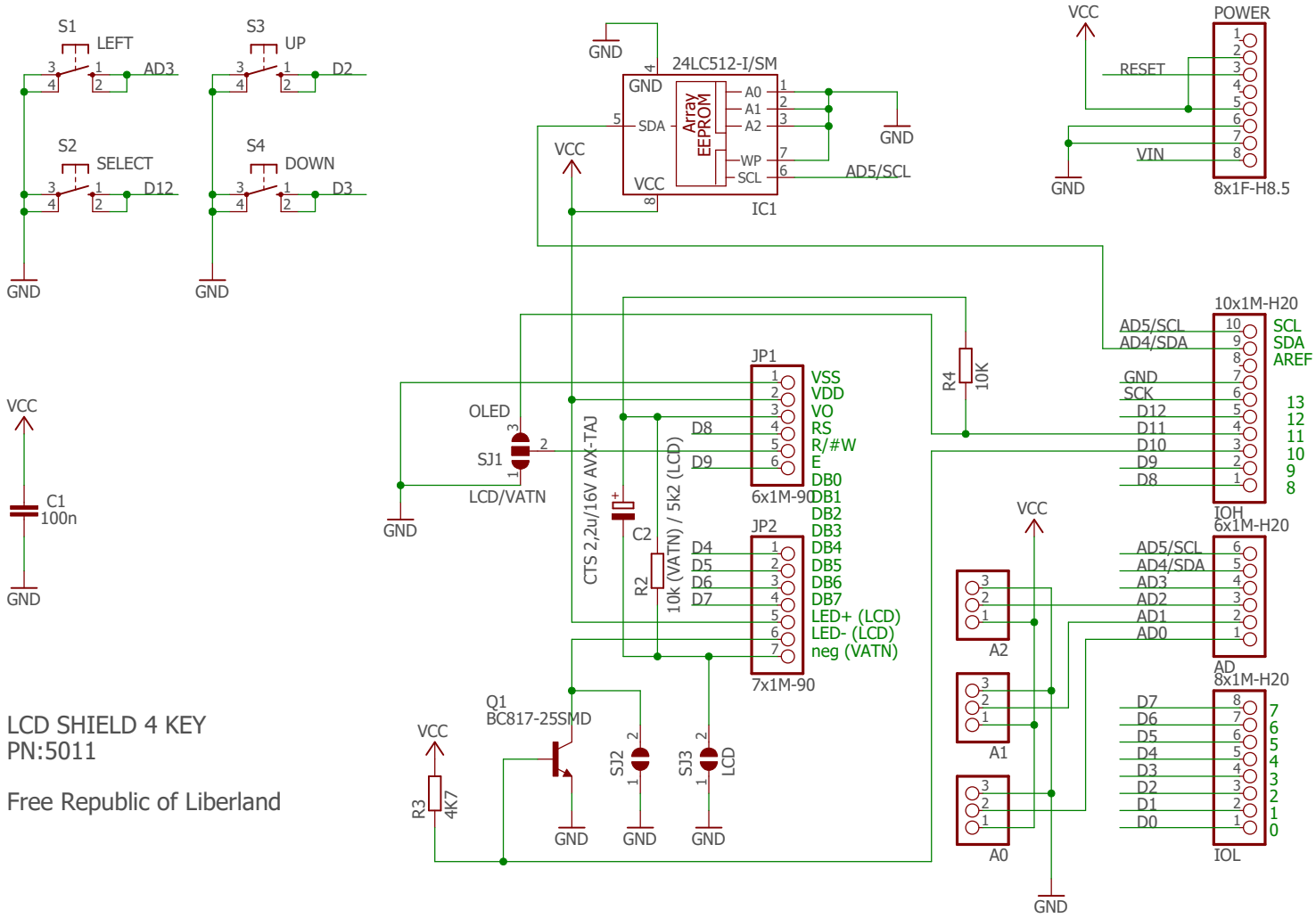

LCD SHIELD 4 KEY
PN:5011

Free Republic of Liberland