2K5 lin

P-745

THESE ARE METAL FILM RESISTORS AT 1% TOLLERANCE

ALL THESE PINS ARE NOT CONNECTED

0= NORMAL
1 = ONE OCTAVE DOWN

MODEL	PERFORMER	REVISION			
DATE	DRAWN BY	DESIGNED BY	DATE		

P-745

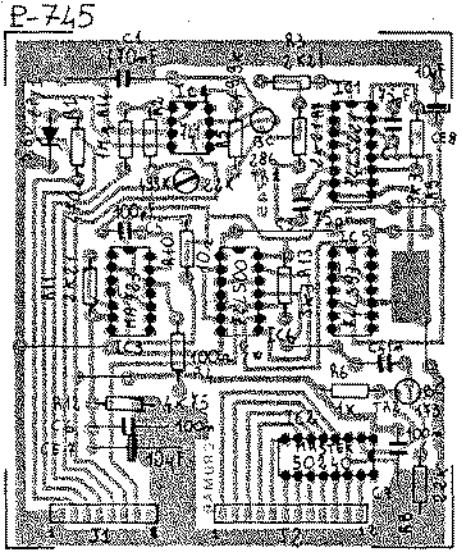

MODEL	PERFORMER	REVISION			
DATE	DRAWN BY	DESIGNED BY	DATE		

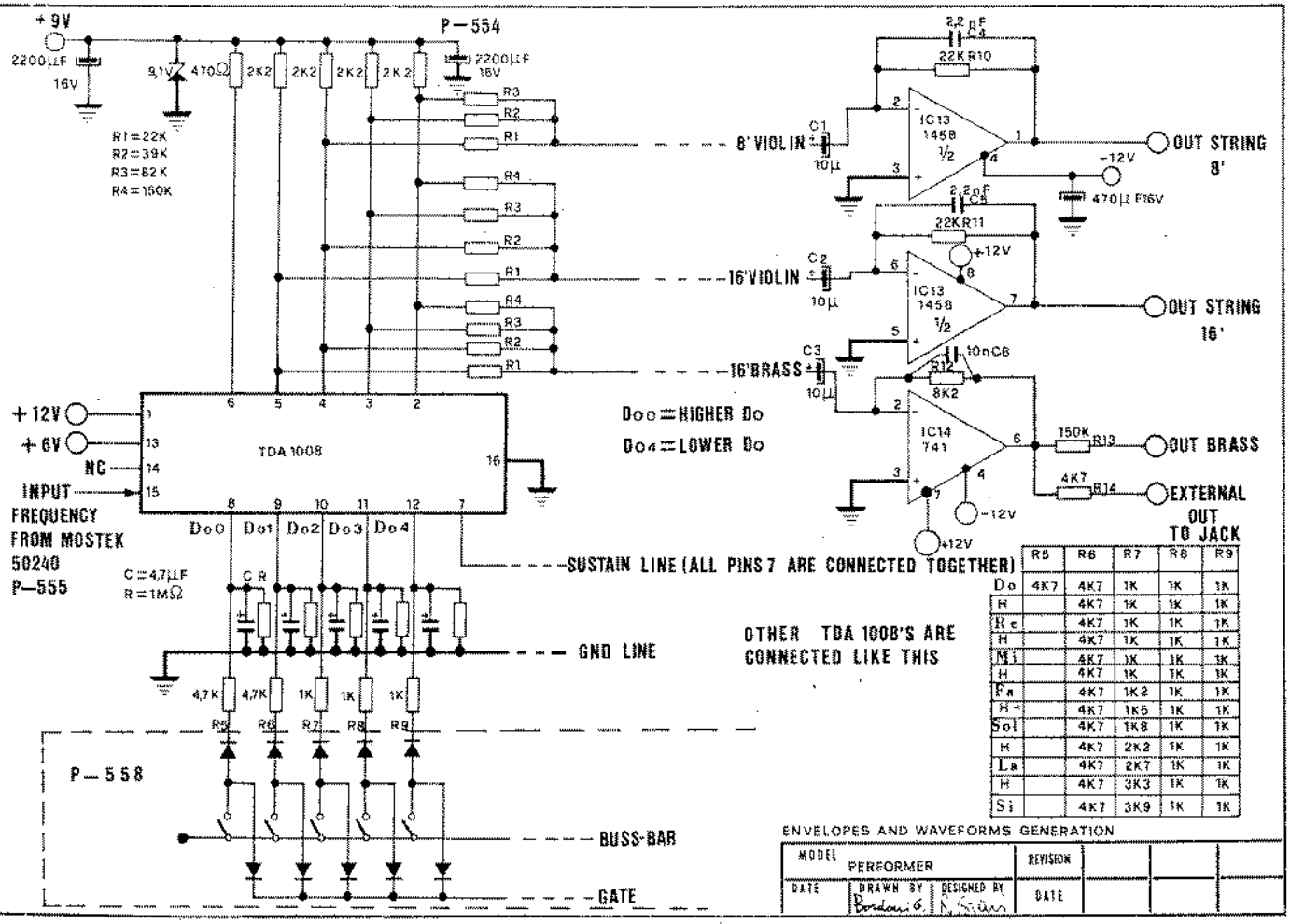

	R5	R6	R7	R8	R9
Do	4K7	4K7	1K	1K	1K
H		4K7	1K	1K	1K
Re		4K7	1K	1K	1K
H		4K7	1K	1K	1K
Mi		4K7	1K	1K	1K
H		4K7	1K	1K	1K
Fa		4K7	1K2	1K	1K
H		4K7	1K5	1K	1K
Sol		4K7	1K8	1K	1K
H		4K7	2K2	1K	1K
La		4K7	2K7	1K	1K
H		4K7	3K3	1K	1K
Si		4K7	3K9	1K	1K

ENVELOPES AND WAVEFORMS GENERATION

MODEL	PERFORMER		REVISION			
DATE	DRAWN BY Bordoni G.	DESIGNED BY [illegible]	DATE			

P—554

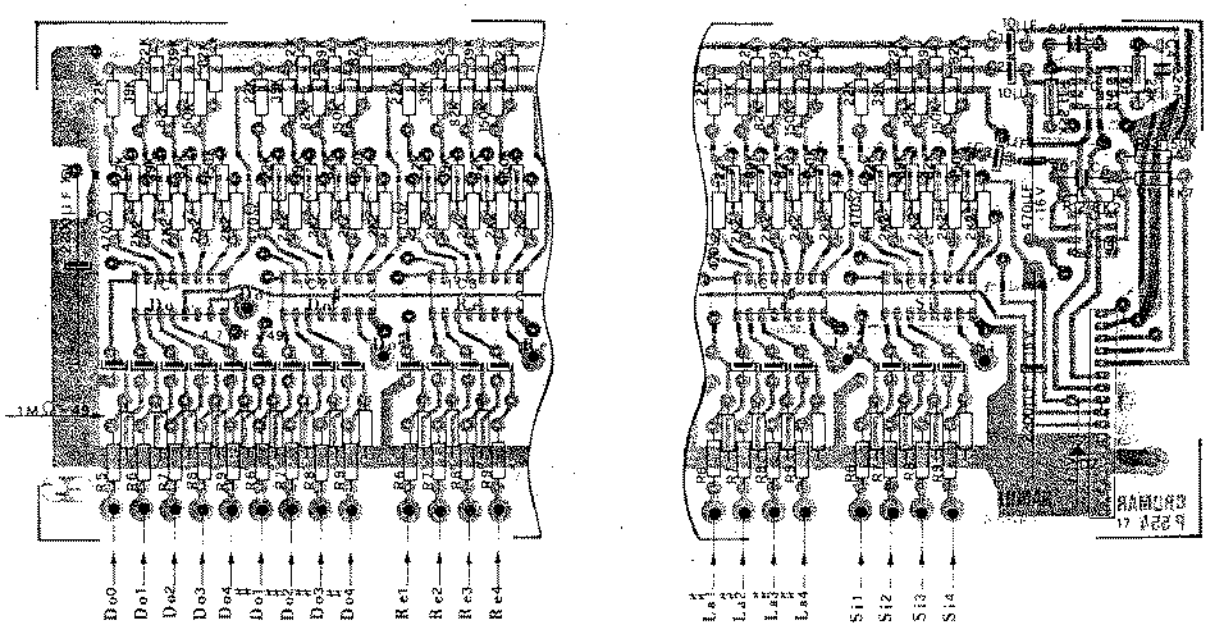

J1				
1	OUT STRING 8'	6	+12 V	FROM 11
2	GND	7	−12 V	TO 17
3	OUT STRING 16'	8	+ 9 V	
4	OUT BRASS	9	SUSTAIN LINE	GND
5	EXT. OUT	10	+ 6.2V	

MODEL	PERFORMER		REVISION			
DATE	DRAWN BY Bordoni G.	DESIGNED BY [illegible]	DATE			

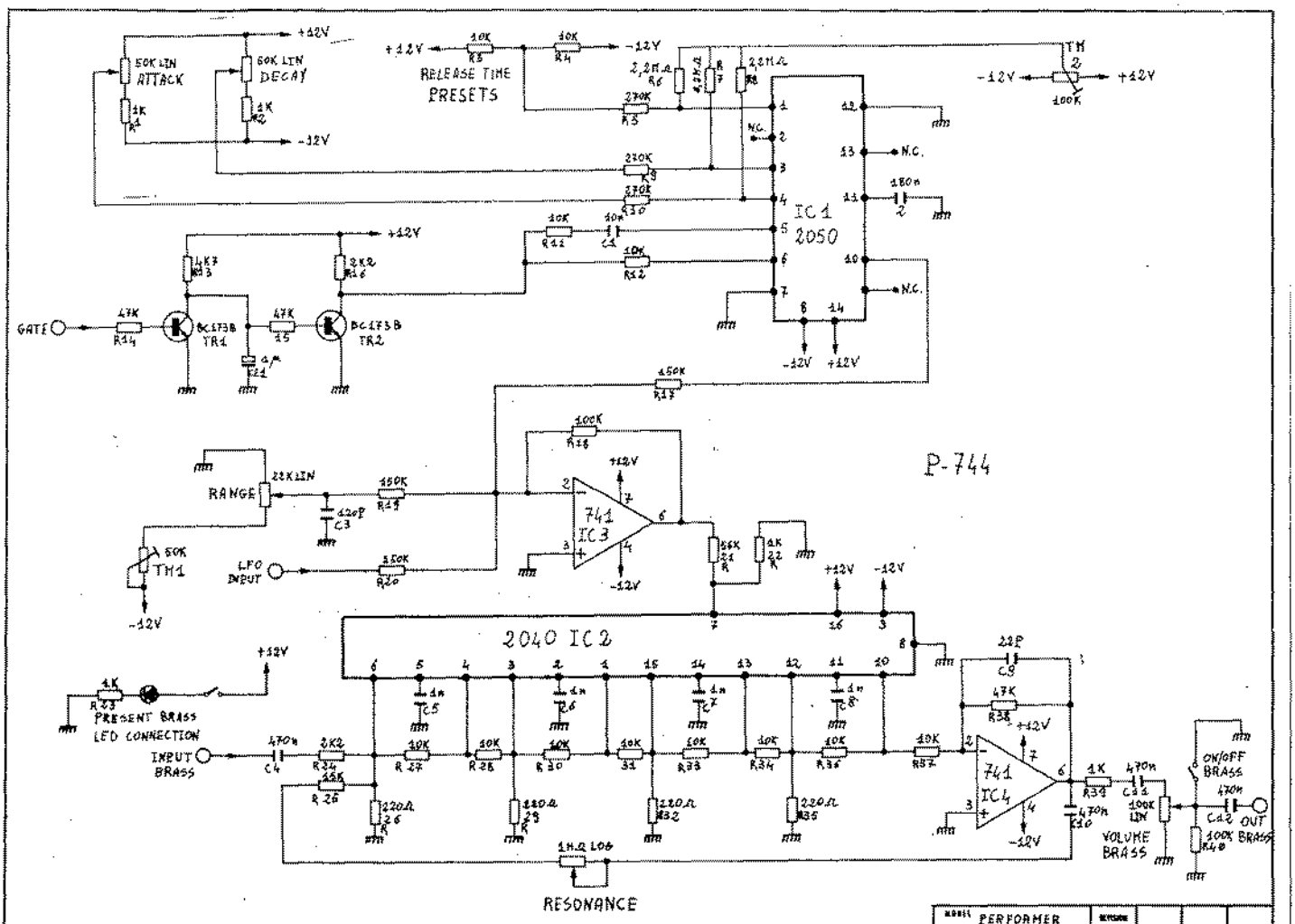

50K LIN ATTACK
50K LIN DECAY
RELEASE TIME PRESETS
IC1 2050
GATE
BC173B TR1
BC173B TR2
RANGE
LFO INPUT
741 IC3
2040 IC2
741 IC4
PRESENT BRASS LED CONNECTION
INPUT BRASS
RESONANCE
VOLUME BRASS
ON/OFF BRASS
OUT BRASS
P-744
MODEL PERFORMER
REVISION
DATE
DRAWN BY
DESIGNED BY

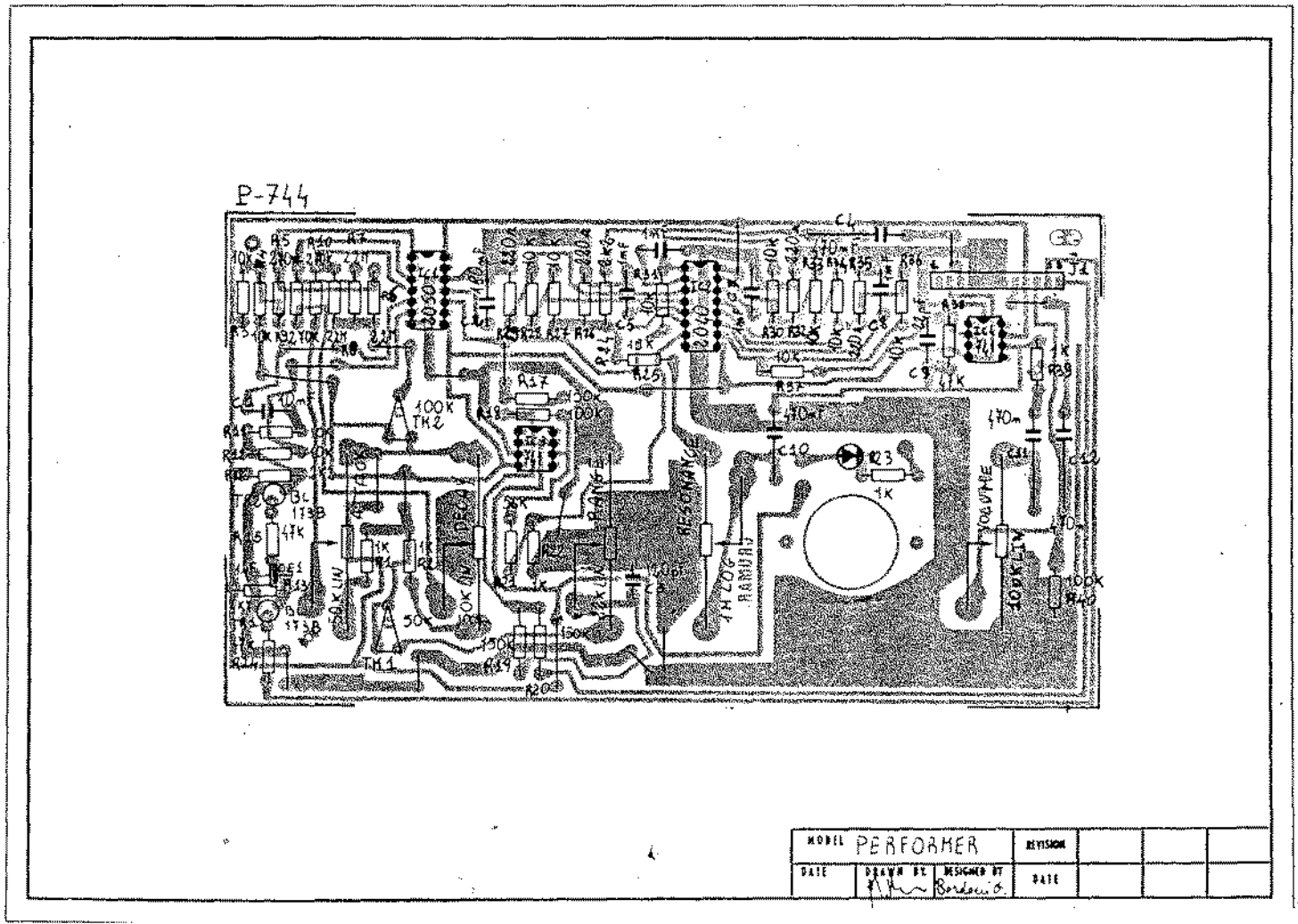

P-744
MODEL PERFORMER
REVISION
DATE
DRAWN BY
DESIGNED BY

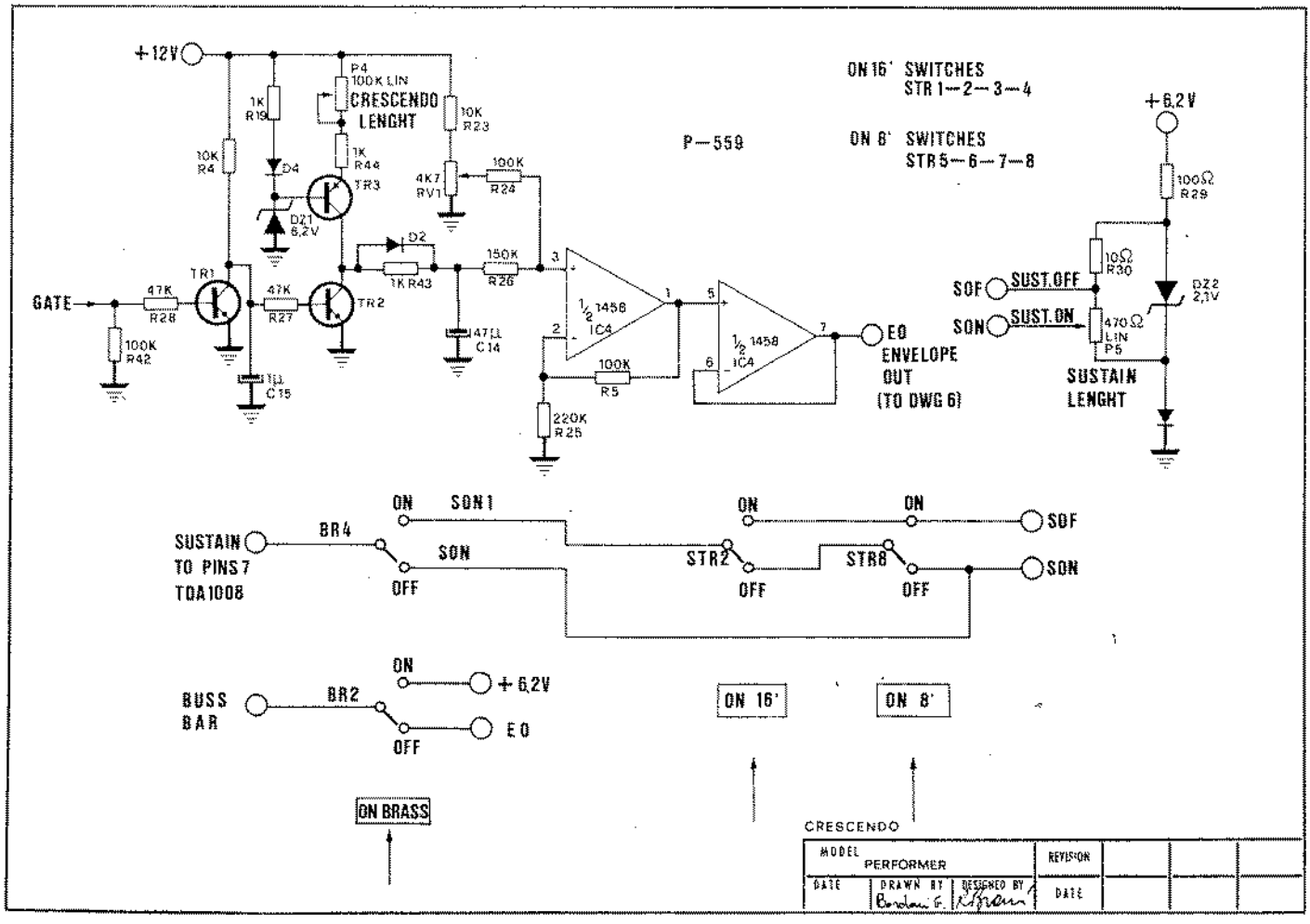
+12V
P4 100K LIN CRESCENDO LENGHT
1K R19
10K R4
D4
TR3
1K R44
4K7 RV1
100K R24
10K R23
DZ1 6,2V
D2
1K R43
150K R26
GATE
47K R28
TR1
47K R27
TR2
100K R42
1µ C15
47µ C14
1/2 1458 IC4
220K R25
100K R5
EO ENVELOPE OUT (TO DWG 6)
P-559
ON 16' SWITCHES STR 1—2—3—4
ON 8' SWITCHES STR 5—6—7—8
+6,2V
100Ω R29
10Ω R30
DZ2 2,1V
SOF
SUST.OFF
SON
SUST.ON
470Ω LIN P5
SUSTAIN LENGHT
SUSTAIN TO PINS 7 TDA1008
BR4
ON
SON1
SON
OFF
STR2
STR8
SOF
SON
BUSS BAR
BR2
+6,2V
EO
ON 16'
ON 8'
ON BRASS
CRESCENDO
MODEL PERFORMER
REVISION
DATE
DRAWN BY
DESIGNED BY
DATE

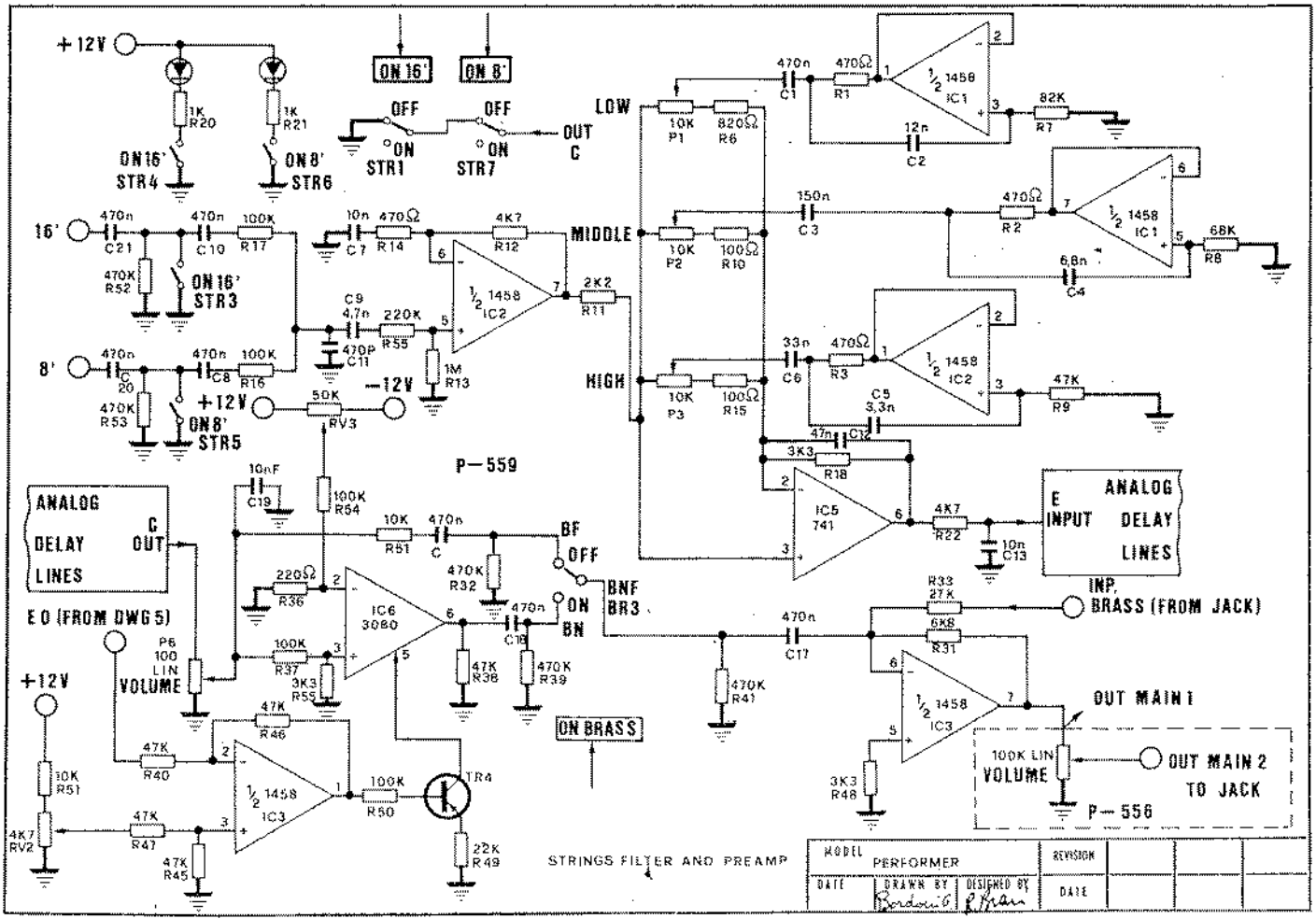
+12V
ON 16'
ON 8'
OFF
ON
STR1
STR7
OUT C
ON16' STR4
ON8' STR6
LOW
MIDDLE
HIGH
16'
8'
ON16' STR3
ON8' STR5
+12V
-12V
50K RV3
P-559
ANALOG DELAY LINES
C OUT
E INPUT
ANALOG DELAY LINES
BF
OFF
BNF BR3
ON BN
EO (FROM DWG 5)
P6 100 LIN VOLUME
INP. BRASS (FROM JACK)
OUT MAIN 1
100K LIN VOLUME
OUT MAIN 2 TO JACK
P-556
ON BRASS
STRINGS FILTER AND PREAMP
MODEL PERFORMER
REVISION
DATE
DRAWN BY
DESIGNED BY
DATE

BRASS SWITCH

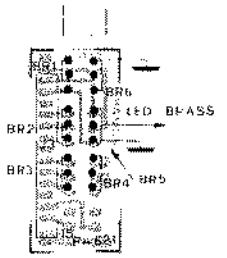

		J3
	1	BR1
	2	BR6
	3	NC
BR2	4	EO
	5	BUSS BAR
	6	+6.2V
	7	NC
BR3	8	BF
	9	BNF
	10	BN
	11	NC
	12	SON
BR4	13	SON1
	14	SUSTAIN
	15	NC

	J4	
1	NC	
2	SON1	STR2
3	SOF	
4	LED 16'	STR4
5	ON 16'	STR3
6	GND	
7	ON 8'	STR5
8	LED 8'	STR6
9	SON	STR8
10	SON	

STRING SWITCH

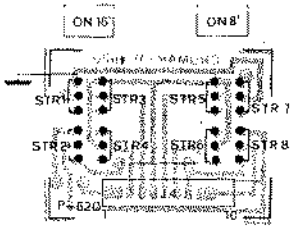

	J1		J2
1	E INPUT	1	EO
2	GND	2	GATE
3	-12 V	3	SON
4	+12 V	4	SOF
5	LED 16'	5	OUT MAIN 1
6	LED 8'	6	INP BR FROM JACK
7	ON 8'	7	C OUT
8	ON 16'	8	GND
9	GND	9	+6.2V
10	INP STRING 8'	10	GND
11	GND	11	BNF
12	INP STRING 16'	12	GND
		13	BF
		14	GND
		15	BN

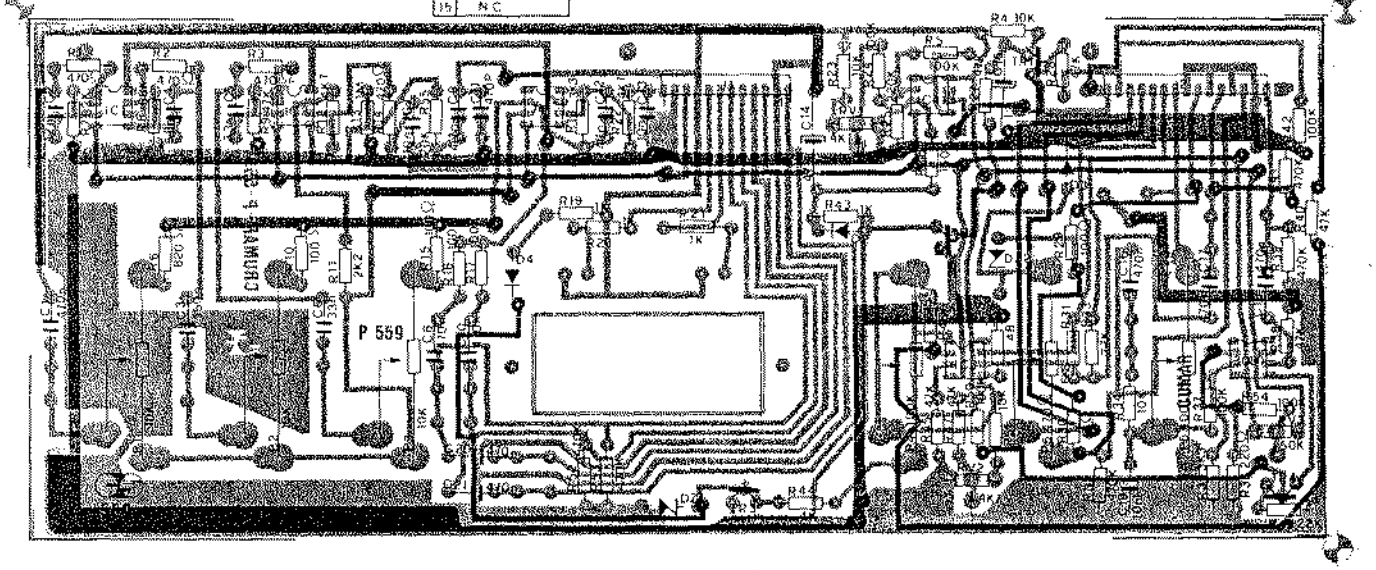

CRESCENDO STRING FILTERAND PREAMP.

MODEL PERFORMER		REVISION			
DATE	DRAWN BY / DESIGNED BY	DATE			

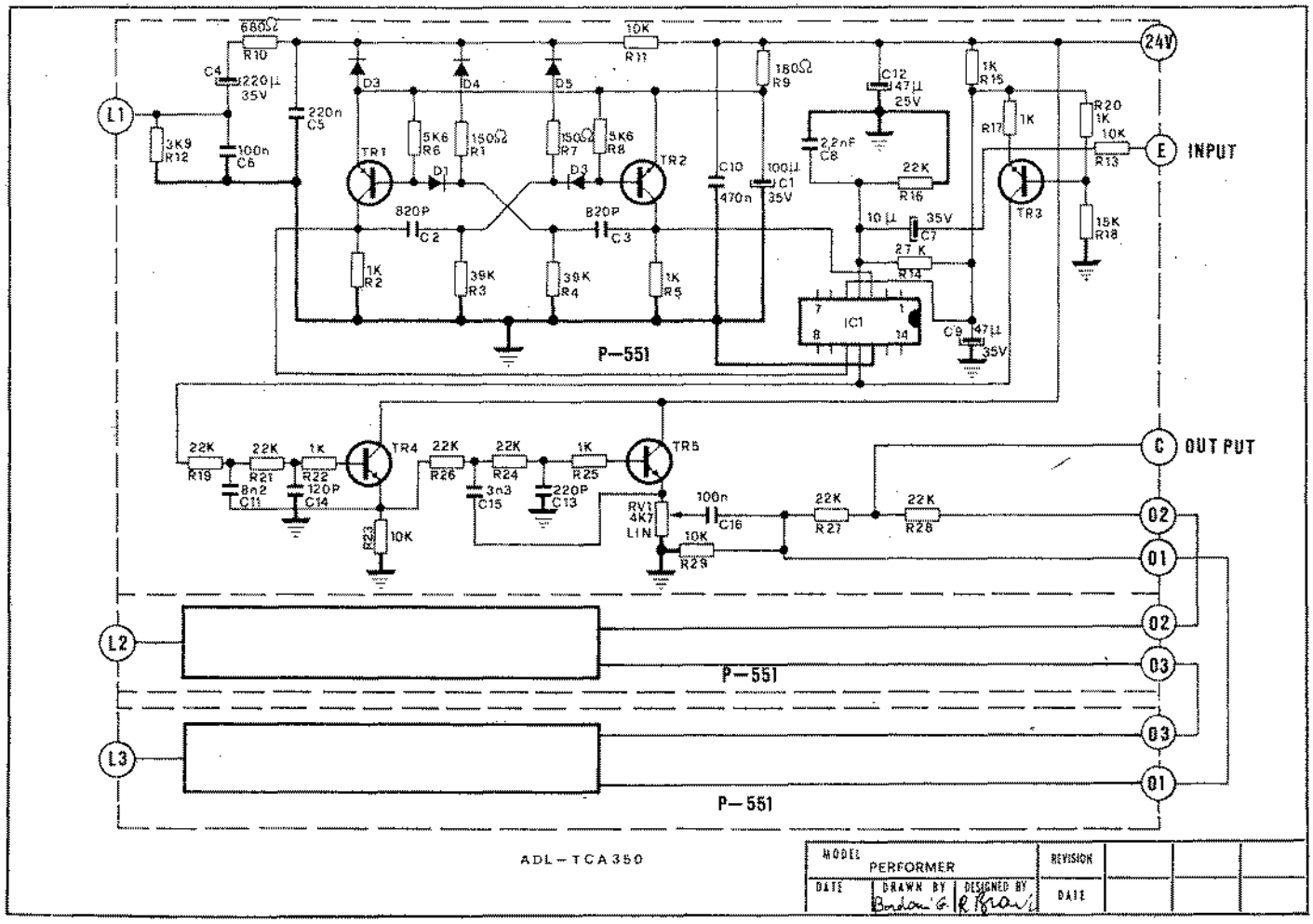

24V
INPUT
OUT PUT
P—551
P—551
P—551
ADL—TCA 350
MODEL PERFORMER
REVISION
DATE
DRAWN BY
DESIGNED BY

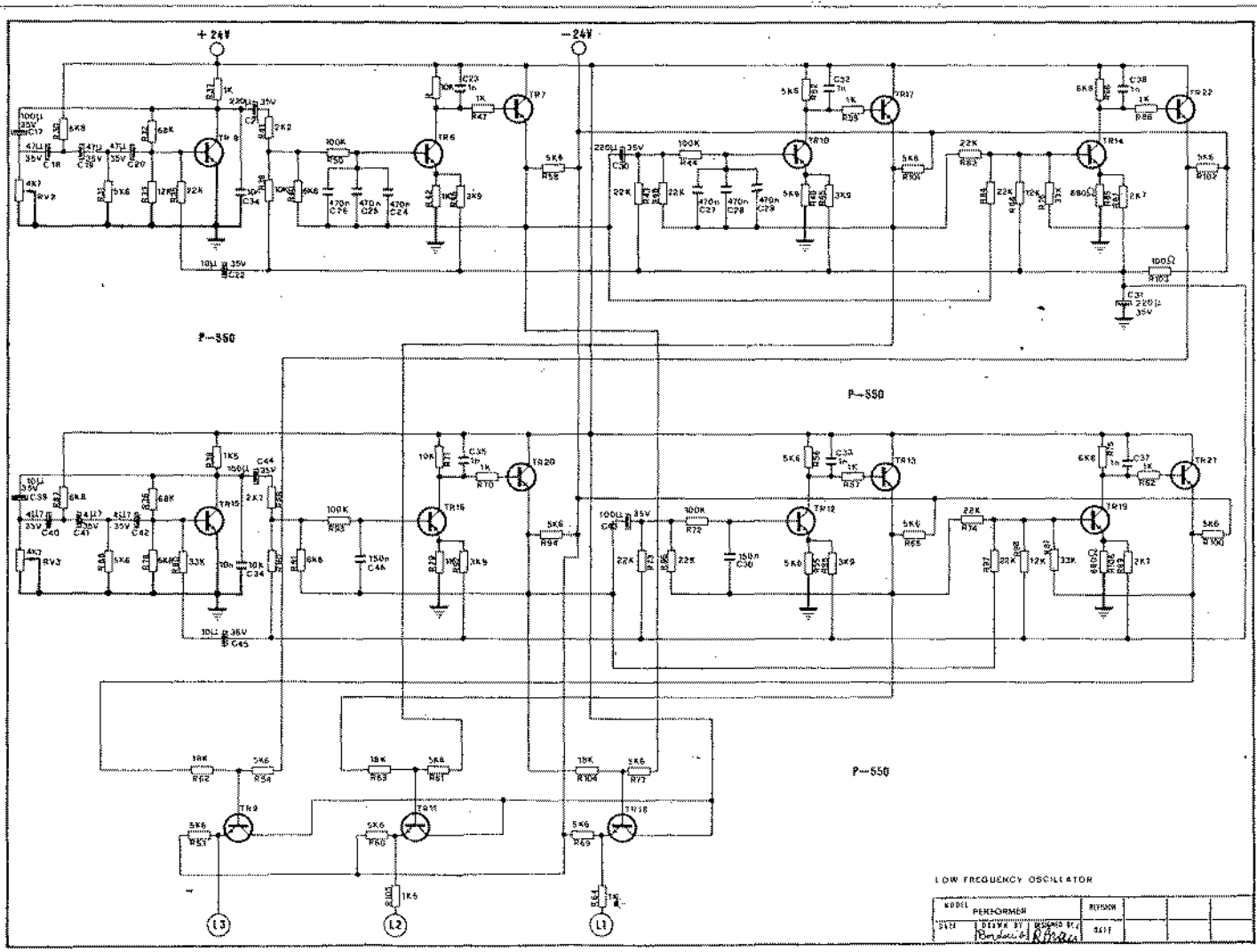

+24V
−24V
P—550
P—550
P—550
LOW FREQUENCY OSCILLATOR
MODEL PERFORMER
REVISION
DATE
DRAWN BY
DESIGNED BY

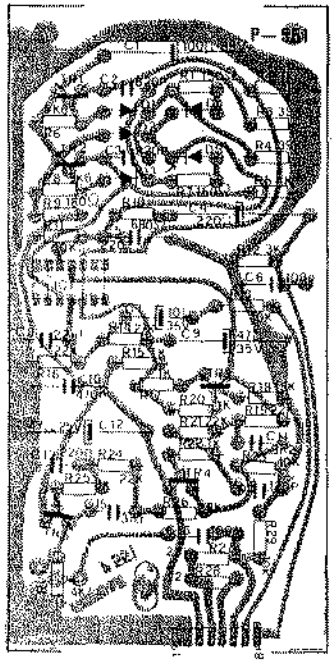

J1A		J1B		J1C		J2	
1	GND	1	GND	1	GND	1	GND
2	GND	2	GND	2	GND	2	GND
3	+24V	3	+24V	3	+24V	3	GND
4	C	4	C	4	C	4	+24V
5	01	5	02	5	03	5	-24V
6	02	6	03	6	01	6	L1
7	E	7	E	7	E	7	L2
8	L1	8	L2	8	L3	8	L3

J3	
1	GND
2	+24V
3	C=OUT
4	GND
5	E= INP
6	-24V

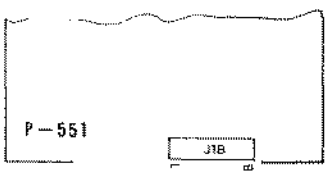

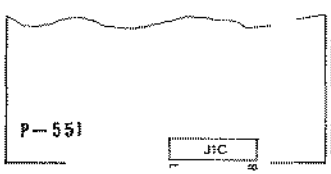

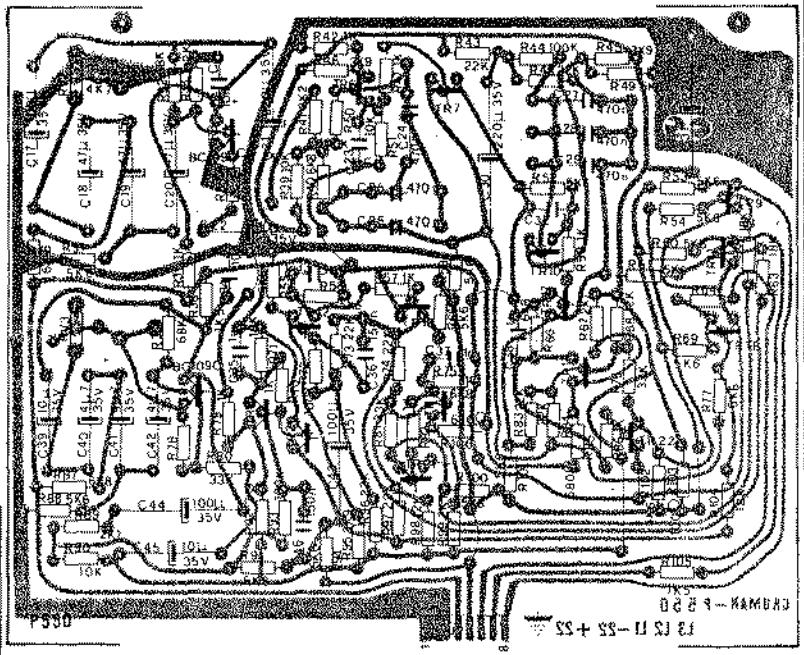

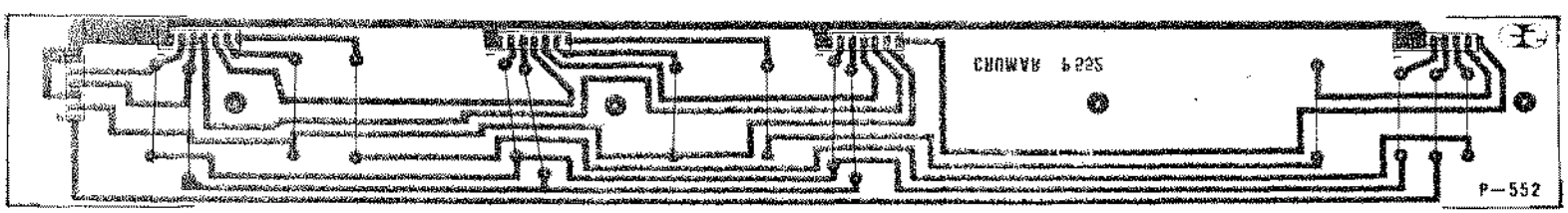

ADL-TCA LOW FREQUENCY OSCILLATOR
350

MODEL PERFORMER			REVISION			
DATE	DRAWN BY	DESIGNED BY	DATE			

NB: OUT F.M. DOES NOT PASS THROUGH OUTPUT CONNECTOR

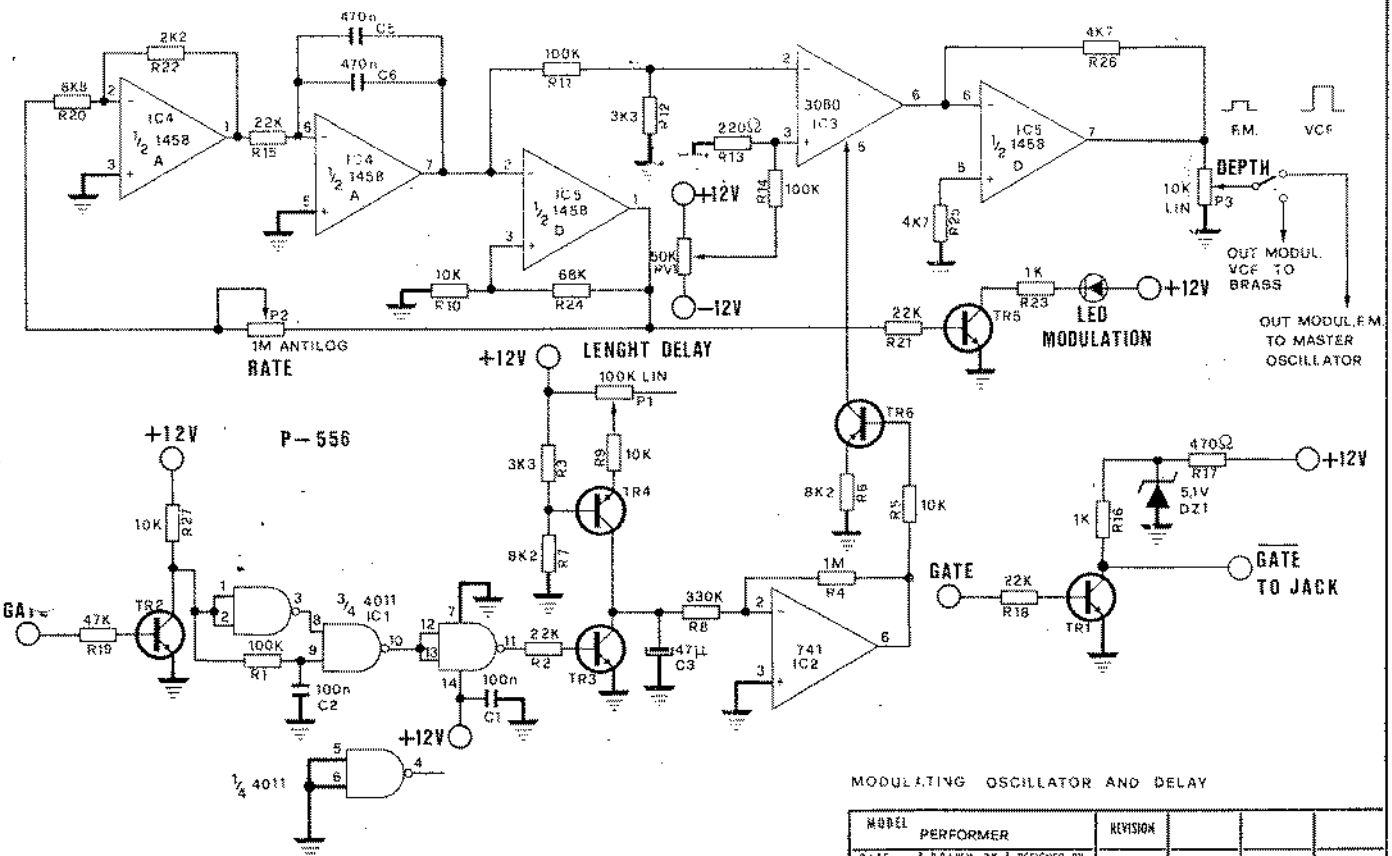

MODULATING OSCILLATOR AND DELAY

MODEL	PERFORMER		REVISION			
DATE	DRAWN BY Bordoni G.	DESIGNED BY R. Brau	DATE			

J1	
1	-12 V
2	+12 V
3	MOD. OUT
4	GND
5	OUT MAIN 1
6	GND
7	OUT MAIN 2
8	GND
9	GND
10	GND
11	GATE
12	GATE

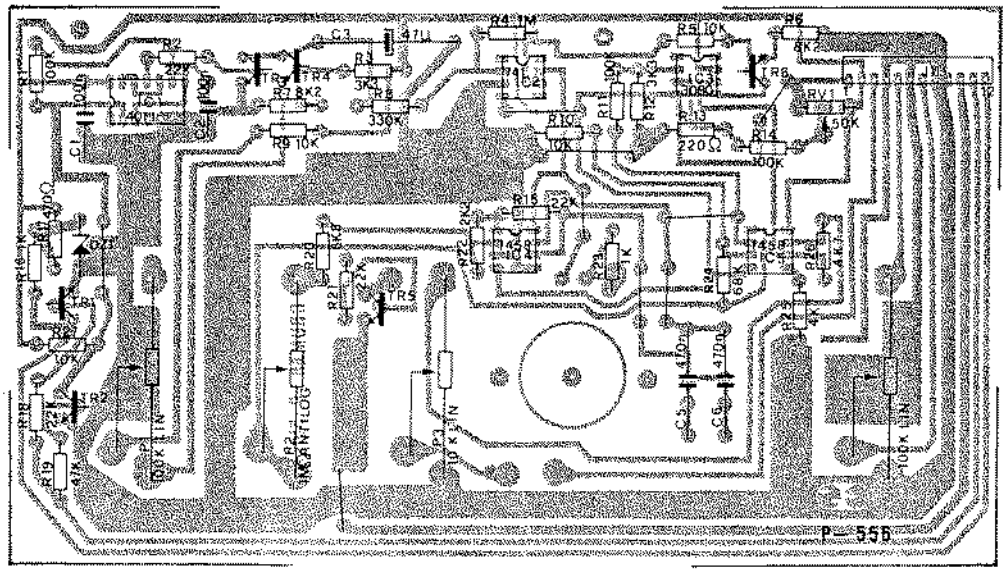

FOR OUT MAIN 1 AND OUT MAIN 2 SEE P-559

MODEL	PERFORMER		REVISION			
DATE	DRAWN BY Bordoni G.	DESIGNED BY R. Brau	DATE			

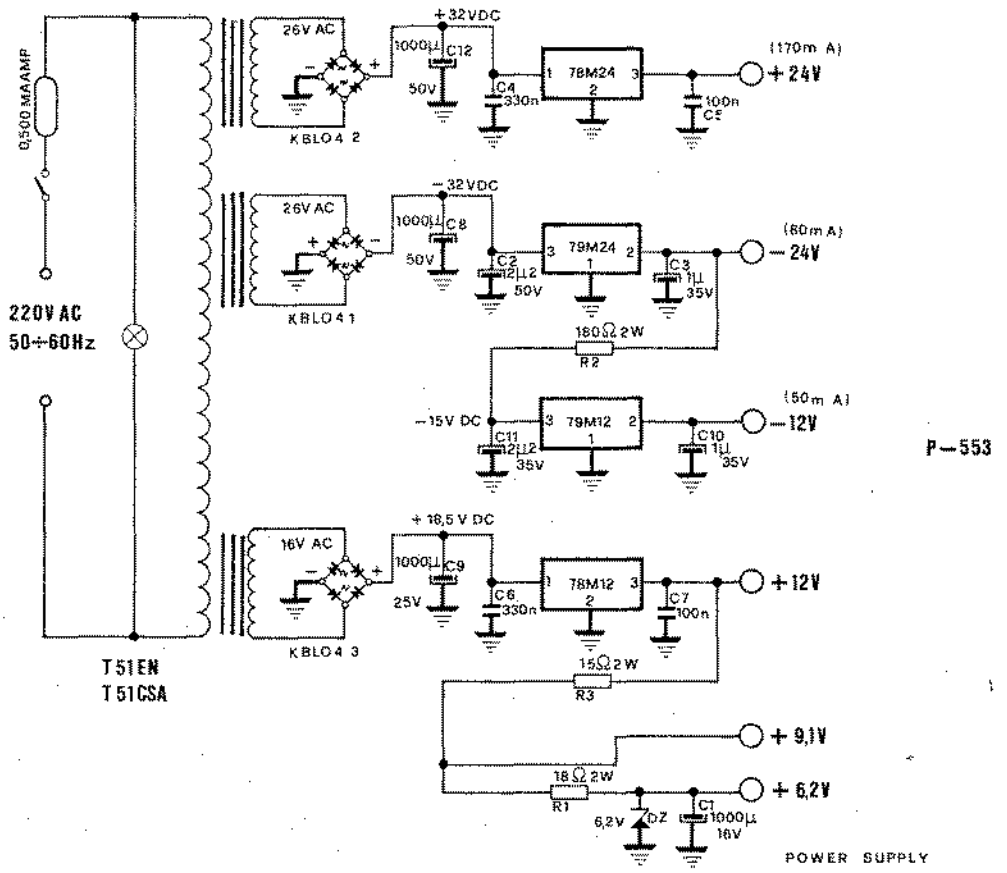
0,500 MAAMP
220V AC
50÷60Hz
T51EN
T51CSA
26V AC
KBLO4 2
+32VDC
1000µ C12
50V
78M24
C4 330n
100n C5
(170m A)
+24V
26V AC
KBLO4 1
−32VDC
1000µ C8
50V
79M24
C2 2µ2 50V
C3 1µ 35V
(60m A)
−24V
180Ω 2W
R2
−15V DC
79M12
C11 2µ2 35V
C10 1µ 35V
(50m A)
−12V
16V AC
KBLO4 3
+16,5 V DC
1000µ C9
25V
78M12
C6 330n
C7 100n
+12V
15Ω 2W
R3
+9,1V
18Ω 2W
R1
6,2V DZ
C1 1000µ 16V
+6,2V
POWER SUPPLY
P—553
MODEL PERFORMER
REVISION
DATE
DRAWN BY
DESIGNED BY
DATE

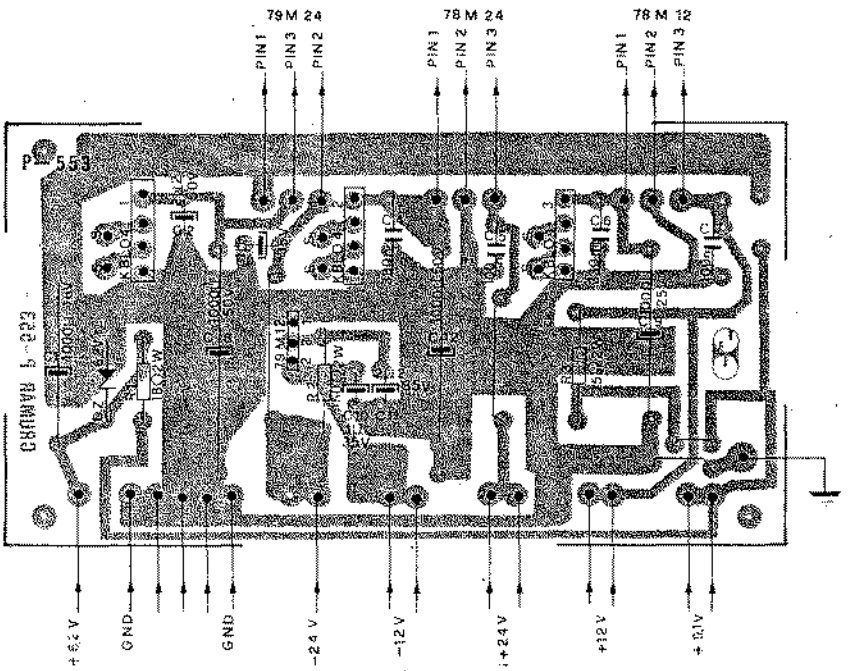
79M 24
78M 24
78M 12
PIN 1
PIN 2
PIN 3
P 553
+6,2 V
GND
GND
−24 V
−12 V
+24 V
+12 V
+9,1V
MODEL PERFORMER
REVISION
DATE
DRAWN BY
DESIGNED BY
DATE

PART LIST

P 555 - (MASTER OSCILLATOR)

IC 1	74LS221
IC 2	50240
IC 3	723
IC 4	741
TR 1	BC286
TR 2	BC173

P 554 - (WAVEFORMS GENERATION)

da IC 1 a IC 12	TDA1008
IC 13	1458
IC 14	741

P. 557 - (BRASS FILTER)

da TR 1 a TR 13	BC209C
TR 14	BC204
TR 15 e TR 16	BC209

P 559 - (STRING FILTER)

da IC 1 a IC 4	1458
IC 5	741
IC 6	3080
TR 1 e TR 2	BC209
TR 3 e TR 4	BC204

P 550 - (LFO FOR ANALOG DELAY LINES)

TR 8 e TR 15	BC209C
TR 6 e TR 7	BC209
da TR 9 a TR 14	BC209
da TR 16 a TR 22	BC209

P 551 - (ANALOG DELAY LINES)

da TR 1 a TR 3	BC204
TR 4 e TR 5	BC209C

P 556 - (MODULATION)

IC 1	4011
IC 2	741
IC 3	3080
IC 4 e IC 5	1458
da TR 1 a TR 3	BC209
TR 4 e TR 6	BC204
TR 5	BC209

CROSS REFERENCE GUIDE

TRANSISTOR

1)BC286è

BC286	FAIRCHILD -SGS
BD371	NATIONAL SEMICONDUCTOR

2) BC209B/Cè

BC173B/C	ITT
BC239B/C	NATIONAL SEMICONDUCTOR
BC239BS/CS	MISTRAL
BC549B/C	PHILIPS

3) BC204B/Cè

BC308B/C	MISTRAL - TELEFUNKEN
BC204VI	MISTRAL - TELEFUNKEN (solo tipo B)
BC205B/C	NATIONAL SEMICONDUCTOR

INTEGRATED CIRCUIT

1) 74LS221è

SN74LS221	TEXAS INSTRUMENT
74LS221	FAIRCHILD

2) 50240è

MK50240	MOSTEK

3) 723è

uA723	FAIRCHILD
LM723	NATIONAL SEMICONDUCTOR

4) 741è

uA741	FAIRCHILD
LM741	NATIONAL SEMICONDUCTOR
SN72741	TEXAS INSTRUMENT
MC741	MOTOROLA

5) TDA 1008 — PHILIPS

6) 1458è

uA1458	FAIRCHILD
LM1458	NATIONAL SEMICONDUCTOR
MC1458	MOTOROLA

7) 3080è

LM3080	NATIONAL SEMICONDUCTOR
CA3080	RCA

8) 4011è

4011	FAIRCHILD
CD4011	NATIONAL SEMICONDUCTOR - MOTOROLA - RCA

- All components mentioned in this enclosed « PART LIST » are on stock at CRUMAR'S

BLOCK DIAGRAM

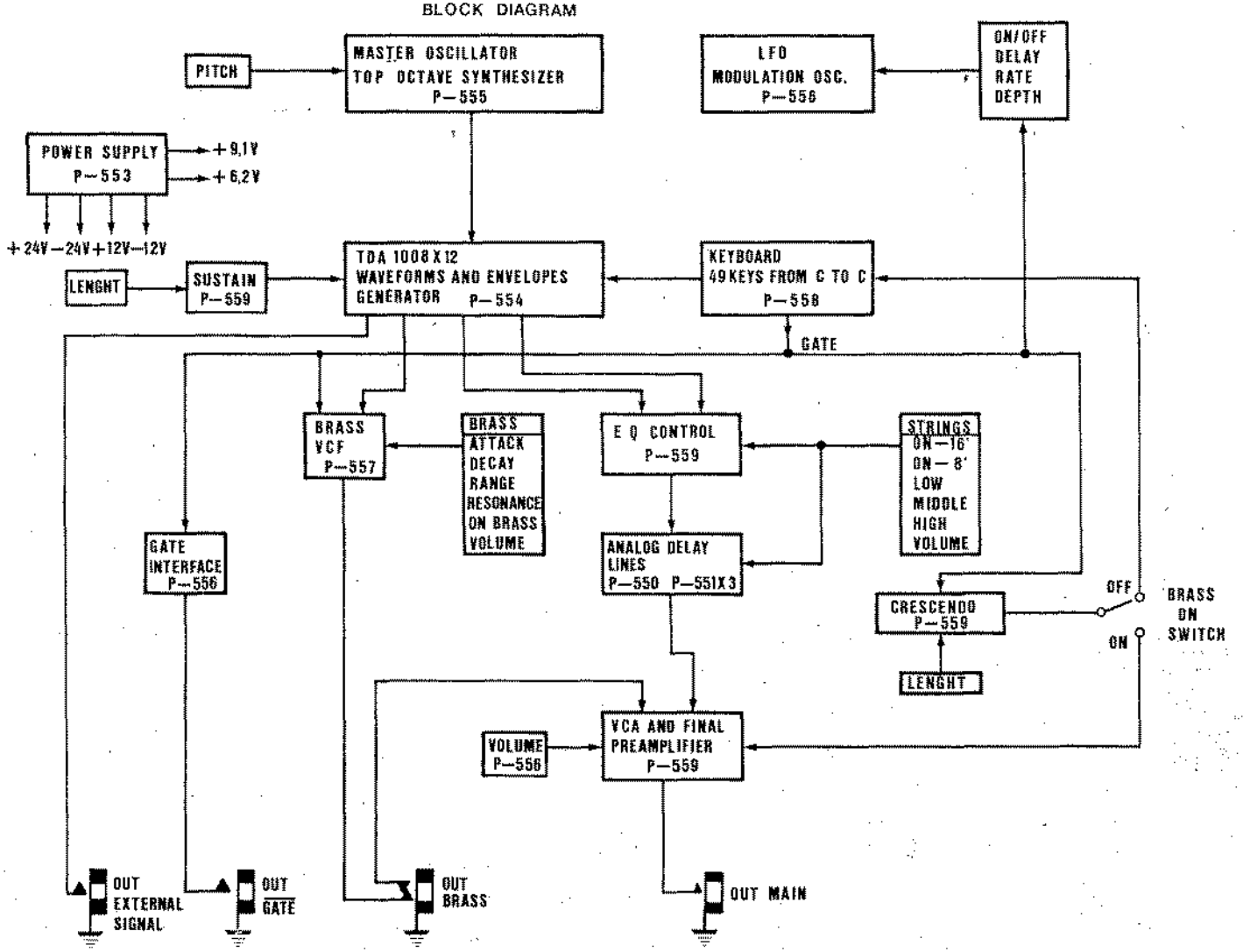

MODEL	PERFORMER			REVISION			
DATE	DRAWN BY	DESIGNED BY		DATE			