Title

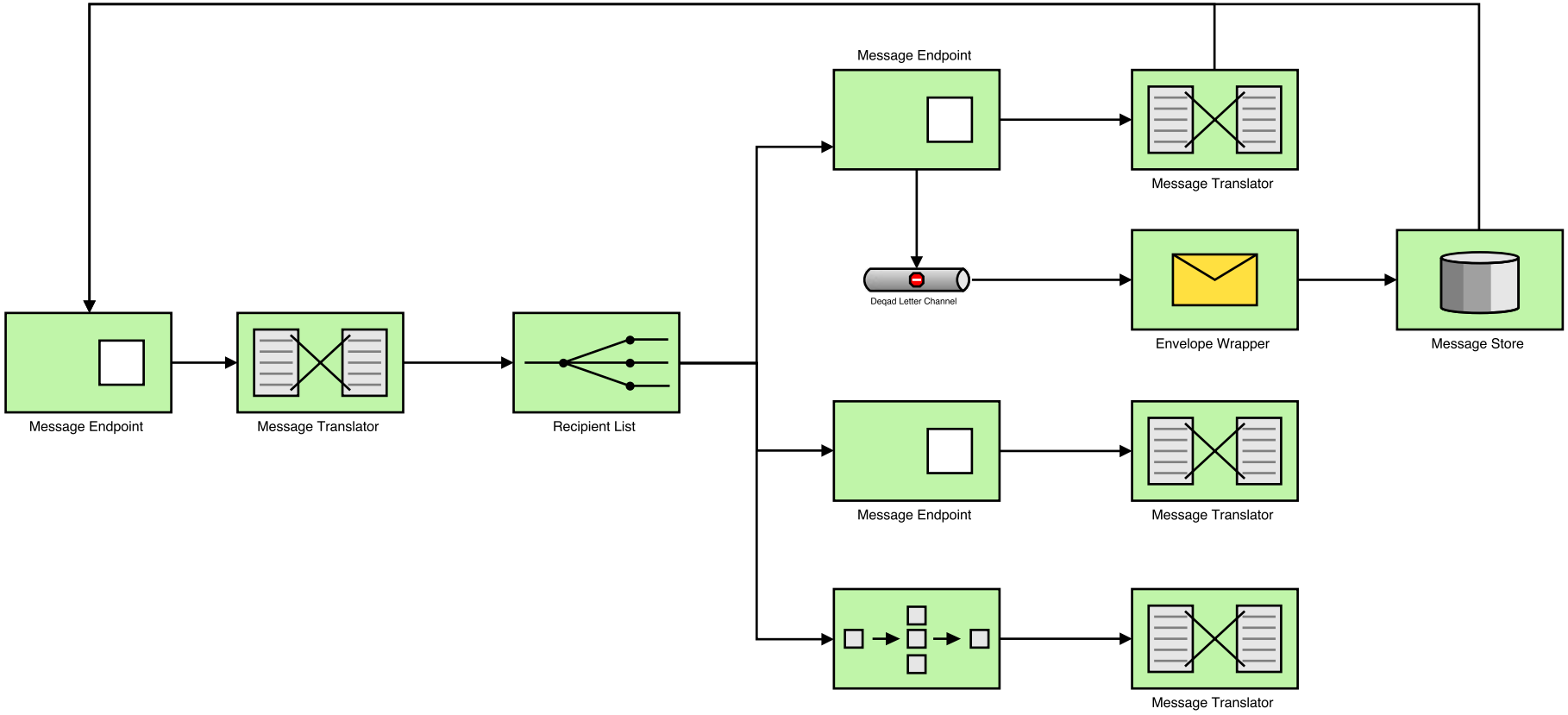
Message Endpoint
Message Translator
Recipient List
Message Endpoint
Message Translator
Dead Letter Channel
Envelope Wrapper
Message Store
Message Endpoint
Message Translator
Message Translator