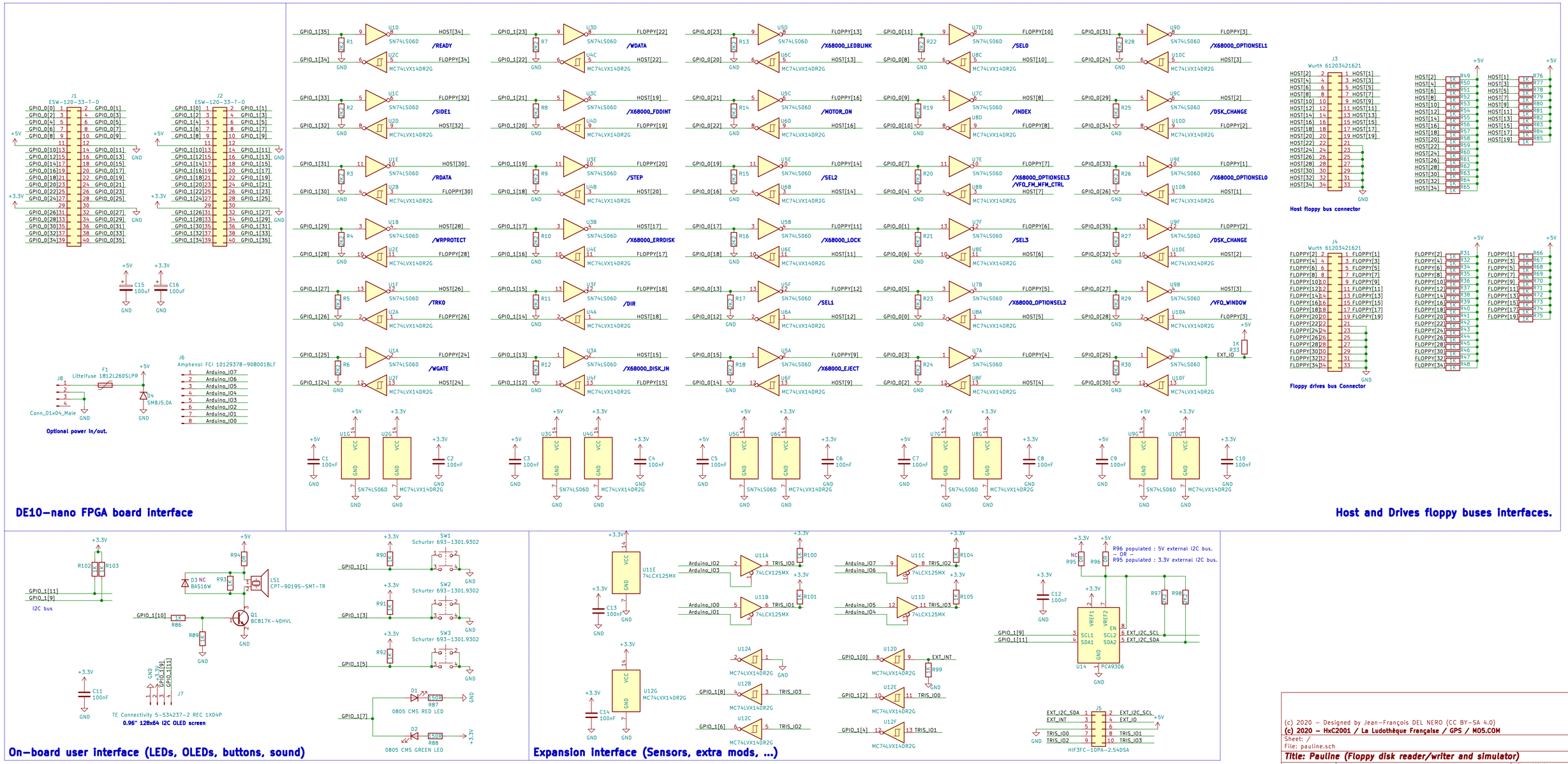
DE10-nano FPGA board interface
Host and Drives floppy buses interfaces.
Optional power in/out.
Host floppy bus connector
Floppy drives bus Connector
On-board user interface (LEDs, OLEDs, buttons, sound)
Expansion interface (Sensors, extra mods, ...)
0.96" 128x64 I2C OLED screen
0805 CMS RED LED
0805 CMS GREEN LED
I2C bus
R96 populated : 5V external I2C bus.
-- OR --
R95 populated : 3.3V external I2C bus.
(c) 2020 - Designed by Jean-François DEL NERO (CC BY-SA 4.0)
(c) 2020 - HxC2001 / La Ludothèque Française / GPS / MO5.COM
Sheet: /
File: pauline.sch
Title: Pauline (Floppy disk reader/writer and simulator)
Size: User
Date: 2020-07-18
Rev: V1.1
KiCad E.D.A. eeschema 5.1.6-c6e7f7d87ubuntu18.04.1
Id: 1/1