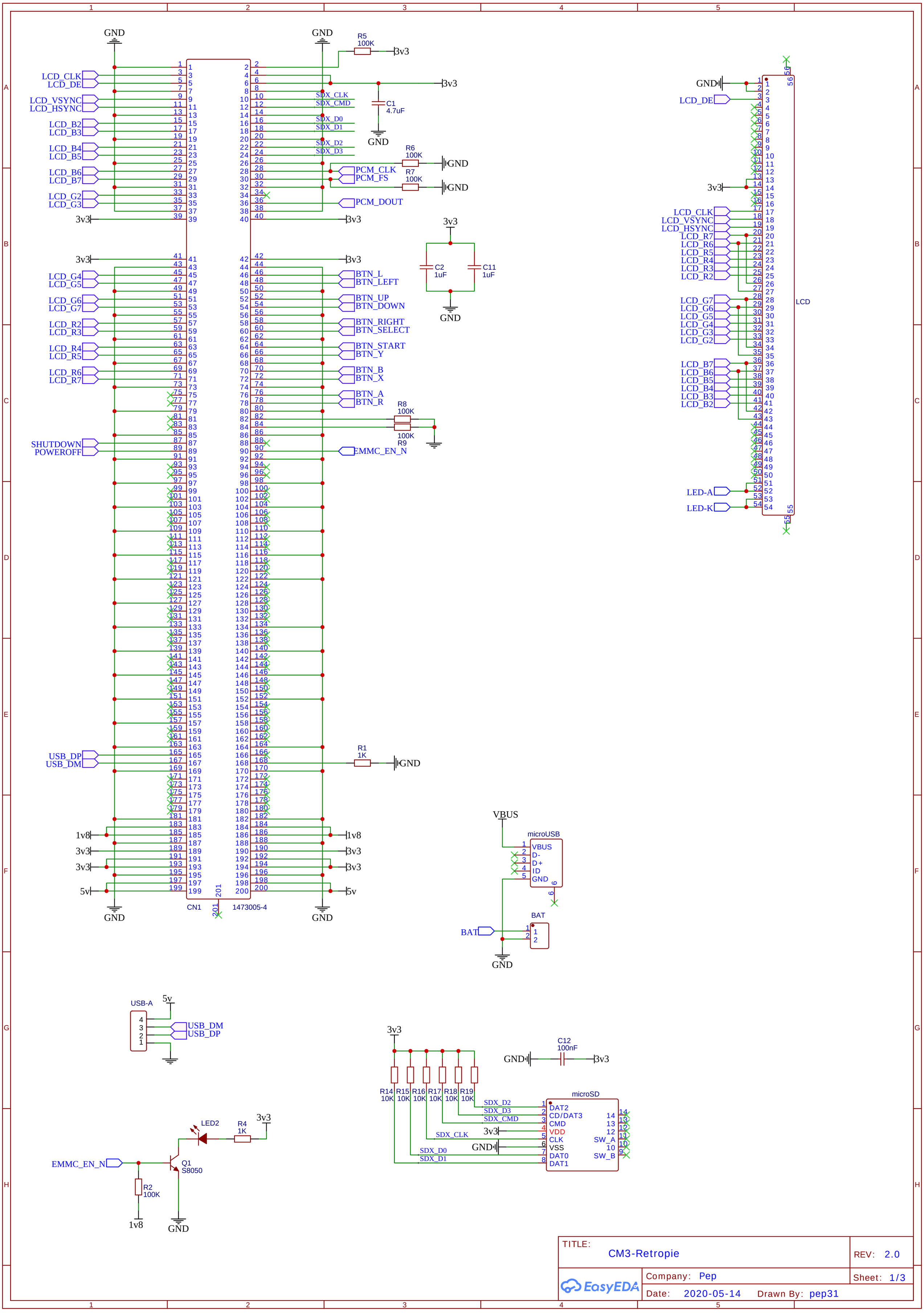
GND
3v3
R5
100K
C1
4.7uF
R6
100K
R7
100K
R8
100K
R9
100K
R1
1K
C2
1uF
C11
1uF
C12
100nF
LCD_CLK
LCD_DE
LCD_VSYNC
LCD_HSYNC
LCD_B2
LCD_B3
LCD_B4
LCD_B5
LCD_B6
LCD_B7
LCD_G2
LCD_G3
LCD_G4
LCD_G5
LCD_G6
LCD_G7
LCD_R2
LCD_R3
LCD_R4
LCD_R5
LCD_R6
LCD_R7
SHUTDOWN
POWEROFF
SDX_CLK
SDX_CMD
SDX_D0
SDX_D1
SDX_D2
SDX_D3
PCM_CLK
PCM_FS
PCM_DOUT
BTN_L
BTN_LEFT
BTN_UP
BTN_DOWN
BTN_RIGHT
BTN_SELECT
BTN_START
BTN_Y
BTN_B
BTN_X
BTN_A
BTN_R
EMMC_EN_N
USB_DP
USB_DM
1v8
5v
CN1
1473005-4
LCD
LED-A
LED-K
VBUS
microUSB
D-
D+
ID
GND
BAT
USB-A
LED2
R4
1K
Q1
S8050
R2
100K
R14
10K
R15
10K
R16
10K
R17
10K
R18
10K
R19
10K
microSD
DAT2
CD/DAT3
CMD
VDD
CLK
VSS
DAT0
DAT1
SW_A
SW_B
TITLE:
CM3-Retropie
REV: 2.0
Company: Pep
Sheet: 1/3
Date: 2020-05-14
Drawn By: pep31
EasyEDA

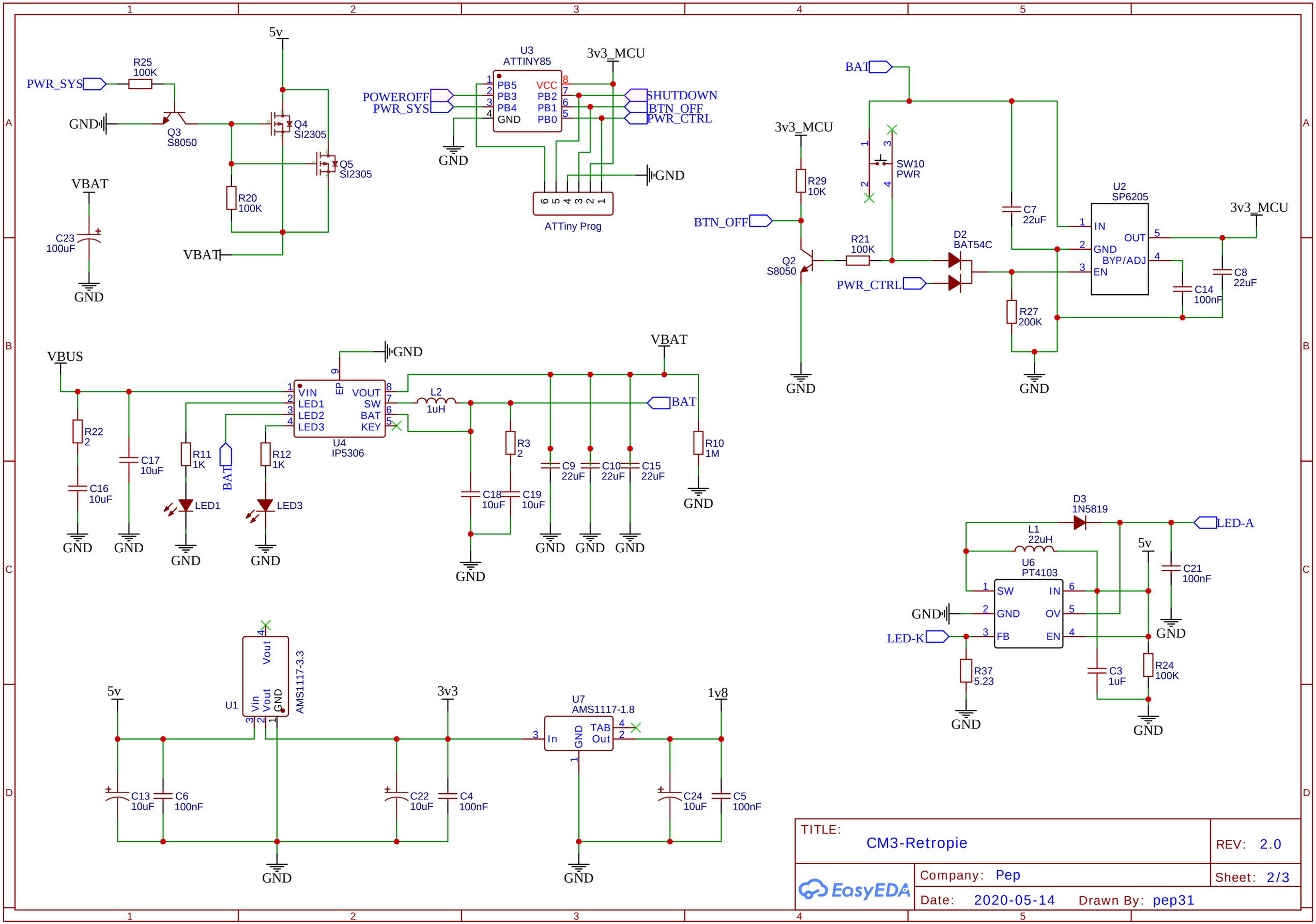

TITLE: CM3-Retropie	REV: 2.0
EasyEDA	Company: Pep
	Sheet: 2/3
	Date: 2020-05-14 Drawn By: pep31

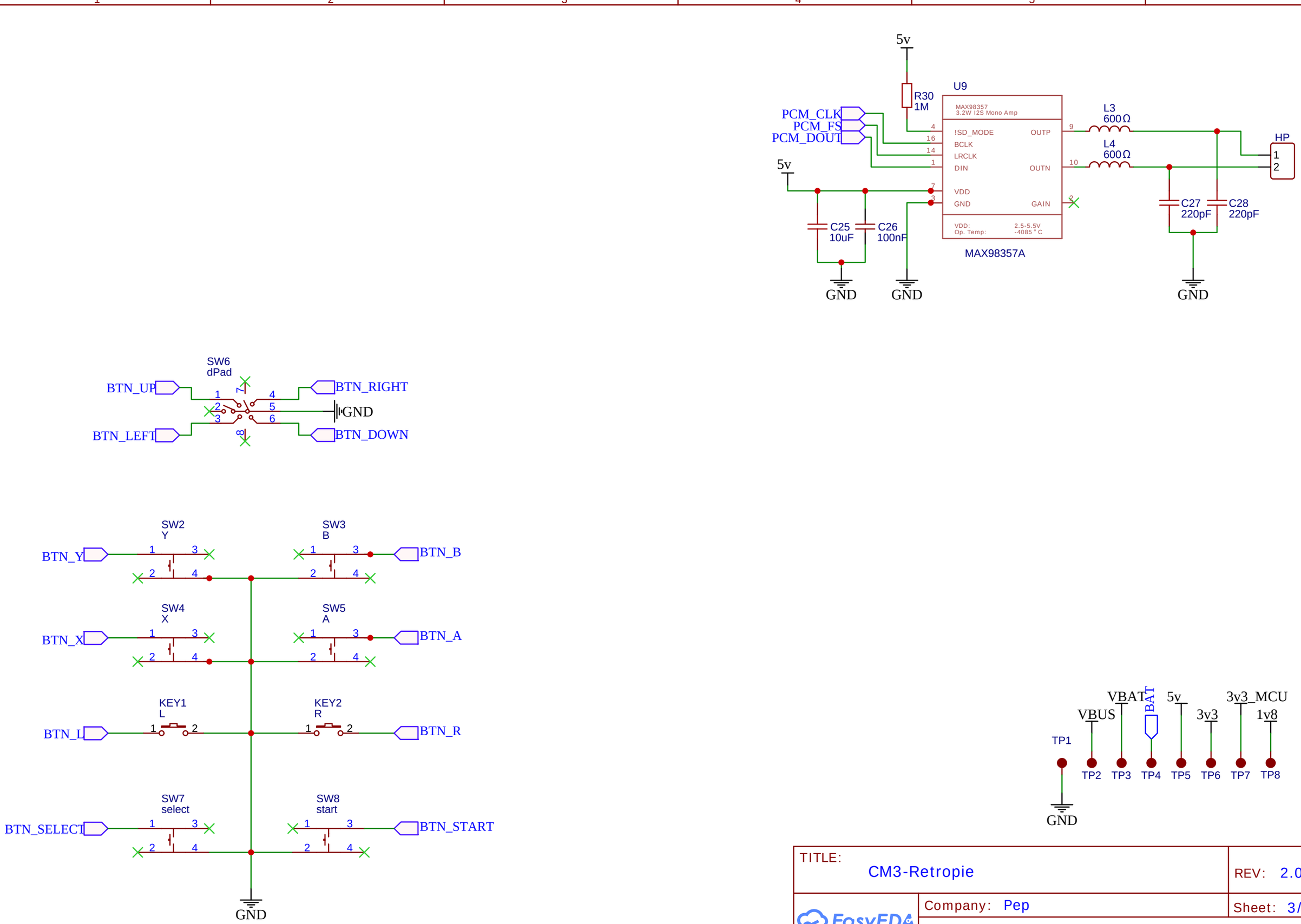

TITLE: CM3-Retropie	REV: 2.0
Company: Pep	Sheet: 3/3
Date: 2020-05-14 Drawn By: pep31	