Johnathan Jay

Mechatronics Engineering Student, Toronto Metropolitan University

jjay@torontomu.ca | Mississauga, ON

Education

Toronto Metropolitan University 2028
Bachelor of Engineering, Mechatronics Engineering (Co-op) *Toronto, ON*

- Winter 2025 Dean's List

Experience

Frame Mentee September 2025 – Present
Toronto Metropolitan Formula Racing *Toronto, ON*

- TMFR is a engineering-led student team that designs and manufactures an electric formula-style race car to compete in FSAE events around the world
- Improved manufacturing efficiency and quality by designing custom 3D-printed jigs to assemble and weld the tube steel frame, while ensuring symmetry, flatness, correct angles and critical dimensions
- Learning the physics behind frame design so that I can improve the design in future years
- Worked directly on the frame manufacturing, setting up jigs and preparing ~ 100 tubes to be welded

Team Captain September 2022 – March 2024
VEX Robotics Team 4659 *Mississauga, ON*

- Led a rookie team to provincial championships 2 seasons in a row
- Designed the robot using OnShape, leading to improved manufacturing time and quality
- Created detailed drawings and assemblies, reducing errors in manufacturing
- Documented, in detail, the entire engineering process for the robot

Projects

Line Following Robot | *Arduino, C++* 2025

- Designed, assembled, and programmed a line following robot
- Using Arduino, programmed the robot to follow a path and navigate obstacles
- Designed a lightweight 3D printed frame for the robot, decreasing the turning radius of the robot

Machining | *MasterCAM, OnShape, Manual Machining* 2022-2024

- Created a pen, a box, and a model of the CN tower using a lathe and mill to learn manufacturing techniques
- Created CNC toolpaths in MasterCAM for engraving operations
- Learned how to design products in OnShape with manufacturing processes in mind

Portfolio

Toronto Metropolitan Formula Racing — Present

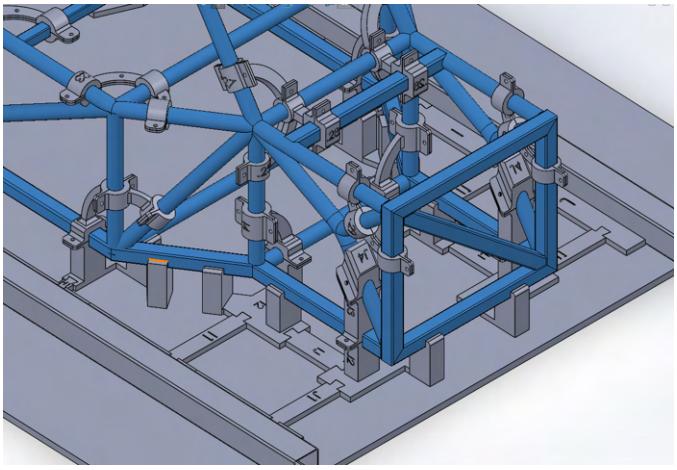

- I created 3D-printed jigs to allow us to precisely manufacture the frame of the car.
- The jigs were designed to fix the frame tubes in position so they could be TIG welded.
- We made a manufacturing plan so we could first weld the base of the frame, and then use those tubes as reference for the rest of the tubes.
- It is important that these jigs were used, since the frame has many critical dimensions to meet FSAE rules. It was also important the frame was flat, square, and symmetrical.
- When manufacturing, I assisted my mentors in setting up the jigs to spec, and ensuring that we completed welds in the right order.

Line Following Robot — 2025

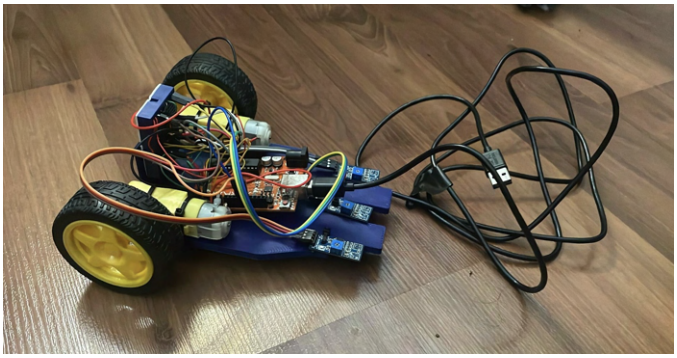

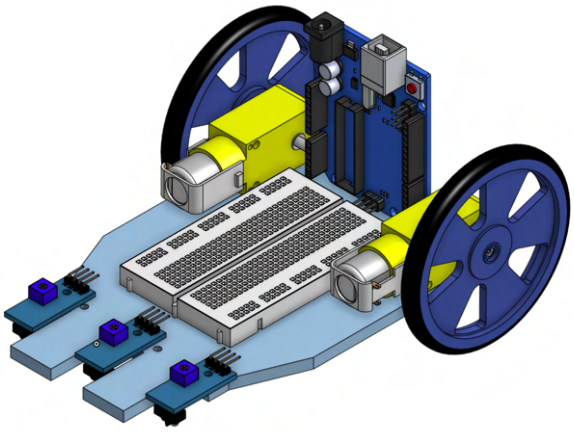

- I designed and assembled a line following robot for my Intro to Mechatronics Engineering (MTE301) course
- The robot uses an array of IR sensors to center itself on the line. The robot makes adjustments so the middle IR sensor is always on the line. The outside sensors are used to make navigation decisions (ex. sharp turns).
- I designed a lightweight frame out of PLA to package the robot so it had a small turning radius. It was important to reduce the weight to avoid overloading the motors.
- The robot uses an Arduino, and is programmed in C++.

Vex Robotics 2022-2024

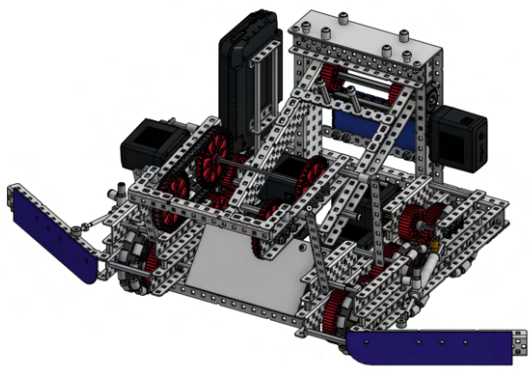

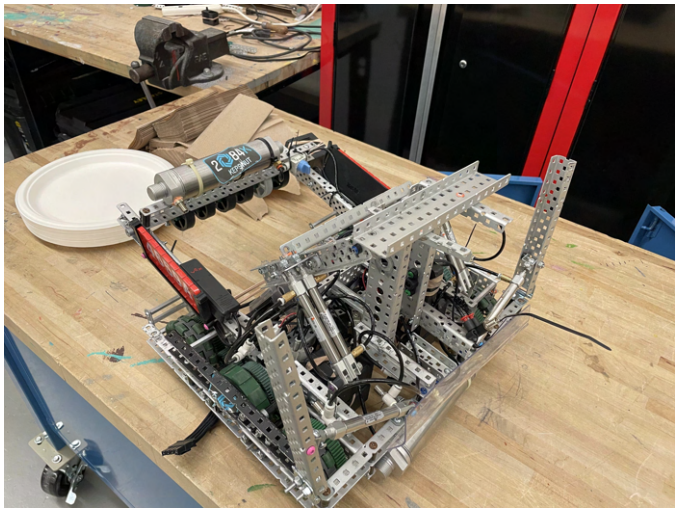

- I created a complete robot assembly in OnShape at the beginning of the season (left photo).
- As a team, we manufactured the robot to match the CAD design.
- We competed in 3 competitions, as well as competing in the provincial championships.
- I documented the design decisions in an engineering notebook, which was submitted to judges.
- As a team, we manufactured the robot, and improved the robot during the season, leading to our final robot (right photo).

Machining Projects 2022-2024

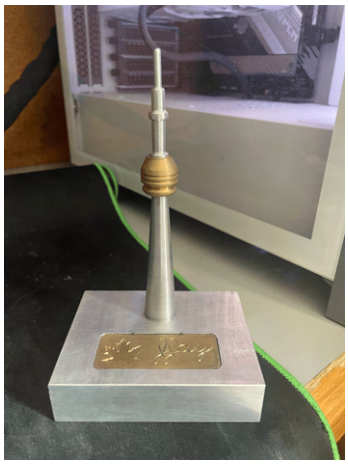

- To learn how to use a mill, lathe, and CNC mill, I created a pen and box based on a design by my instructor.
- To apply the skills I learned, I designed a model of the CN tower. I used a lathe for the pieces that make up the tower, a mill for the base, and a CNC mill to engrave my signature on the nameplate.
- I designed it in a way that was simple to machine, and used scrap that was already in the shop.
- I used OnShape for CAD, and MasterCAM for CAM.