1900A

Multifunction Counter

S/N 0970008

W/ OPT. 01 - NICAD BATTERY OPS.

Instruction Manual

P/N 384875
January 1976
Rev. 1 2/77

FLUKE®

©1981, John Fluke Mfg. Co., Inc., all rights reserved Litho in U.S.A.

WARRANTY

Notwithstanding any provision of any agreement the following warranty is exclusive:

The JOHN FLUKE MFG. CO., INC., warrants each instrument it manufactures to be free from defects in material and workmanship under normal use and service for the period of 1-year from date of purchase. This warranty extends only to the original purchaser. This warranty shall not apply to fuses, disposable batteries (rechargeable type batteries are warranted for 90-days), or any product or parts which have been subject to misuse, neglect, accident, or abnormal conditions of operations.

In the event of failure of a product covered by this warranty, John Fluke Mfg. Co., Inc., will repair and calibrate an instrument returned to an authorized Service Facility within 1 year of the original purchase; provided the warrantor's examination discloses to its satisfaction that the product was defective. The warrantor may, at its option, replace the product in lieu of repair. With regard to any instrument returned within 1 year of the original purchase, said repairs or replacement will be made without charge. If the failure has been caused by misuse, neglect, accident, or abnormal conditions of operations, repairs will be billed at a nominal cost. In such case, an estimate will be submitted before work is started, if requested.

THE FOREGOING WARRANTY IS IN LIEU OF ALL OTHER WARRANTIES, EXPRESS OR IMPLIED, INCLUDING BUT NOT LIMITED TO ANY IMPLIED WARRANTY OF MERCHANTABILITY, FITNESS, OR ADEQUACY FOR ANY PARTICULAR PURPOSE OR USE. JOHN FLUKE MFG. CO., INC., SHALL NOT BE LIABLE FOR ANY SPECIAL, INCIDENTAL, OR CONSEQUENTIAL DAMAGES, WHETHER IN CONTRACT, TORT, OR OTHERWISE.

If any failure occurs, the following steps should be taken:

1. Notify the JOHN FLUKE MFG. CO., INC., or nearest Service facility, giving full details of the difficulty, and include the model number, type number, and serial number. On receipt of this information, service data, or shipping instructions will be forwarded to you.

2. On receipt of the shipping instructions, forward the instrument, transportation prepaid. Repairs will be made at the Service Facility and the instrument returned, transportation prepaid.

SHIPPING TO MANUFACTURER FOR REPAIR OR ADJUSTMENT

All shipments of JOHN FLUKE MFG. CO., INC., instruments should be made via United Parcel Service or "Best Way"* prepaid. The instrument should be shipped in the original packing carton; or if it is not available, use any suitable container that is rigid and of adequate size. If a substitute container is used, the instrument should be wrapped in paper and surrounded with at least four inches of excelsior or similar shock-absorbing material.

CLAIM FOR DAMAGE IN SHIPMENT TO ORIGINAL PURCHASER

The instrument should be thoroughly inspected immediately upon original delivery to purchaser. All material in the container should be checked against the enclosed packing list. The manufacturer will not be responsible for shortages against the packing sheet unless notified immediately. If the instrument is damaged in any way, a claim should be filed with the carrier immediately. (To obtain a quotation to repair shipment damage, contact the nearest Fluke Technical Center.) Final claim and negotiations with the carrier must be completed by the customer.

The JOHN FLUKE MFG. CO., INC, will be happy to answer all applications or use questions, which will enhance your use of this instrument. Please address your requests or correspondence to: JOHN FLUKE MFG. CO., INC., P.O. BOX C9090, EVERETT, WASHINGTON 98206, ATTN: Sales Dept. For European Customers: Fluke (Holland) B.V., P.O. Box 5053, 5004 EB, Tilburg, The Netherlands.

*For European customers, Air Freight prepaid.

John Fluke Mfg. Co., Inc., P.O. Box C9090, Everett, Washington 98206

Rev. 6/81

Table of Contents

SECTION	TITLE	PAGE
1	**INTRODUCTION AND SPECIFICATIONS**	**1-1**
	1-1. INTRODUCTION	1-1
	1-5. SPECIFICATIONS	1-1
2	**OPERATING INSTRUCTIONS**	**2-1**
	2-1. INTRODUCTION	2-1
	2-3. SHIPPING INFORMATION	2-1
	2-6. INPUT POWER	2-1
	2-8. RACK INSTALLATION	2-1
	2-10. OPERATING FEATURES	2-1
	2-12. OPERATING NOTES	2-3
	2-13. Input Connection	2-3
	2-15. Overload Protection	2-3
	2-17. FREQUENCY MEASUREMENTS	2-3
	2-19. PERIOD MEASUREMENTS	2-3
	2-21. TOTALIZE MEASUREMENTS	2-4
	2-23. SELF CHECK MODE	2-4
3	**THEORY OF OPERATION**	**3-1**
	3-1. INTRODUCTION	3-1
	3-3. OVERALL FUNCTIONAL DESCRIPTION	3-1
	3-4. Introduction	3-1
	3-7. Frequency Mode	3-1
	3-12. Period Mode	3-2
	3-14. Totalize Mode	3-4
	3-16. Self Check Mode	3-5
	3-18. CIRCUIT DESCRIPTION	3-5
	3-19. Introduction	3-5
	3-21. Sequencer	3-5
	3-24. Input Section	3-7
	3-26. Main Gate/Decade Counters	3-7
	3-28. Display Memory and Multiplexer	3-9
	3-30. Display	3-9
	3-32. Time Base	3-10

(continued on page ii)

TABLE OF CONTENTS, *continued*

SECTION	TITLE	PAGE
	3-34. Range Control Logic	3-11
	3-38. Decimal Point Logic	3-12
	3-40. Autorange Logic	3-12
4	**MAINTENANCE**	**4-1**
	4-1. INTRODUCTION	4-1
	4-3. SERVICE INFORMATION	4-1
	4-5. GENERAL MAINTENANCE	4-1
	4-6. Access	4-1
	4-8. Cleaning	4-1
	4-10. Fuse Replacement	4-1
	4-12. PERFORMANCE CHECKS	4-1
	4-14. Functional Check	4-1
	4-16. Sensitivity Check	4-1
	4-18 CALIBRATION	4-2
	4-20. Trigger Level Adjustment	4-2
	4-22. Time Base Oscillator Adjustment	4-2
	4-24. Time Base Adjustment Using a Frequency Standard	4-3
	4-25. TROUBLESHOOTING	4-3
	4-26. Introduction	4-3
	4-28. Initial Troubleshooting	4-3
	4-30. Power Supply	4-3
	4-32. Fault Isolation	4-3
	4-34. Input Section	4-3
	4-36. Time Base	4-3
	4-38. Sequencer	4-3
	4-40. Control Logic and Counters	4-3
	4-42. REPAIR TECHNIQUES	4-4
	4-43. Battery-Powered Instruments	4-4
	4-45. Integrated Circuit Replacement	4-4
5	**LIST OF REPLACEABLE PARTS**	**5-1**
	5-1. INTRODUCTION	5-2
	5-4. HOW TO OBTAIN PARTS	5-2
	5-7. USE CODE EFFECTIVITY LIST	5-2
6	**OPTION AND ACCESSORY INFORMATION**	**6-1**
7	**GENERAL INFORMATION**	**7-1**
8	**SCHEMATIC DIAGRAMS**	**8-1**

List of Illustrations

FIGURE	TITLE	PAGE
2-1	Controls, Connectors, and Indicators	2-2
2-2	Input Overload Protection Levels	2-3
3-1	Model 1900A, Simplified Block Diagram-Frequency Mode	3-2
3-2	1900A Sequence Flow Chart	3-3
3-3	Model 1900A, Simplified Block Diagram-Period Mode	3-4
3-4	Model 1900A, Simplified Block Diagram-Totalize Mode	3-4
3-5	Model 1900A, Simplified Block Diagram-Self-Check Mode	3-5
3-6	Sequencer	3-6
3-7	Input Section, Block Diagram	3-7
3-8	Decade Counters, Display Memory, and Display Multiplexer Block Diagram	3-8
3-9	Display	3-9
3-10	Time Base Oscillator, Block Diagram	3-10
3-11	Range Control Logic	3-11
3-12	Decimal Point Logic	3-13
3-13	Autorange Logic	3-14
4-1	Test Point Locations	4-5
4-2	Fault Isolation-No Display	4-6
4-3	Fault Isolation-One Dark Digit	4-7
4-4	Fault Isolation-Dark LED Segment	4-8
4-5	Fault Isolation-No Counting Action	4-9
4-6	Fault Isolation-Decimal Point Missing	4-10

(continued on page iv)

LIST OF ILLUSTRATIONS, *continued*

FIGURE	TITLE	PAGE
5-1	Final Assembly	5-4
5-2	Main PCB Assembly-Line Configuration	5-6
5-3	Main PCB Assembly-Battery (–01 Option) Configuration	5-10
5-4	Input PCB Assembly	5-14
5-5	Display PCB Assembly	5-17
5-6	Inverter PCB Assembly	5-19
5-7	D.O.U. PCB Assembly	5-21/5-22
8-1	Main PCB Assembly (1 of 3)	8-3
8-1	Main PCB Assembly (2 of 3)	8-4
8-1	Main PCB Assembly (3 of 3)	8-5
8-2	Input PCB Assembly	8-6
8-3	Display PCB Assembly	8-7
8-4	D.O.U. PCB Assembly	8-8

List of Tables

TABLE	TITLE	PAGE
1-1	Model 1900A Specifications	1-2
3-1	Mnemonic Definition	3-1
3-2	Time Base Divider Ratios (U7)	3-12
4-1	Test Equipment Required for Performance Test, Calibration and Troubleshooting	4-2
4-2	Test Point Descriptions	4-4
4-3	Model 1900A Integrated Circuit Types	4-4
7-1	List of Abbreviations and Symbols	7-2
7-2	Federal Supply Codes for Manufacturers	7-3
7-3	Fluke Technical Service Centers	7-7
7-4	International Service Centers	7-7
7-5	Sales Representatives, Domestic	7-8
7-6	Sales Representatives, International	7-9

Section 1

Introduction & Specifications

1-1. INTRODUCTION

1-2. The Fluke Model 1900A is a 5 Hz to 80 MHz multiple-function counter capable of making frequency, period, period averaging and totalize measurements. In the frequency mode, resolution is manually selectable at 0.1 Hz, 1.0 Hz, 10 Hz and 100 Hz. In the period averaging mode, the number of periods averaged is manually-selectable at 10^0, 10^1, 10^2 and 10^3 periods. Automatic selection of resolution and number of periods averaged (autoranging) is also provided to automatically select the optimum range for a particular input signal. However, the 100 Hz resolution and 10^3 periods must be manually selected.

1-3. The measurement display is six digits, light-emitting-diode-type (LED) with leading-zero suppression and automatic decimal point positioning. Annunciators are provided to indicate measurement units (kHz, MHz, milliseconds and microseconds) and also overflow when the capacity of the display is exceeded. All displayed information is also available, in parallel BCD format, at a rear-panel connector when the unit is equipped with an optional Data Output Unit (DOU).

1-4. The Model 1900A is equipped with a selectable 1 MHz low-pass filter for use in electrically noisy environments, and a selectable 10:1 attenuator for use with high-level inputs. A self-check mode of operation is provided to verify overall performance of the unit. Power requirements are 100, 115 or 230 volts at 50 to 400 Hz for the line-powered version. An optional battery-powered version, Model 1900A--01, provides for use away from ac power lines and is equipped with rechargeable nickel-cadmium batteries. The battery-powered version also operates from the ac lines, but only at the power line frequency and voltage specified on the bottom of the instrument.

1-5. SPECIFICATIONS

1-6. The pertinent specifications for the Model 1900A are listed in the following Table 1-1.

Table 1-1. MODEL 1900A SPECIFICATIONS

OPERATING RANGES

Frequency:
5 Hz to 80 MHz

Period:
5 Hz to 1 MHz single and multiple period averages

Totalize:
1 count to 999999 counts

INPUT CHARACTERISTICS

Sensitivity:
25 mV, typically 15 mV rms sine wave, 5 Hz to 80 MHz
Frequency and totalize: 200 mV P-P pulse amplitude with minimum pulse width of 20 nsec. Duty cycle > 10%.
Period: 200 mV P-P pulse amplitude with minimum pulse width of 200 nsec. Duty cycle > 10%.

Impedance:
1 MΩ shunted by less than 30 pf for signal levels < 500 mV decreasing to approx. 220K shunted by less than 40 pf for levels greater than 500 mV.

Filter:
1 MHz (3dB point) lowpass

Attenuator:
Decreases sensitivity by 10

Overload:
250V rms 5 Hz to 1 kHz decreasing to 20V at 80 MHz

RESOLUTION

Frequency:
Four manually selected gate times of:
10ms (100 Hz resolution)
100ms (10 Hz resolution)
1s (1 Hz resolution)
10s (0.1 Hz resolution)

Autorange position will automatically seek to fill all 6 digits but will not select a gate time greater than 1 second (1 Hz resolution)

Period:
Manual selection of single period through 10^3 periods averaged ratios:
10^0 single period (100 ns resolution)
10^1 periods averaged (10 ns resolution)
10^2 periods averaged (1 ns resolution)
10^3 periods averaged (100 ps resolution)

Autorange position will automatically seek to fill all 6 digits. Autoranging will not select a period average of greater than 10^2 averages.

Totalizing:
Accumulates up to 999999 counts, then activates overflow indicator.

TIME BASE CHARACTERISTICS

Frequency: 10 MHz

Stability:
Aging Rate: $< \pm 5 \times 10^{-7}$ month
Short Term: $< \pm 5 \times 10^{-8}$ over 1 second
Temperature: $< \pm 5 \times 10^{-6}$ 0°C to 50°C
$< \pm 2 \times 10^{-6}$ (typical) 20°C to 30°C

Line Variation:
$< \pm 1 \times 10^{-7}$ for ±10% variation in line voltage

GENERAL

Display:
6 digit LED, leading zero suppression
Time between successive measurements is 200 ms plus measurement time

Annunciation:
MHz, kHz, msec, μs overflow

Automatic Features:
AUTORANGE:
In both frequency and period modes, autoranging includes a unique 20% hysteresis in its switching thresholds, to eliminate redundant up range/down range commands. This allows measurements to be made on signals containing large amounts of FM and PM.
Hysteresis memory can be reset by depressing the reset button.
AUTORESET:
A new measurement sequence is started every time a front panel button is activated.

Operating Temp: 0°C to +50°C (0°C to +40°C for -01 Battery option if operated from line.

Storage Temp: –40°C to +60°C

Power Requirements:
115/230 VAC ±10% - 100 VAC available - 50, 60, 400 Hz - 6.5 watts line model - 8.5 watts battery model

Fuses:
1/4A AC-line version-½ A slo-blo battery version

DIMENSIONS

Width:	8.55 inches	217.2 mm
Height:	2.52 inches	64.0 mm
Depth:	10.65 inches	270.5 mm
Weight:	2.75 lbs	1.2 Kg

DATA OUTPUT OPTION

8-4-2-1 BCD output from each digit, plus encoded decimal point and units annunciation information. All outputs CMOS/Low Power TTL compatible, high true. Print command is provided.

BATTERY

NICAD rechargeable - discharge time 5 hours - charge time 14 hours @ ≤ 30°C ambient with unit inoperative.

static awareness

A Message From

John Fluke Mfg. Co., Inc.

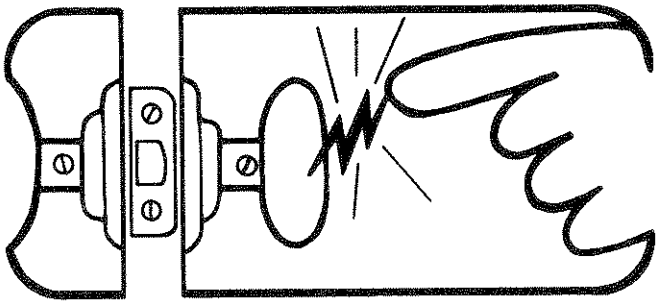

Some semiconductors and custom IC's can be damaged by electrostatic discharge during handling. This notice explains how you can minimize the chances of destroying such devices by:

1. Knowing that there is a problem.
2. Learning the guidelines for handling them.
3. Using the procedures, and packaging and bench techniques that are recommended.

The Static Sensitive (S.S.) devices are identified in the Fluke technical manual parts list with the symbol "⊗"

The following practices should be followed to minimize damage to S.S. devices.

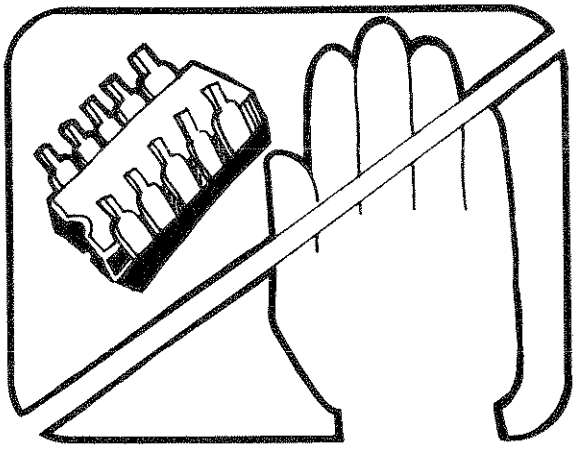

1. MINIMIZE HANDLING

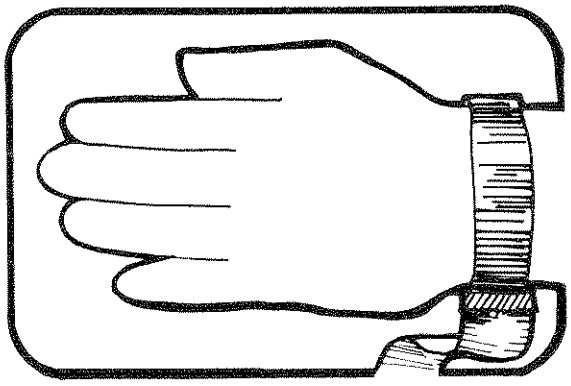

3. DISCHARGE PERSONAL STATIC BEFORE HANDLING DEVICES

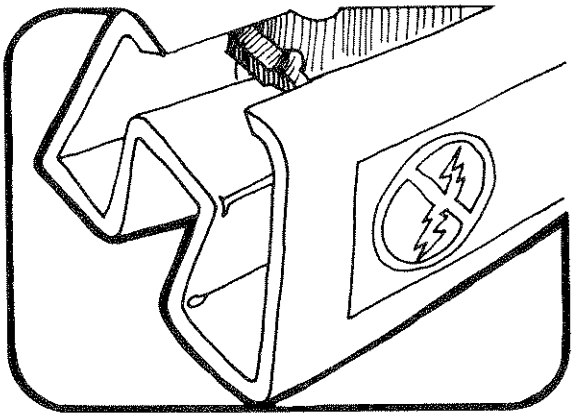

2. KEEP PARTS IN ORIGINAL CONTAINERS UNTIL READY FOR USE.

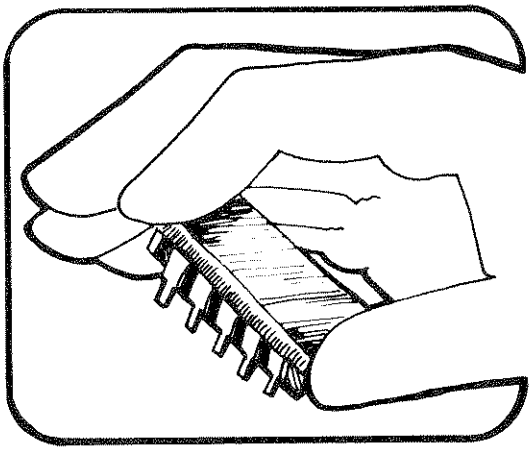

4. HANDLE S.S. DEVICES BY THE BODY

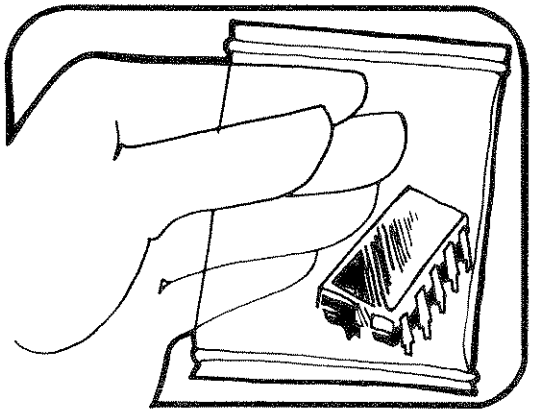

5. USE ANTI-STATIC CONTAINERS FOR HANDLING AND TRANSPORT

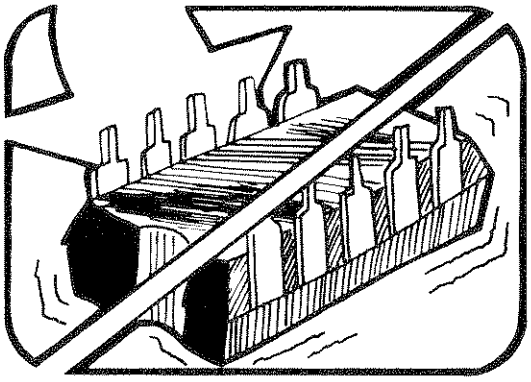

6. DO NOT SLIDE S.S. DEVICES OVER ANY SURFACE

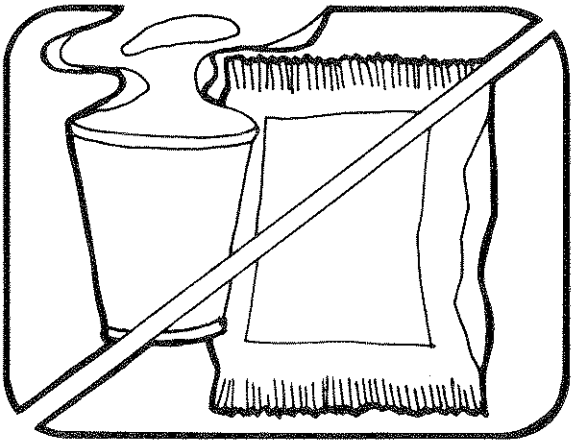

7. AVOID PLASTIC, VINYL AND STYROFOAM® IN WORK AREA

PORTIONS REPRINTED
WITH PERMISSION FROM TEKTRONIX, INC.
AND GENERAL DYNAMICS, POMONA DIV.

® Dow Chemical

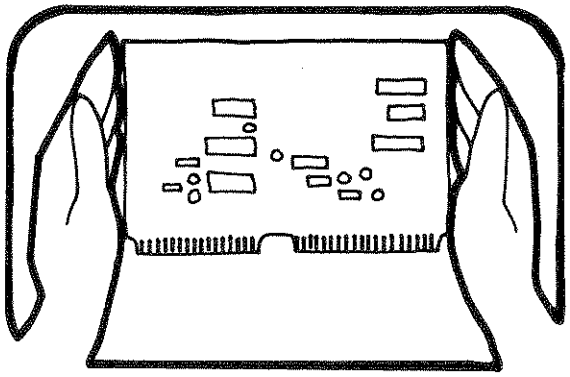

8. WHEN REMOVING PLUG-IN ASSEMBLIES, HANDLE ONLY BY NON-CONDUCTIVE EDGES AND NEVER TOUCH OPEN EDGE CONNECTOR EXCEPT AT STATIC-FREE WORK STATION. PLACING SHORTING STRIPS ON EDGE CONNECTOR USUALLY PROVIDES COMPLETE PROTECTION TO INSTALLED SS DEVICES.

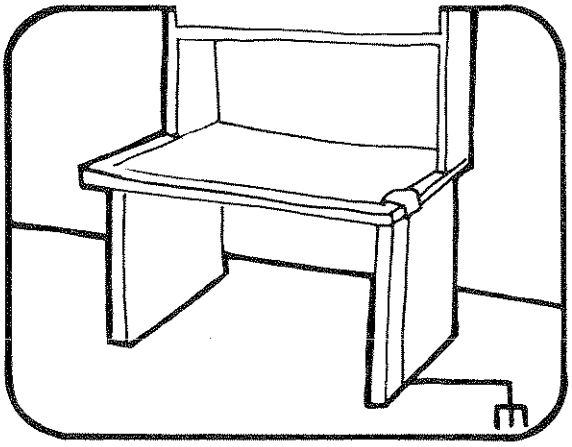

9. HANDLE S.S. DEVICES ONLY AT A STATIC-FREE WORK STATION
10. ONLY ANTI-STATIC TYPE SOLDER-SUCKERS SHOULD BE USED.
11. ONLY GROUNDED TIP SOLDERING IRONS SHOULD BE USED.

Anti-static bags, for storing S.S. devices or pcbs with these devices on them, can be ordered from the John Fluke Mfg. Co., Inc.. See section 5 in any Fluke technical manual for ordering instructions. Use the following part numbers when ordering these special bags.

John Fluke Part No.	Description
453522	6" X 8" Bag
453530	8" X 12" Bag
453548	16" X 24" Bag
454025	12" X 15" Bag
Pink Poly Sheet 30"x60"x60 Mil P/N RC-AS-1200 $20.00	Wrist Strap P/N TL6-60 $7.00

J0089B-07U7810/SE EN Litho in U.S.A.

Section 2
Operating Instructions

2-1. INTRODUCTION

2-2. This section contains operating information for the Model 1900A. The contents of this section should be read before operating the counter. Should any difficulties arise during operation of this instrument, please contact your nearest John Fluke Sales Representative, or the John Fluke Mfg. Co., Inc., P.O. Box 43210, Mountlake Terrace, WA 98043; telephone (206) 774-2211. A list of Sales Representatives is located at the rear of this manual.

2-3. SHIPPING INFORMATION

2-4. The Model 1900A is packaged and shipped in a protective container. Upon receipt of the equipment, a thorough inspection should be made to reveal any possible shipping damage. Special instructions for inspection and claims are included in the shipping carton.

2-5. If reshipment of the equipment is necessary, the original container should be used. If the original container is not available, a new container can be obtained from the John Fluke Mfg. Co. Please reference the equipment model number when requesting a new shipping container.

2-6. INPUT POWER

2-7. The Models 1900A and 1900A–01 are supplied with one of three ac input power configurations. These consist of 100Vac, 115Vac and 230Vac; at 50 to 400 Hz. Before connecting to the ac line power, insure that the instrument is in the proper configuration for your power lines. A decal on the underside of the instrument indicates the ac line voltage and frequency required.

CAUTION

The battery-powered version must be operated at the line frequency stamped on the bottom–panel decal.

2-8. RACK INSTALLATION

2-9. The Model 1900A may be mounted in a standard 19-inch rack when supplied with the appropriate rack mounting kit. Rack mounting kits are available to allow left, right or center mounting. Instructions for installing units in the rack mount are supplied with the rack mounting kit. The center rack mounting kit is Model No. M00-200-612. The offset rack mounting kit is Model No. M00-200-611.

2-10. OPERATING FEATURES

2-11. The location and function of all controls, connectors, and indicators are shown in Figure 2-1. Operating features and instructions for accessories are discussed in Section 6.

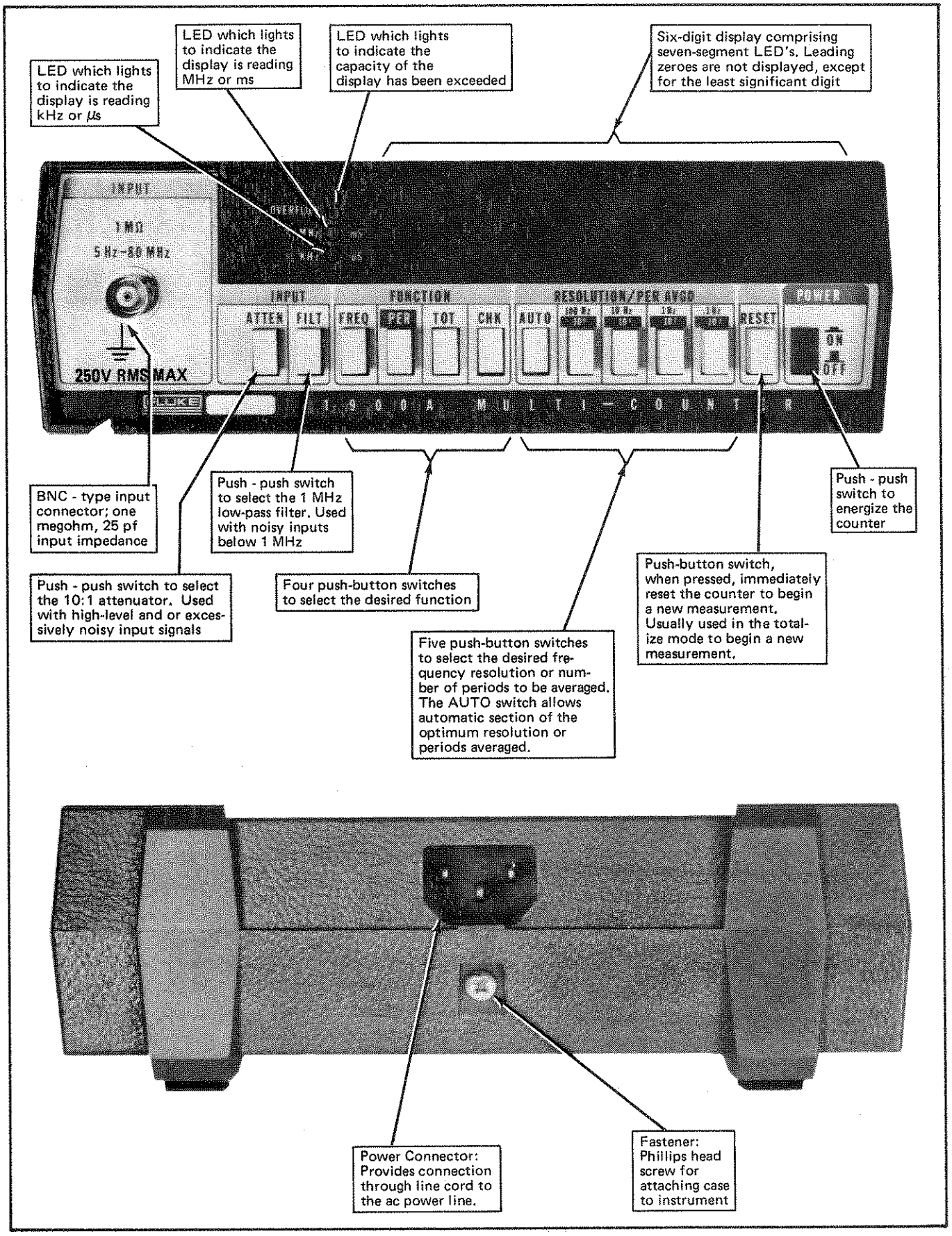

Figure 2-1. CONTROLS, CONNECTORS AND INDICATORS

2-12. OPERATING NOTES

2-13. Input Connection

2-14. Signals to be measured by the Model 1900A are applied to the front-panel BNC connector. Connection of all input signals should be by means of coaxial-type cable fitted with a mating BNC connector. Input impedance is one megohm shunted by < 30 pf. Input sensitivity is 25 millivolts rms. The input impedance derates to approximately 220K shunted by less than 40 pf for input levels greater than 500 mV.

WARNING

The outside contact of the BNC connector is tied directly to earth ground through the power plug. DO NOT connect the active lead of input signals to the outside contact. Irrepairable damage to the 1900A may result. To measure power line frequencies, use an isolation transformer.

2-15. Overload Protection

2-16. The Model 1900A will accept inputs as high as 250 volts rms at frequencies below 1 kHz without damage. Overload capability decreases linearly from 250 volts rms at 1 kHz to 20 volts rms at 80 MHz input, as illustrated in Figure 2-2.

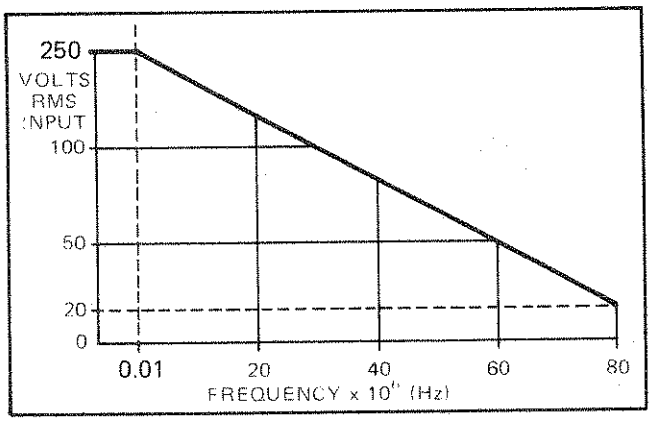

Figure 2-2. INPUT OVERLOAD PROTECTION LEVELS

2-17. FREQUENCY MEASUREMENTS

2-18. Perform frequency measurements as follows:

a. Press the POWER switch to the ON position.

b. Press the FREQ switch to select the frequency mode of operation.

c. Select the desired resolution, or the autorange mode by pressing the AUTO switch. If the input signal is completely unknown, the autorange mode will select the optimum range.

NOTE

In the autorange mode, automatic selection is made between the lower three resolutions. The 0.1 Hz resolution can only be manually selected (by means of the .1 Hz RESOLUTION switch).

d. Connect the input signal to the front-panel BNC connector. In the case of input waveform jitter or noise, spiked waveforms, or ripple on TTL waveforms, the reading obtained may be incorrect or unsteady due to false triggering of the schmitt trigger in the input section. If the signal level is greater than 150mV, depressing the ATTEN switch will decrease the triggering sensitivity of the input section by a factor of ten and reduce errors.

e. If the input signal is below 1 MHz, high-frequency noise can be eliminated by pressing the FILT switch.

f. Read the frequency on the display, and observe the unit of measurement indication (kHz or MHz) to the left of the display.

2-19. PERIOD MEASUREMENTS

2-20. Perform period measurements as follows:

a. Press the POWER switch to the ON position.

b. Press the PER switch to select the period mode of operation

c. Select the desired number of periods to be averaged, or the autorange mode by pressing the AUTO switch. If the input signal is completely unknown, the autorange mode will select the optimum number of periods to average.

NOTE

In the autorange mode, automatic selection is made between 10^0, 10^1 and 10^2 periods to be averaged. The 10^3 (1000) periods averaged can only be manually selected (by means of the 10^3 PER AVGD switch).

d. Connect the input signal to the front-panel BNC connector. In the case of input waveform jitter or noise, spiked waveforms, or ripple on TTL waveforms, the reading obtained may be incorrect or unsteady due to false triggering of the schmitt trigger in the input section. If the signal level is greater than 150mV, depressing the ATTEN switch will decrease the triggering sensitivity of the input section by a factor of ten and reduce errors.

e. If the input signal is below 1 MHz, high-frequency noise can be eliminated by pressing the FILT switch.

f. Read the period time on the display, and observe the unit of measurement indication (ms or μs) to the left of the display.

2-21. TOTALIZE MEASUREMENTS

2-22. Perform totalize measurements as follows:

a. Press the POWER switch to the ON position.

b. Press the TOT switch to select the totalize mode of operation, and the RESET switch to initialize the counter.

c. Connect the input signal to the front-panel BNC connector. In the case of input waveform jitter or noise, spiked waveforms, or ripple on TTL waveforms, the reading obtained may be incorrect or unsteady due to false triggering of the schmitt trigger in the input section. If the signal level is greater than 150mV, depressing the ATTEN switch will decrease the triggering sensitivity of the input section by a factor of ten and reduce errors.

d. If the input signal is below 1 MHz, high-frequency noise can be eliminated by pressing the FILT switch.

e. Read the accumulated total on the display.

2-23. SELF-CHECK MODE

2-24. The self-check mode provides a means of verifying proper overall operation of counter, excluding input section, time base accuracy, and time base dividers used in the period mode.

a. Press the POWER switch to the ON position.

b. Press the CHK switch to select the self-check mode.

c. Press the 100 Hz RESOLUTION switch; the display should read 1.0000 MHz, with the leading zero blanked (X1.0000).

d. Press the 10 Hz RESOLUTION switch; the display should read 1000.00 kHz.

e. Press the 1 Hz RESOLUTION switch; the display should read 00.0000 kHz, and light the OVFL annunciator.

f. Press the AUTO switch; the display should read 1000.00 kHz, as in step c.

Section 3
Theory of Operation

THEORY OF OPERATION

3-1. INTRODUCTION

3-2. This section of the manual is divided into two parts. Overall Functional Description gives an overview of the circuit functions and how they are used in each mode. Circuit Description details the operation of each circuitry section. Simplified block diagrams are referred to by figure number. Complete schematic diagrams are located in section 8. Table 3-1 is a list of definitions for the mnemonics used in the schematic diagrams and text.

Table 3-1. MNEMONIC DEFINITIONS

BCD	Binary Coded Decimal
BL	Blank or Blanking
CLK	Clock
DP	Decimal Point
DS	Decimal Signal
FF	Flip-Flop
ICR	Iteration Counter Reset
KL	Annunciator Signal (MHz - mSec)
LSD	Least Significant Digit
ML	Annunciator Signal MHz - mSec)
MSD	Most Significant Digit
MSDM	MSD Memory
MUP	Memory Update
OV, OVFL	Overflow
RMAX	Reset to Maximum Count
RNG	Range
TOT	Total or Totalize

3-3. OVERALL FUNCTIONAL DESCRIPTION

3-4. Introduction

3-5. Seven basic sections compose the circuitry of the 1900A multicounter: an input section, main gate, decade counters/display memory/ display multiplexer, display, time base, range control logic, and program control logic. The input section conditions the signal with regard to amplitude and waveshape. The main gate controls the application of the signal to be counted to the decade counters. A signal is counted by the decade counters, stored in the display memory, and multiplexed to the display on a common data bus.

3-6. The time base section provides two frequencies which compose the time base against which other signals are compared. Range control divides the time base (or the input signal in the period mode) to control the main gate. Decimal information is derived from range control. Program control consists of a sequencer and autorange logic. Understanding the sequencer logic, which controls the timing of events, is very important to understanding the functioning of the instrument. An outline of the sequence of events is given in the explanation of the frequency mode.

3-7. Frequency Mode

3-8. In the frequency mode the signal from the input section is applied to the first decade counter. Refer to figure 3-1. The duration of the count is derived from the time base. The sequence of events, as ordered by the pro-

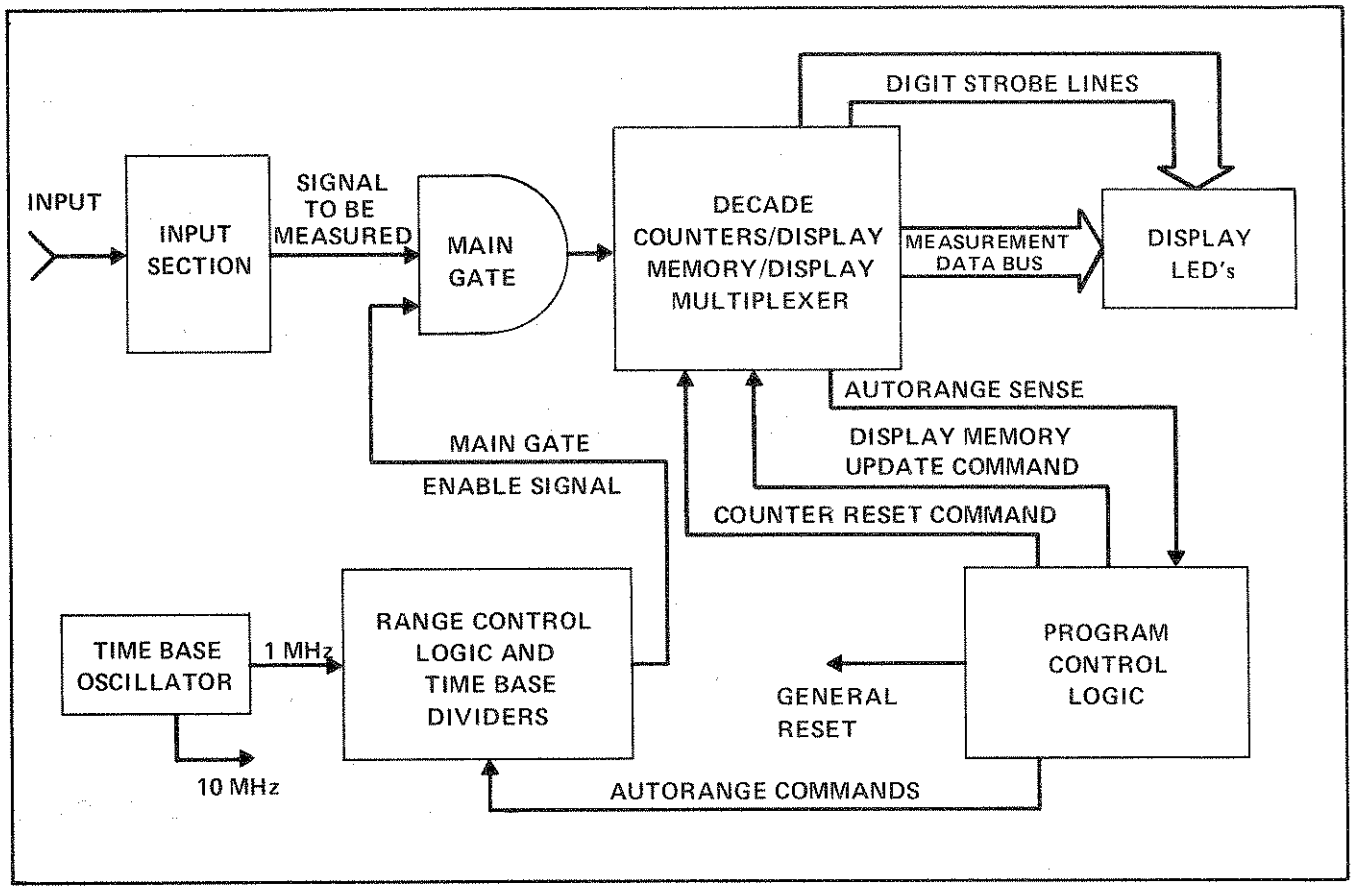

Figure 3-1. MODEL 1900A, SIMPLIFIED BLOCK DIAGRAM – FREQUENCY MODE

gram control section, begins with step 9. Refer to figure 3-2. Range logic is reset to the shortest gate time. A new measurement always begins with the shortest gate time. Any time a front panel switch is depressed, a new measurement is initiated by resetting the program control to step 9. The next event is general reset (GR), step 1. All the decade counters are set to 0 and the autorange logic is reset. Step 2 is skipped as only odd numbered steps are used to order events. At step 3 the time base dividers in the time base and the range control sections are enabled. The count is initiated by enabling the main gate to apply data to the first decade counter. The signal from the input section is applied to the clock input and toggles the counter. The output from the first counter is used to toggle the subsequent counters. At the end of the measurement period, the main gate is disabled and the count is held.

3-9. During step 5 the autorange logic decides whether or not the range is adequate for optimum resolution. If the most significant digit (MSD) is one or more, optimum resolution has been achieved. If the MSD is less than one, range control increases the gate time by a factor of ten. Manual selection of a range appears to the autorange logic as though the MSD is greater than one. Steps 7 and 9 are skipped and another count is taken in the new range. However, if in the previous measurement the MSD was equal to one, the second significant digit (2SD) must fall below 8 before a range change will be initiated This range hystersis prevents an unstable display if a measurement happens to vary a few cycles above or below MSD = 1. When a count is obtained with optimum resolution, the sequence may go on to step 7.

3-10. A memory update signal, MUP, occurs at step 7. The count obtained in step 5 is memorized for presentation to the display section. The display runs continuously. BCD digit information is strobed by the multiplexer from the memory on a data bus to the display. Six strobes are used, one for each digit. Each strobe enables one digit byte to be applied to the data bus and simultaneously enables the appropriate LED to light. MUP also enables the range logic conditions to be memorized by the decimal point logic. The decimal point logic decodes the range information and applies a pulse to the decimal bus during the correct strobe.

3-11. Range logic is reset to the shortest gate time during step 9. The measurement cycle is now complete and the instrument is ready to take a new measurement. Every new measurement starts with the shortest gate time.

3-12. Period Mode

3-13. The signal from the input section is applied to range control to derive the gate time in the period mode.

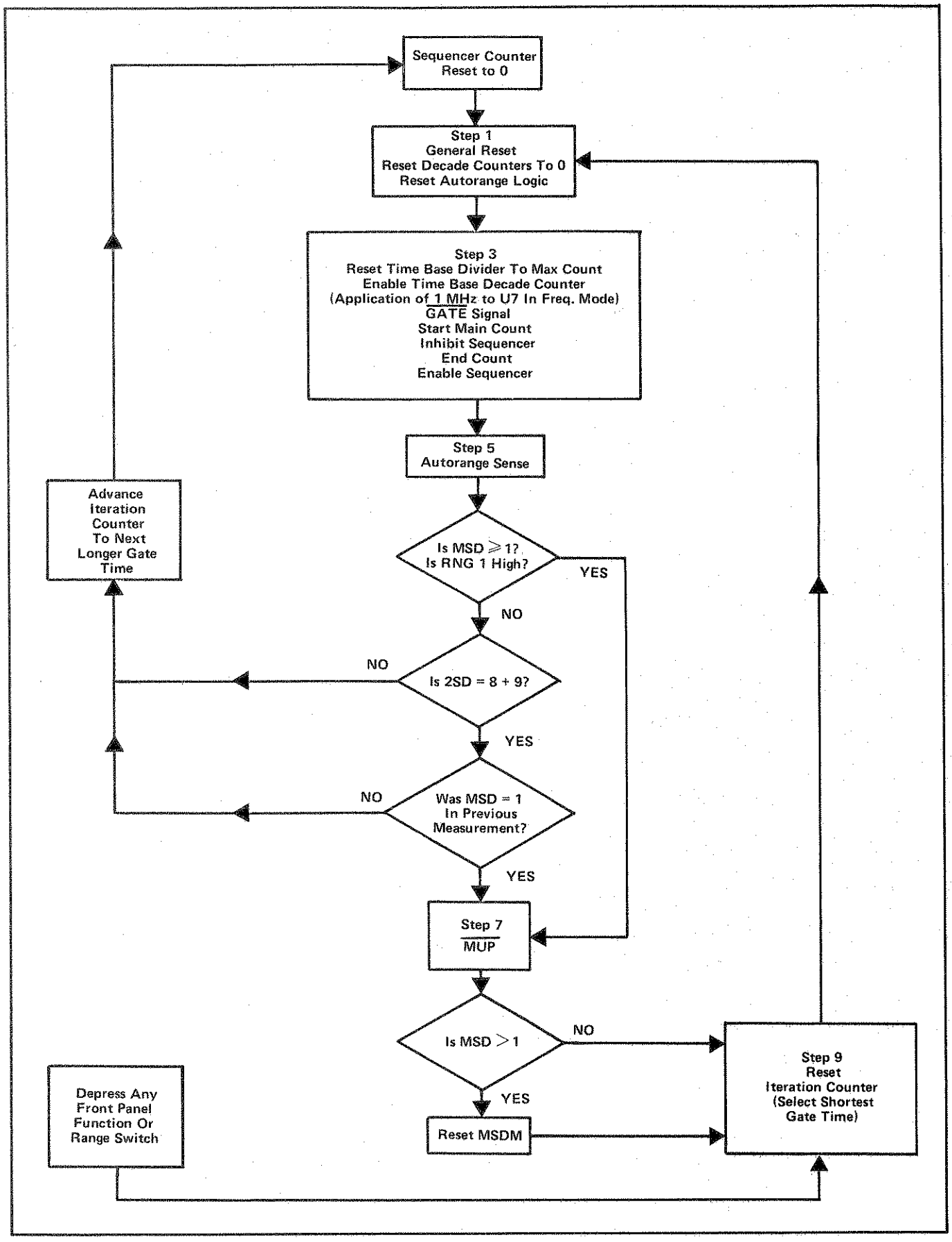

Figure 3-2. 1900A SEQUENCE FLOW CHART

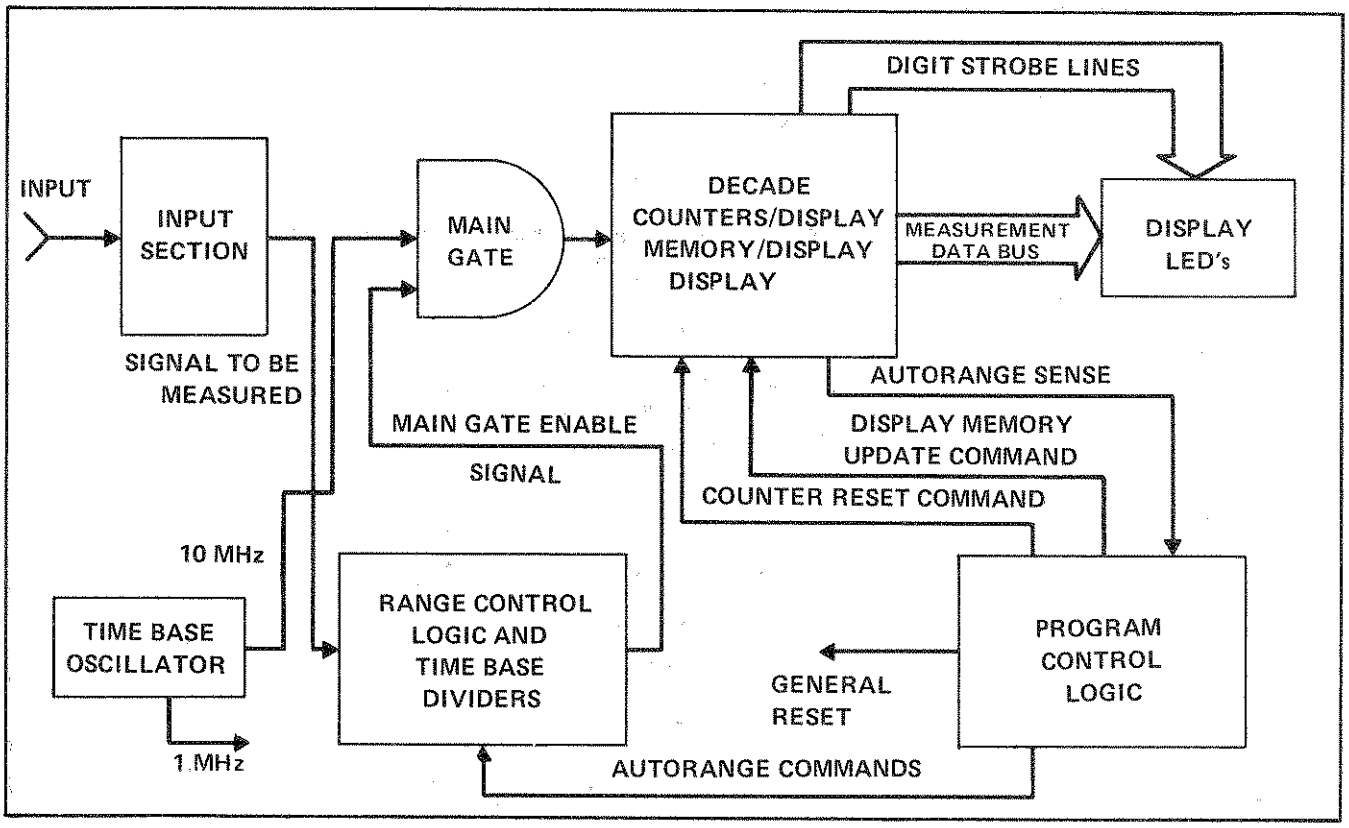

Figure 3-3. MODEL 1900A, SIMPLIFIED BLOCK DIAGRAM – PERIOD MODE

Refer to figure 3-3. Range control is programmed differently so that smaller division factors of ten are used in the period ranges. A 10MHz signal from the time base section is counted to determine how long the period is. The sequence of events is the same as in the frequency mode.

3-14. Totalize Mode

3-15. All range and program control functions are bypassed in the totalize mode. Refer to figure 3-4. The signal from the input section is applied to the first counter as in the frequency mode. However, the gate time is manually

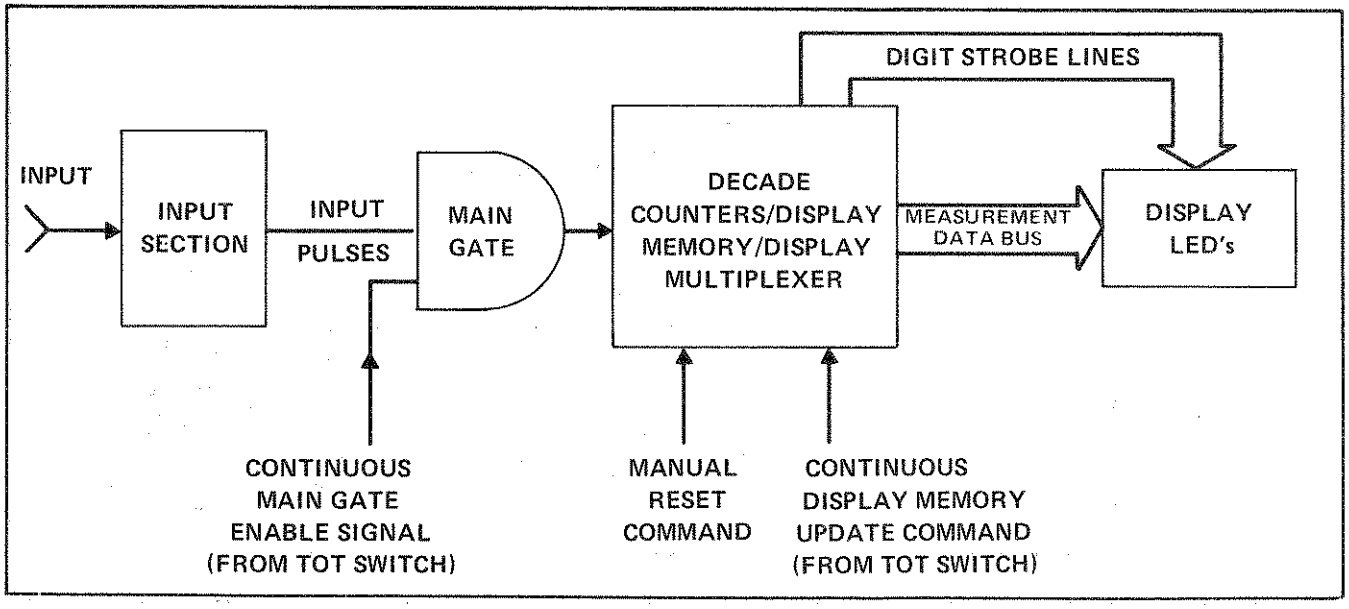

Figure 3-4. MODEL 1900A, SIMPLIFIED BLOCK DIAGRAM – TOTALIZE MODE

controlled. MUP is continuously enabled and the count is displayed as it is counted. The counter will count to 999999, when the overflow indicator lights and the count starts over. A new count may be initiated by depressing the reset switch.

3-16. Self Check Mode

3-17. In the self check mode the 1 MHz output from the time base section is used both as the derivation of the gate time and as the frequency to be counted. Refer to figure 3-5. In this mode the functioning of all parts of the instrument may be checked except the input section, the accuracy of the time base, and the time base dividers used in the period mode. The sequence of events and the operation of the circuitry is the same as in the frequency mode.

3-18. CIRCUIT DESCRIPTION

3-19. Introduction

3-20. Analysis of circuit blocks are contained in this section of the manual. Simplified schematic block diagrams are referred to by figure number. Information presented in tabular form is referred to by table number. Complete schematic diagrams are located in section 8. Circuit blocks must be analysed not only with respect to their internal operation but in relation to the sequence of events as explained under Frequency Mode. Figure 3-2 is a flow chart of the sequence of events in the 1900A.

3-21. Sequencer

3-22. The sequencer consists of a relaxation oscillator (U1), a decade counter (U2), and a decoder (U3). Refer to figure 3-6. Two sections of U1 are used to form the relaxation oscillator. R3 and C1 determine the frequency, approximately 100 Hz. U2 counts the oscillator frequency and presents the count to U3 in BCD form. Outputs from U3 are used to command events in the 1900A sequence. In all cases the output of U3 goes low to select an event. Step 1 is general reset (GR). The output of U3 is applied to a two-input NAND gate, one section of U5. The other input to the NAND gate is from the front panel switches through U1. If either input goes low, GR is initiated. The output of U5 is inverted twice to obtain the required GR and $\overline{GR}$ signals.

3-23. During step 3 the main gate is enabled. The $\overline{GATE}$ signal applied to a section of U5 inhibits the sequencer. $\overline{RMAX}$ from U3 inhibits the relaxation oscillator through CR1 and sets its output high so that at the end of $\overline{GATE}$, the counter will be toggled to the next step. Step 5 is autorange sense, step 7 is the memory update, MUP, and step 9 is the iteration counter reset, $\overline{ICR}$.

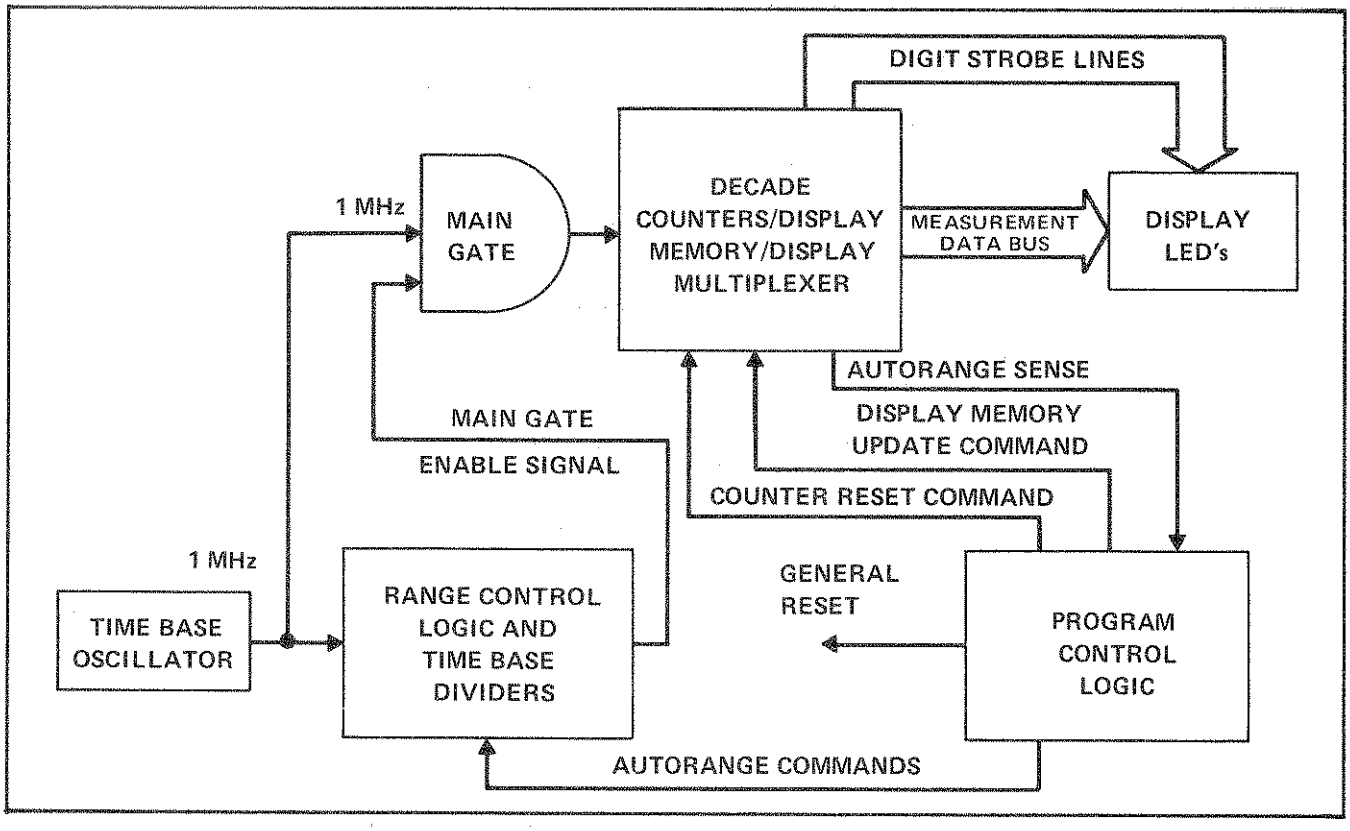

Figure 3-5. MODEL 1900A, SIMPLIFIED BLOCK DIAGRAM — SELF-CHECK MODE

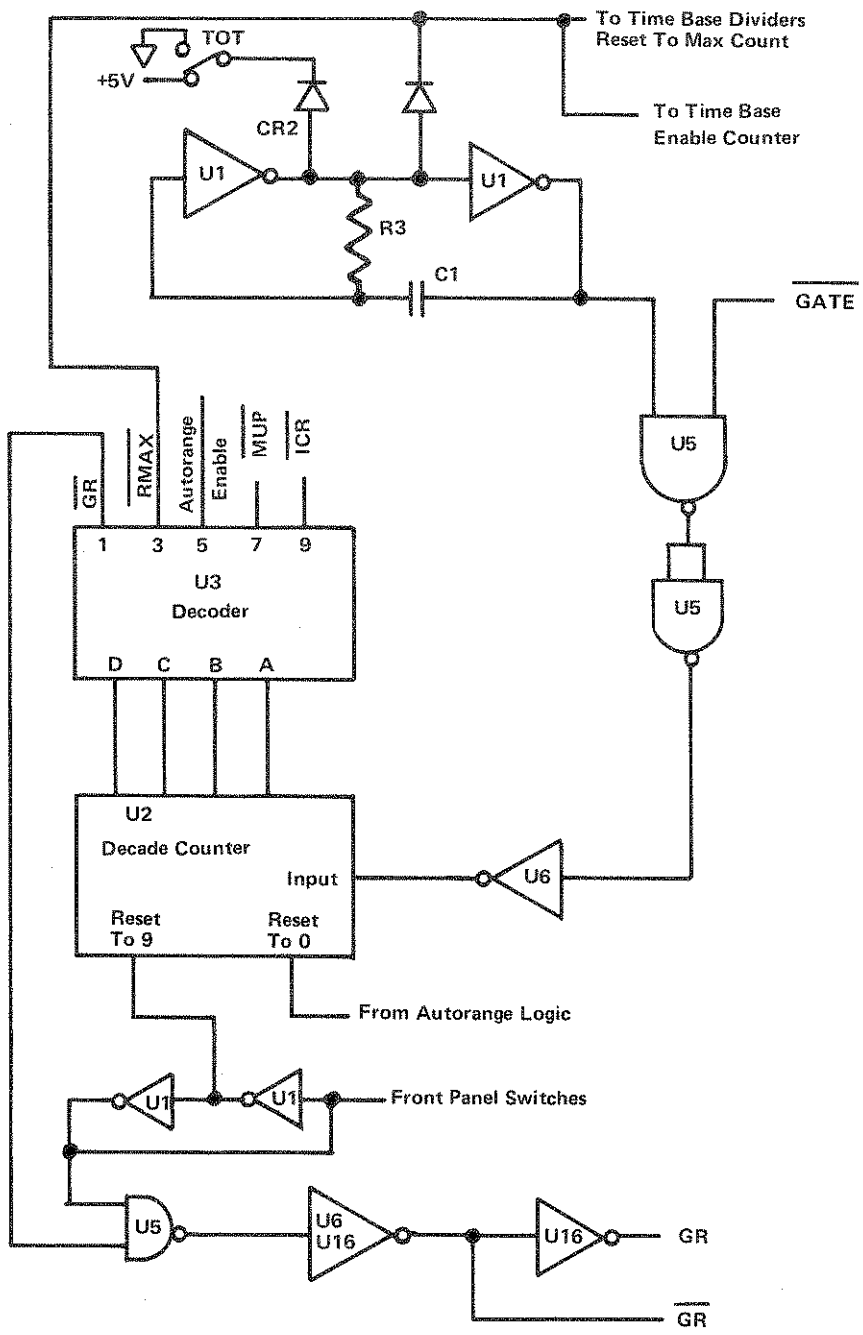

Figure 3-6. SEQUENCER

3-24. Input Section

3-25. An input signal from the BNC connector is coupled through C1 to buffer amplifier, Q1 and Q2. Refer to figure 3-7. The output of the buffer is applied to the emitters of Q3 and Q4. Attenuator switch, S1A, controls the biasing of Q3 and Q4. Q3 passes the signal unattenuated and Q4 passes the signal attenuated by R6 and R7. With the filter switch out, CR7 and CR8 are biased off and no filtering occurs. When CR7 and CR8 are biased on, C6 provides a low impedance path to ground for frequencies above 1 MHz. The first section of U1 is a comparator amplifier whose triggering sensitivity is controlled by R14. The second section of U1 is an amplifier which drives the third section, a schmitt trigger. The output amplifier consists of Q5, Q6, and Q7 which further squares the signal and converts it to TTL levels.

3-26. Main Gate/Decade Counters

3-27. At step 3 in the sequence, a gate pulse ($\overline{GATE}$) is generated by the range control logic. $\overline{GATE}$ is applied to one input of the main gate, U17. Refer to figure 3-8. The other main gate input is connected to the totalize (TOT) switch, S5C. If either input to U17 goes low, its output goes high. This presents a logic 1 to the J and K inputs of the first flip-flop in the LSD decade counter. The input signal is applied to the clock input of the decade counter and toggles the counter on the negative-going edge of the pulses. The output of the first counter is applied to U24 on

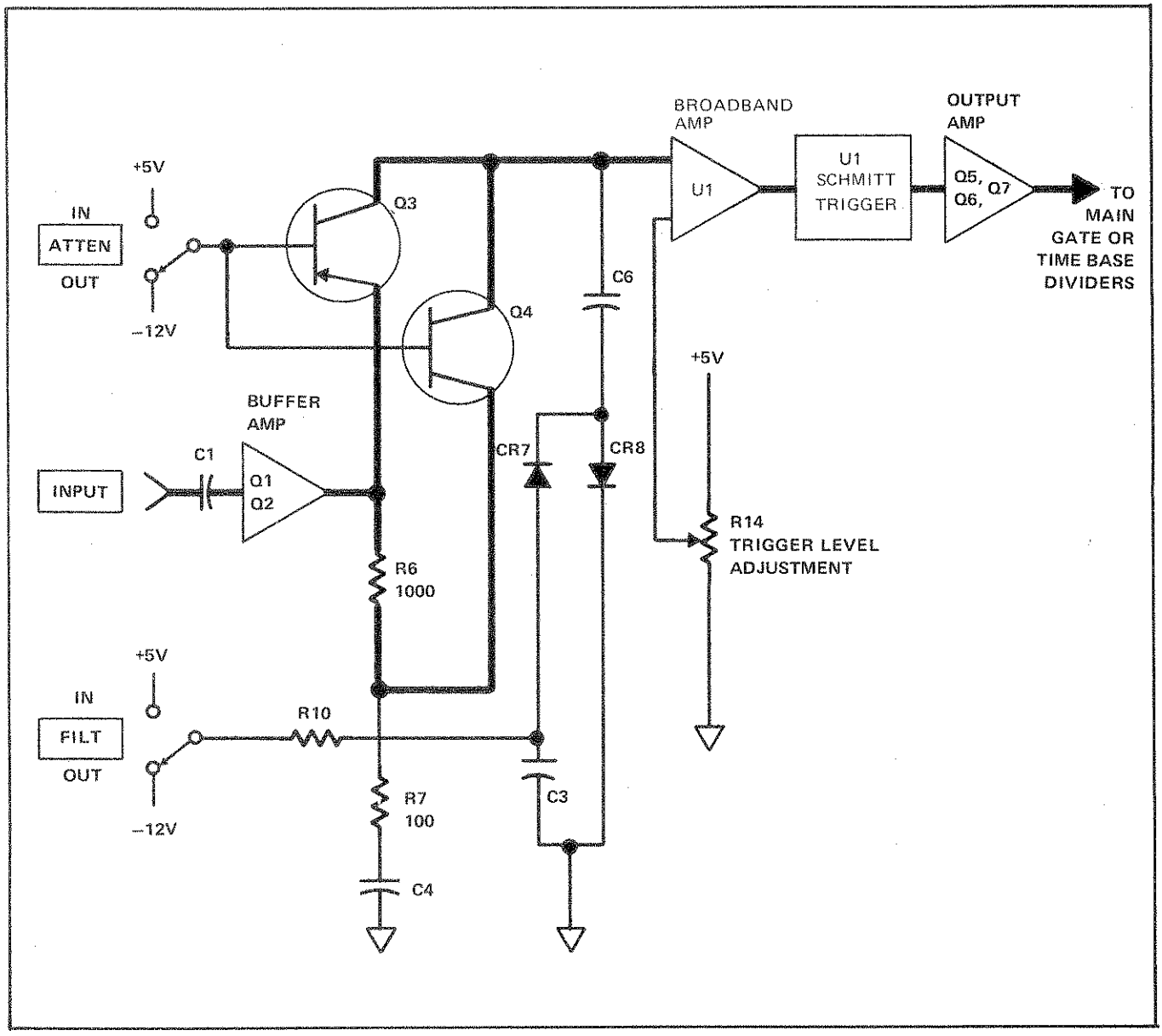

Figure 3-7 INPUT SECTION, BLOCK DIAGRAM

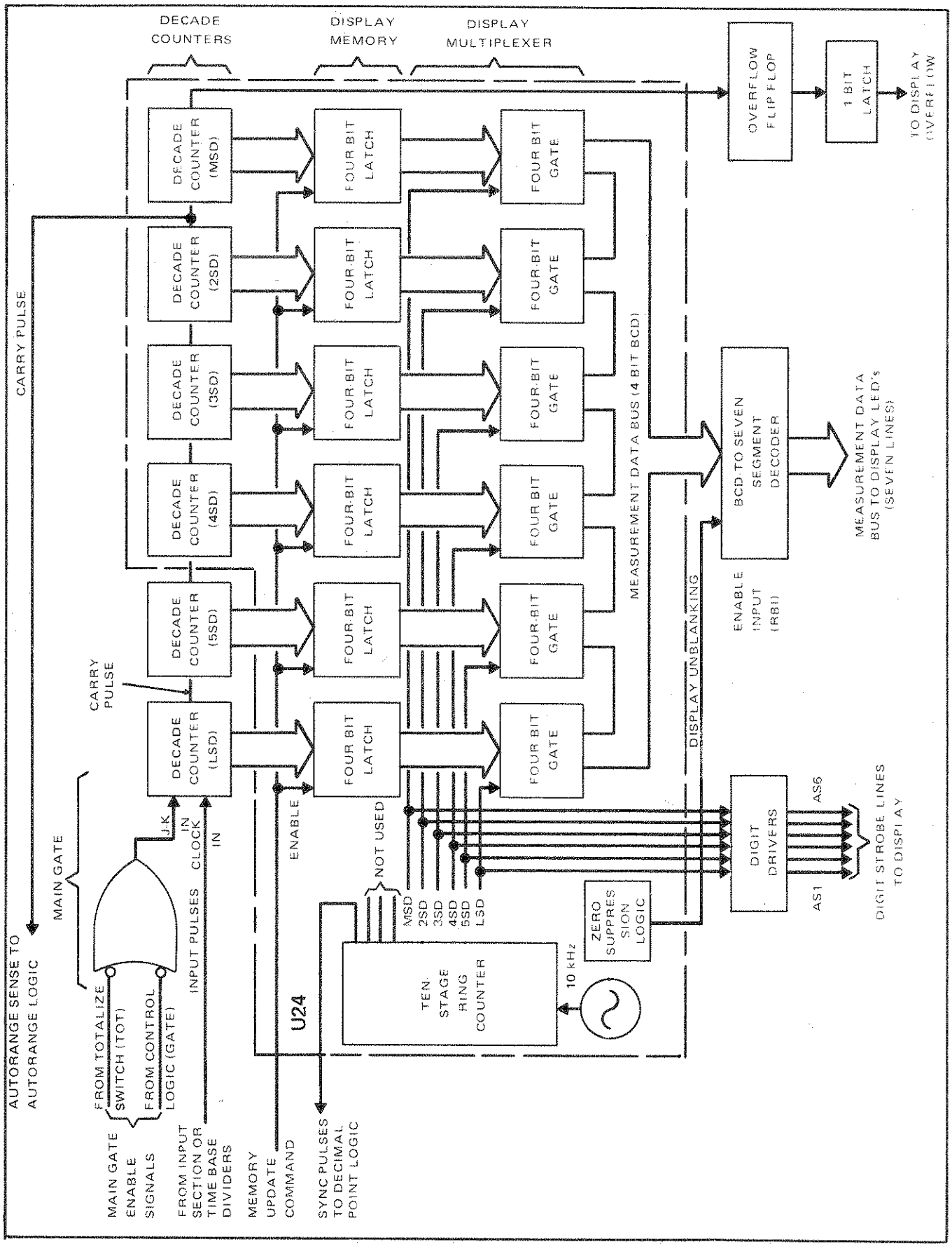

Figure 3-8. DECADE COUNTERS, DISPLAY MEMORY & DISPLAY MULTIPLEXER BLOCK DIAGRAM

four BCD lines, A, B, C, and D. The D output is also applied to the next counter (5SD). The LSD and 5SD counters are seperate ICs. The rest of the counters along with the display memory, display multiplexer, and a ring counter used to develop strobe signals are contained in U24. The fourth or D line from a counter, which is applied to the next counter, goes high when its count reaches 8 and falls low on the tenth count. The trailing edge so generated clocks the next counter. At the end of $\overline{\text{GATE}}$ both inputs to U17 are high and its output goes low. With a 0 applied to the J and K inputs of the first flip-flop, the clock input is ignored and counting ceases. The counters hold the count until GR during step 1.

3-28. Display Memory and Multiplexer

3-29. When step 7 is reached, the sequencer generates a memory update (MUP) signal. Refer to figure 3-8. At that time the contents of the decade counters are memorized in four-bit latches. A 10 kHz oscillator and 10 stage ring counter inside U24 generate strobe signals used by the display multiplexer. The multiplexer consists of a four-bit gate for each latch in the display memory. The gates are sequentially enabled by the strobe signals to apply the contents of the memory latches onto the common measurement data bus, four BCD lines. Information on the measurement data bus is decoded by a seven-segment decoder for application to the display.

3-30. Display

3-31. The display consists of six seven-segment LEDs and three annunciators. Refer to figure 3-9. Decimal LEDs are contained in the seven-segment LEDs. At the same time a strobe signal enables a gate in the display multiplexer, it enables the appropriate LED. Although the digit information is applied to all the LEDs, only one will light at a time. An LED will only be on, then, for a period of 90 μseconds, allowing a 10 μsecond guard space between digit strobes. Decimal information and signals for two of the annunciators come from the decimal point logic as will be explained later. The overload annunciator is lit by an inverted signal from U24 when the count exceeds the capacity of the display.

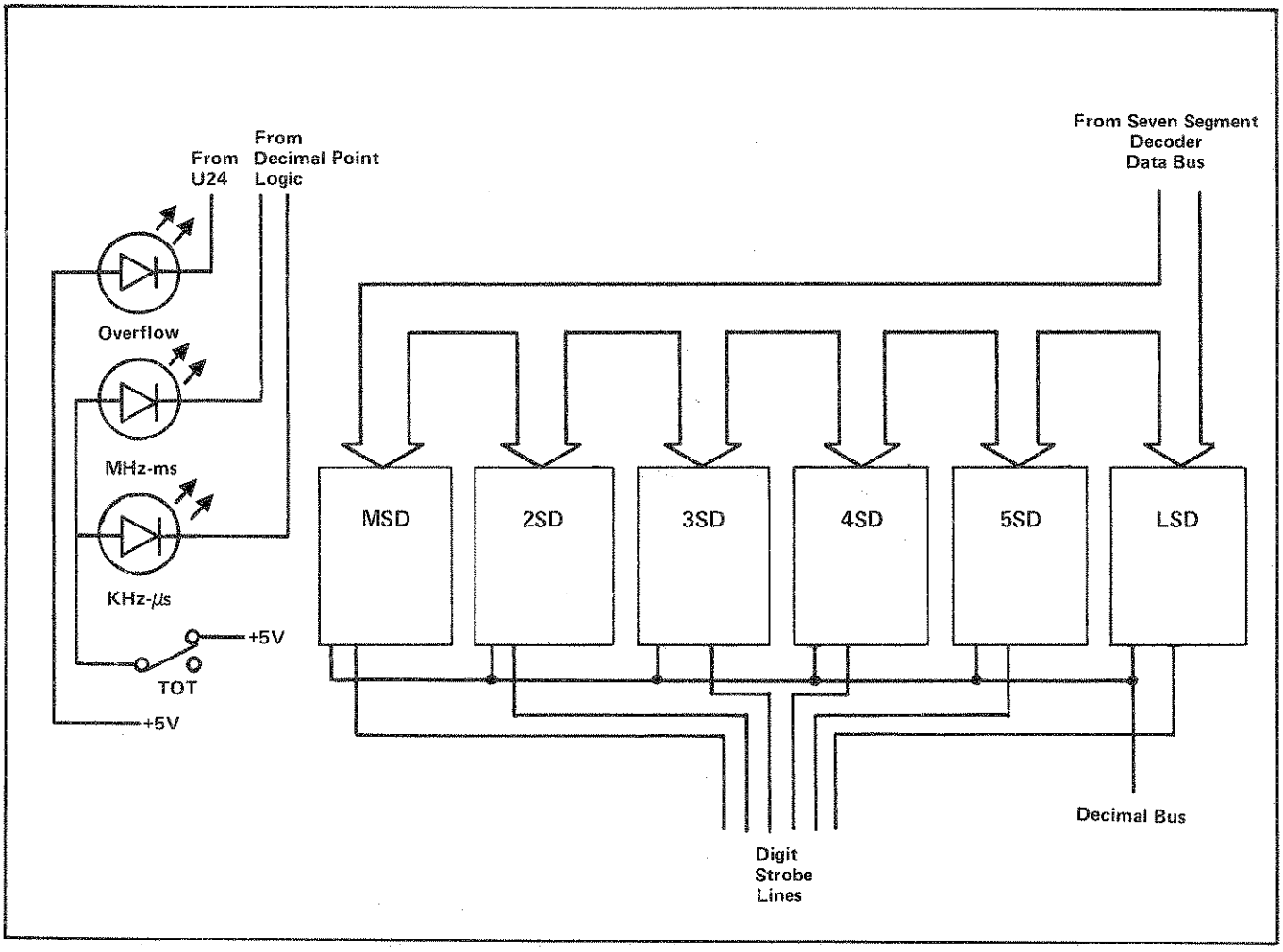

Figure 3-9. DISPLAY

3-32. Time Base

3-33. The time base section consists of a 10 MHz oscillator, a buffer amplifier (Q15), a NAND gate (U17), and a decade counter (U12). Refer to figure 3-10. Q16 is configured as a colpitts oscillator whose frequency is controlled by crystal Y1. Buffer amplifier, Q15, drives the NAND gate, U17, which provides further buffering. U12 divides the 10 MHz oscillator signal by ten to obtain the 1 MHz time base. U12 is held reset to 0 by the RMAX output from the sequencer being high. During step 3 of the sequence RMAX goes low and enables U12 to count. In the frequency and self-check modes the 1 MHz output from U12 is applied to the time base dividers of the range control logic. It is also the frequency counted in the self-check mode. In the period mode the 10 MHz output from the time base is the frequency counted. 10 MHz is used to optimize resolution when measuring short periods.

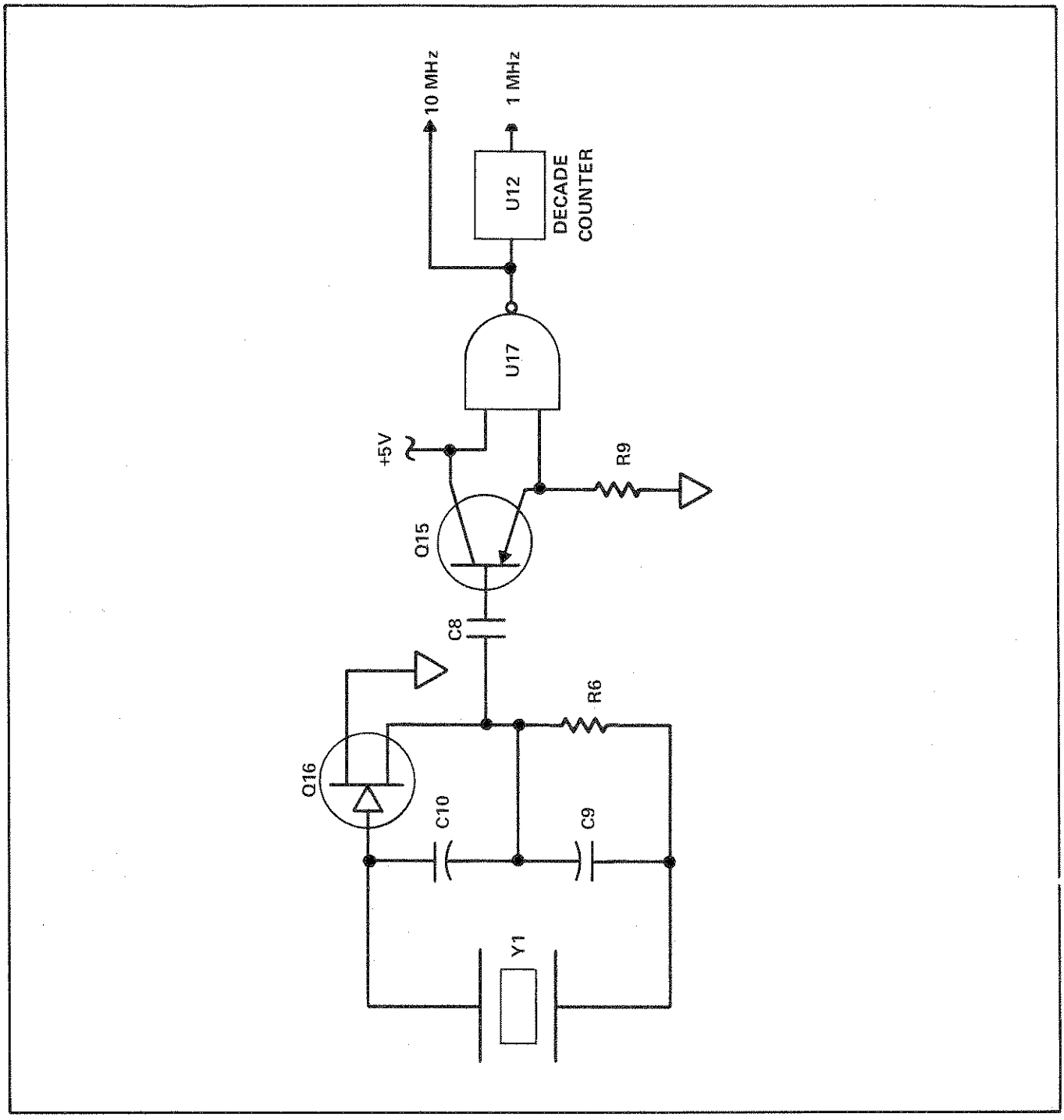

Figure 3-10 TIME BASE OSCILLATOR, BLOCK DIAGRAM

3-34. Range Control Logic

3-35. Range control logic consists of the range switches, an iteration counter (U13), time base dividers (U7), and a gate time flip-flop (U8). Refer to figure 3-11. The range switches program the iteration counter through four NAND gates (U18). The outputs of U18 are connected to the set and reset inputs of U13. When all inputs to U18 are high, all outputs are low, and the iteration counter will respond to a clock input from the autorange logic. For manual range programming, a range switch places a 0 on two inputs of

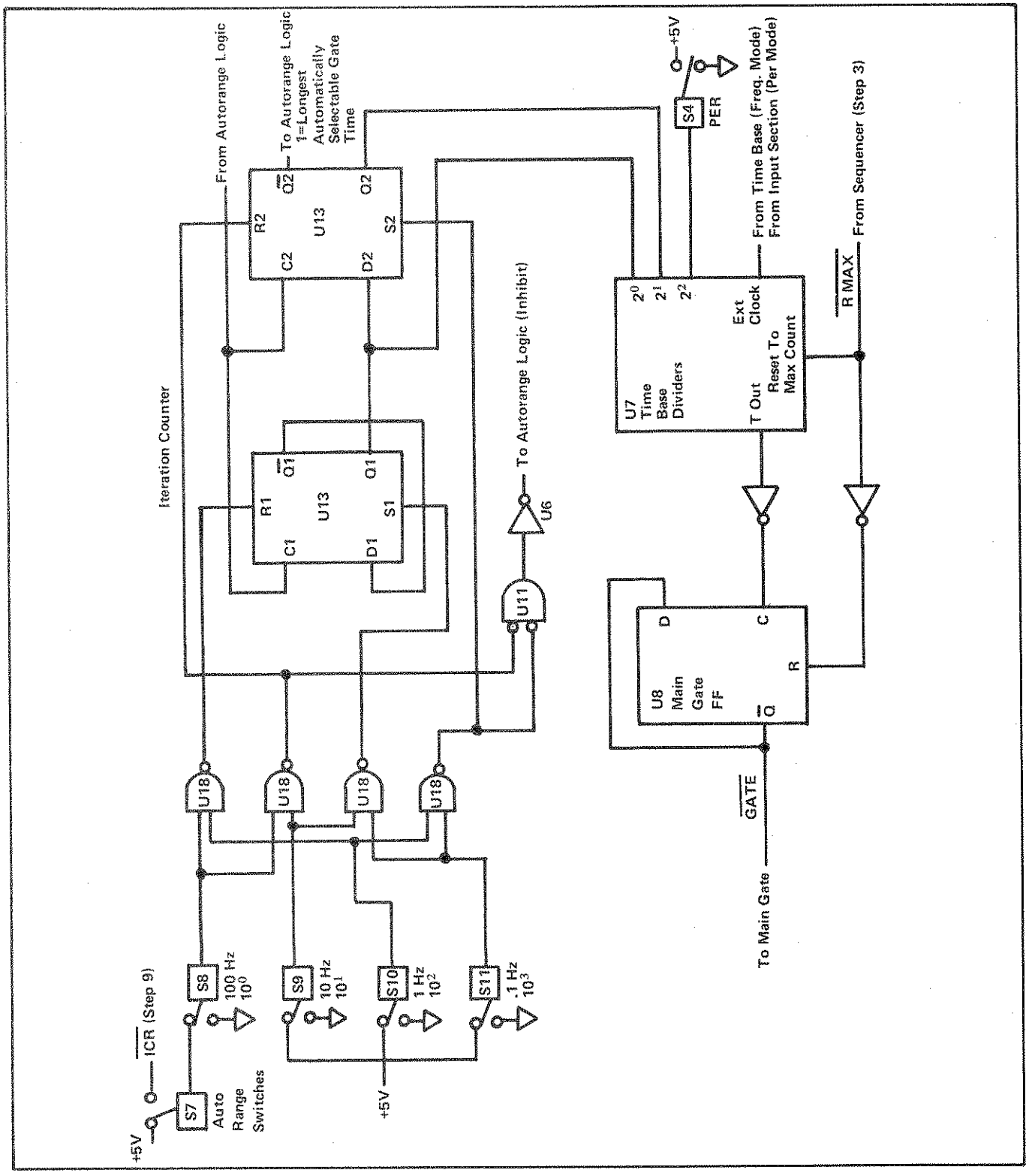

Figure 3-11. RANGE CONTROL LOGIC

U18. The iteration counter outputs are then set for that range. Autoranging is inhibited by a 1 output from one section of U6. When autorange is selected, two inputs to U18 are connected to the $\overline{ICR}$ output from the sequencer. At step 9 $\overline{ICR}$ goes low and resets the iteration counter to the shortest gate time. If at step 5 the autorange conditions are not satisfied, the autorange logic outputs a 1 to clock the iteration counter to the next longer gate time and to reset the sequence to step 1. When the third range has been automatically selected, the Q2 output from U13 will be high. Q2 then will be low and will inhibit the autorange logic from further increasing the gate time.

3-36. Outputs from the iteration counter are applied to the time base dividers, U7, and to the decimal point logic. Table 3-2 shows the programming of the time base dividers. External clocking, applied to U7, is divided to derive the gate time. In the frequency and self-check modes, 1 MHz from the time base is used. In the period mode, the signal from the input section is used. Note that the 2^2 input to U7 is from the PER switch. A 1 from the PER switch programs U7 for the three least division ratios (10^0, 10^1, 10^2) used in the period mode.

Table 3-2. TIME BASE DIVIDER RATIOS (U7)

RANGE CODE LINES TO U7			Division Factor Input/Output	Front-Panel Selected Resolution/ Periods Averaged
RNG2 (PIN 12)	RNG1 (PIN 13)	RNG0 (PIN 14)		
0	0	0	10^0	10^0
0	0	1	10^1	10^1
0	1	0	10^2	10^2
0	1	1	10^3	10^3
1	0	0	10^4	100Hz
1	0	1	10^5	10Hz
1	1	0	10^6	1Hz
1	1	1	10^7	0.1Hz

3-37. At step 3 in the sequence, the $\overline{RMAX}$ signal is applied to U7. All the counters in U7 have been set to maximum count (all nines) by $\overline{RMAX}$ having been high and the T Out output of U7 is high. As previously stated the $\overline{RMAX}$ signal enables the counter in the time base section. On the first pulse from the time base section (or from the input section in the period mode) T Out falls low. The trailing edge from T Out is inverted and applied to U8 as its clock. U8 flops and outputs the $\overline{GATE}$ signal. The counters in U7 are now counting. Just before the count reaches the desired division ratio, T Out goes high due to an 8 in the selected counter in U7. When the selected counter in U7 receives its tenth pulse, T Out again falls low and the trailing edge is inverted to clock U8. U8 flips to inhibit the $\overline{GATE}$ signal. $\overline{RMAX}$ then goes high and resets U7 to maximum count.

3-38. Decimal Point Logic

3-39. Outputs from the iteration counter (RNG1 and RNG0) are applied to the date inputs of two "D" type flip-flops in the decimal point logic. Refer to figure 3-12. During step 7 in the 1900A sequence, the MUP signal clocks the data into the flip-flops. The Q and $\overline{Q}$ outputs from the flip-flops are applied to five NAND gates. One of the NAND gates is used to select a unit annunciator (MHz-ms or kHz-μs). The outputs from four of the NAND gates are applied to a negated-input OR gate, U9. The desired output from U9 is a positive pulse or 1 during the strobe pulse which will corrently place the decimal point. Strobes 2, 3 and 4 (counting from the LSD) are applied to the four NAND gates used in decoding the range information. Range information is applied to the four gates in such a way that two ones (1s) will be on only one of the NAND gates for each range. This sets up the NAND gate so that when the strobe applied to its third input goes high, its output will go low. A low input to U9 will force its output to go high. The output of U9 is applied through the TOT switch (decimals are not used in the totalize mode) to U24 and the decimal driver (Q14). The decimal driver enables the decimal segment of the appropriate LED to light. U24 utilizes the decimal input to prevent zero blanking after the decimal point.

3-40. Autorange Logic

3-41. The autorange logic consists of three "D" type flip-flops and three logic gates. Refer to figure 3-13. The function of the autorange logic is to output a positive pulse to clock the iteration counter and to reset the sequencer to step 1 if optimum range conditions have not been met. Optimum range conditions are defined as the MSD greater than or equal to one. A hysteresis provision has been added so that if the MSD = 1 in a measurement, the 2SD of the succeeding measurement (if MSD < 1) must fall below 8 before a range change will be initiated.

3-42. A four-input NAND gate (U9) is the main control gate for the autorange logic. One of the inputs to U9 is from the sequencer. At step 5 the sequencer applies a 1 to U9, enabling it to sense the condition of the autorange logic. If any input to U9 is a 0, its output is a 1 which is inverted and no clock pulse exists. Another input to U9 is from the iteration counter, which goes to 0 in the 1 Hz-10^2 Periods range. A longer gate time cannot be selected, then, by the autorange logic. The other two inputs to U9 are derived from the state of the 2SD counter.

3-43. Autorange Sense is taken from U24: the output of the 2SD counter (D5D), which is high when the 2SD count

equals 8 or 9. Autorange Sense is applied to a two-input NAND gate (U5), and after inversion to the MSD=1 flip-flop. On the tenth count of the 2SD counter (MSD=1), Autorange Sense falls low. After it is inverted, the trailing edge so produced clocks the MSD=1 flip-flop. The Q output from the MSD=1 flip-flop goes to 1 and the Q output goes to 0. Q from the MSD=1 flip-flop clocks the MSDM flip-flop so that its Q output equals 1. When Autorange Sense again goes from high to low (MSD > 1), the MSD=1 flip-flop is clocked again. Its Q output goes to 0 and its Q goes to 1, which clocks the MSD > 1 flip-flop. Since the data input to the MSD > 1 flip-flop is tied to +5V, its Q output will now remain equal to 1 no matter how many more times it is clocked.

3-44. Two of the inputs to the autorange control gate, U9, are from U5 and U11. U11, a NOR gate, outputs a 0 (producing satisfied range conditions) if either input is a 1. One input to U11 is from the MSD=1 flip-flop and the other input is from the MSD > 1 flip-flop. So if either flip-flop has been clocked, a 1 will be applied to U11 and the range conditions will be satisfied. U5 provides the hysteresis effect. Both its inputs must equal 1 to get a 0 out. One input to U5 is from the MSDM flip-flop. The other input is from Autorange Sense. At step 7 of the sequence, MUP will reset the MSDM flip-flop if the MSD of the measurement was greater than 1. The output of a negated-input NAND gate (U11) is used to reset the MSDM flip-flop. One input to U11 is the MUP signal. The other input is from the Q output of the MSD > 1 flip-flop. Therefore the MSDM flip-flop cannot be reset unless the MSD is greater than 1. If in the next measurement the MSD = 0, the MSDM will prevent a range change unless Autorange Sense is also 0, that is the 2SD is less than 8.

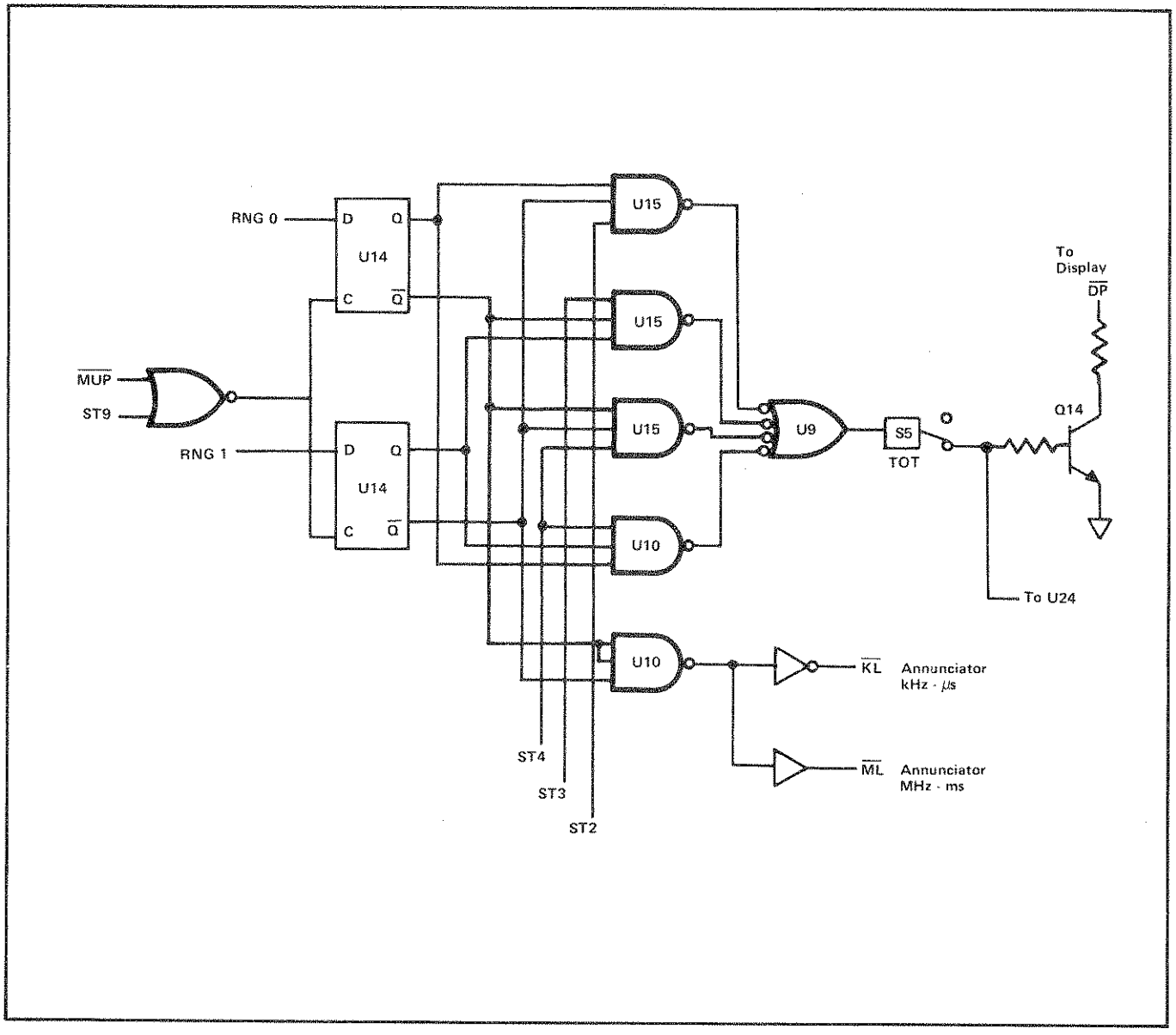

Figure 3-12. DECIMAL POINT LOGIC

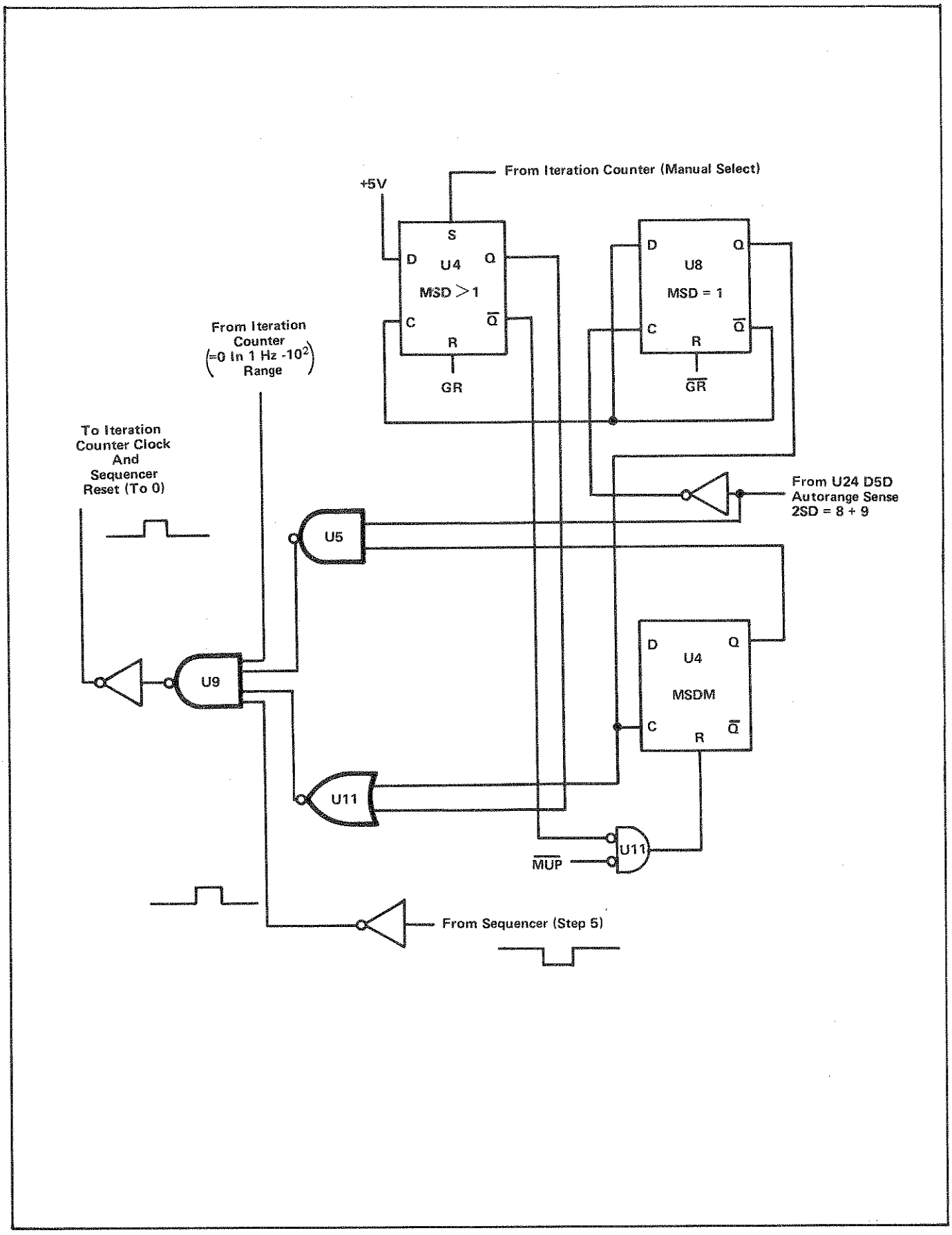

Figure 3-13. AUTORANGE LOGIC

Section 4
Maintenance

4-1. INTRODUCTION

4-2. This section contains information concerning preventive and corrective maintenance for the Model 1900A Multi-Counter. A maintenance interval of one year for calibration is recommended to ensure instrument operation within the one year specifications. Equipment for performing maintenance tests and adjustments is listed in Table 4-1. If this equipment is not available, other equipment having equivalent specifications may be used.

NOTE

When greater than one year accuracy is required, refer to specifications for timebase aging rate to determine the re-calibration interval required to maintain desired accuracy.

4-3. SERVICE INFORMATION

4-4. Should your instrument need repair, send it to the nearest factory authorized service center. A list of these authorized service centers is located in section 7. Located on the inside front cover is the WARRANTY which warrants the instrument for a period of one year. of one year.

4-5. GENERAL MAINTENANCE

4-6. Access

4-7. Use the following procedure to gain access to the interior of the Model 1900A.

a. With the power switch OFF, disconnect the line cord.

b. Remove the Phillips screw at the rear of the instrument case.

c. Remove the instrument from the case.

4-8. Cleaning

4-9. Clean the front panel and case with denatured alcohol or mild solution of detergent and water. Do not use aromatic hydrocarbons or chlorinated solvents because they will react with the plastic materials of the instrument.

4-10. Fuse Replacement

4-11. The input power fuse, F1, is located within the instrument in a fuse clip near the power transformer (T1). To gain access to the fuse, refer to paragraph 4-6. When replacement is required, install AGC 1/4A (fast acting) for line powered instruments. Use MDA ½A (slow blow) for battery powered instruments.

4-12. PERFORMANCE CHECKS

4-13. The performance checks provide a means of verifying overall operation of the Model 1900A. The checks can be used as an acceptance check during incoming inspection or as a periodic maintenance check. Refer to Table 4-1 for a list of required test equipment. Equivalent equipment may be used.

4-14. Functional Check

4-15. To perform a functional check of the Model 1900A, refer to the self-check described in Section 3.

4-16. Sensitivity Check

4-17. Perform the sensitivity checks as follows:

Table 4-1. TEST EQUIPMENT REQUIRED FOR PERFORMANCE TEST, CALIBRATION AND TROUBLESHOOTING

EQUIPMENT NOMENCLATURE	RECOMMENDED MODEL	WHERE USED
Quartz Oscillator Frequency Standard with 10 MHz Output		Timebase Oscillator Adjustment
Low-Frequency Oscillator	HP204D	
High-Frequency Oscillator	HP8654A	
RF millivoltmeter with 50Ω terminator	Boonton 91C	Sensitivity Check
Multimeter	Fluke 8000A	Troubleshooting
Oscilloscope	Tek 465	Troubleshooting

a. Connect the low frequency generator, set for 5 Hz at 25mV, to the 1900A input.

b. Energize the counter and depress the FREQ function switch and AUTO resolution switch.

c. Confirm that the counter display indicates .005 kHz ± 1 digit.

d. Disconnect the low frequency generator from the input.

e. Connect the high frequency generator, terminated into 50 ohms, to a T-connector on the 1900A input. Set the generator output for 10 MHz at approximately 25mV rms. or 70.7mV p-p from SG-503

g. Connect the RF millivolt meter to the T-connector on the input of the 1900A.

h. Adjust the high frequency generator output for a reading of exactly 25mV on the RF millivolt meter. MDS ≤ 70.7 mV p-p from SG-503

i. Confirm that the counter display indicates 10.0000 MHz ± generator accuracy.

j. Change the generator output to 80 MHz at exactly 25mV. MDS ≤ 70.7mV p-p from SG-503

k. Confirm that the counter display indicates 80.0000 MHz ± generator accuracy.

4-18. CALIBRATION

4-19. Calibration of the Model 1900A is limited to adjustment of the trigger level and time base oscillator frequency.

4-20. Trigger Level Adjustment

4-21. Trigger level adjustment should be performed whenever repairs have been made to the input section of the counter. The input section comprises that circuitry contained on the input printed circuit board assembly. Perform trigger level adjustment as follows:

a. Remove the counter from the case (paragraph 4-6)

b. Energize the counter and connect the high-frequency oscillator to the counter input.

c. Select an output of 25 mV rms at approximately 80 MHz on the oscillator.

d. Adjust the trigger level control (R14) to a mid-point which produces a stable display near 80 MHz.

e. Reduce the signal level until the display becomes unstable.

f. Re-adjust the trigger level control until the display is again stable.

g. Repeat steps e and f until no additional sensitivity increase is possible.

4-22. Time-Base Oscillator Adjustment

4-23. Time base oscillator adjustment should be made whenever the oscillator is repaired, or whenever it is determined that accuracy of the counter is not within the accuracy desired. Perform time base oscillator adjustment in an environment having an ambient temperature of +22°C to +25°C (72°F to 77°F). Allow the instrument to warm up at least 30 minutes with the case on before adjusting the time base.

4-24. Timebase Adjustment Using A Frequency Standard

a. Remove the counter from the case (paragraph 4-6)

b. Energize the counter and select the FREQ function and 10 Hz resolution.

c. Select a 10 MHz output on the quartz oscillator and connect the 10 MHz signal to the counter input.

d. While observing the counter display, adjust the time base oscillator control (C11 located on the main pcb directly behind the reset switch) to obtain a reading of 000000 ± 1 digit.

4-25. TROUBLESHOOTING

4-26. Introduction

4-27. The following information is designed as an aid in troubleshooting the 1900A multi-counter. Figures 4-2 to 4-6 are flow charts directed toward specific problems. Figure 4-1 shows the location of test points and table 4-2 gives the electrical location of the test points and what to expect at each point. Theory of Operation, section 3, and repair techniques, later in section 4, should be read and understood before attempting to troubleshoot the instrument.

4-28. Initial Troubleshooting

4-29. Thoroughly inspect the unit for physical damage such as broken parts, shorted leads, or other visually discernible problems. Recheck input connections and switch settings to be sure the problem actually is in the 1900A.

4-30. Power Supply

4-31. The power supplies should be checked first in the event of a 1900A malfunction. Remove the case as described in paragraph 4-6. Apply ac power. Test point 1 is the +5V regulated supply. Its limits for the line version are +4.75V to 5.25V with no more than 100mV p-p ripple. With the battery option the limits are +4.5V to 5.5V with no more than 500mV p-p ripple. Test point 2 is the -12V supply whose limits are -10.5V to -12.0V with no more than 100mV p-p ripple for either version.

4-32. Fault Isolation

4-33. Perform the self-check as described in section 2. Observation of the symptoms evident in the self-check mode should provide clues as to the location of the problem. If the unit performs the self-check satisfactorily the problem is probably in the input section. If the problem is decimal point related, the operation of the iteration counter and decimal point logic should be checked. No display or a missing digit probably indicates U23 or U24. Missing segments in the display probably indicates U23 or one or more faulty LEDs. No counting action or an erroneous count probably indicates program control, time base, or main gate/decade counter problems.

4-34. Input Section

4-35. Apply a 1V p-p signal to the 1900A BNC connector. Choose a frequency which has good waveform resolution on the oscilloscope. At the gate of Q1 the signal should be .5V p-p with no distortion (the voltage levels given are approximate). Distortion of the input, visible at the gate of Q1, begins at about 4V p-p input level. The emitter of Q3 should have 1.5V p-p as should pin 10 of U1. Depressing the FILT switch (looking at pin 10 of U1) should diminish the level slightly even at low frequencies. The roll-off of the filter is gradual. Succeeding waveforms are square waves with a spike on the leading edge. Outputs from U10 (pins 7, 3, 15) are approximately 1.25V p-p. The output of the input section (TP4) should be a square wave with spikes on the leading edge going positive from near OV to +5V.

4-36. Time Base

4-37. The voltage on the base of buffer Q15 should be about 9V p-p. TP3 should have 6V p-p of a moderately distorted sine wave. The output of U12 is a square wave with a spike on the trailing edge and ripple on the top of the waveform.

4-38. Sequencer

4-39. The output of the relaxation oscillator should be a 5V square wave. A differentiated square wave, about 10V in amplitude should be at pins 5 and 6 of U1. TP8 is a 5V square wave. The frequency of the relaxation oscillator should be around 100 Hz, interrupted by the duration of the gate signal. The outputs of U3 are normally at +5V and go low to near OV to select an event.

4-40. Control Logic and Counters.

4-41. To check the iteration counter, manually select the ranges and check the outputs against table 3-2. Troubleshooting the rest of the circuitry is best accomplished by checking for output pulses from the circuitry sections, keeping in mind the oscillator which governs the duration of the pulse and the place of the pulse in the sequence.

4-42. REPAIR TECHNIQUES

4-43. Battery-Powered Instruments

4-44. In battery-powered instruments, one of the batteries should be removed before attempting any repair. This is necessary to eliminate the danger of shorting portions of the circuitry which carry the battery voltage. Remove the battery as described in Section 6.

4-45. Integrated Circuit Replacement

4-46. Three types of integrated circuits are used in the Model 1900A, as listed in Table 4-3. The handling of TTL types require no special handling. However, the CMOS and PMOS types can be destroyed by a static electricity discharge. To prevent damage due to static discharge, the following precautions should be taken whenever this type of integrated circuit is handled:

a. The PMOS or CMOS integrated circuit is packed in conductive foam. Do not remove the conductive foam from the integrated circuit until ready for installation into the unit.

b. Be sure the repairing personnel and the unit under repair are commonly grounded.

c. Be sure the soldering iron used is grounded to the common ground.

Table 4-2. TEST POINT DESCRIPTIONS

TEST POINTS	ELECTRICAL LOCATION	DESCRIPTION
1	+5V reg.	+4.75V to +5.25V (≤100mV ripple) line. +4.5V to +5.5V (≤500mV ripple) –01 Option
2	–12V	–10.5V to –12.0V (≤100mV ripple)
3	U17	Timebase 10 MHz Sine, moderately distorted
4	Output of Input PCB	OV to +5V Square wave
5	U6 & U16	$\overline{GR}$ +5V to OV pulse
6	U19	GR OV to +5V pulse
7	U8 (1)	Gate time flip-flop ($\overline{GATE}$) +5V to OV pulse
8	U2	Clock input to sequencer OV to +5V pulses
9	U4 (1)	MSDM flip-flop OV to +5V when MSD ≥1
10	U23	Display LED segment test ground to test all segments (except decimals)

Table 4-3. MODEL 1900A INTEGRATED CIRCUIT TYPES.

REFERENCE DESIGNATOR	TYPE	REFERENCE DESIGNATOR	TYPE	REFERENCE DESIGNATOR	TYPE
U1	CMOS	U10	CMOS	U19*	TTL
U2*	TTL	U11	CMOS	U20*	TTL
U3*	TTL	U12*	TTL	U21*	TTL
U4	CMOS	U13	CMOS	U22	CMOS
U5	CMOS	U14	CMOS	U23*	TTL
U6	CMOS	U15	CMOS	U24	PMOS
U7	PMOS	U16	CMOS	U25	R
U8*	TTL	U17*	TTL		
U9	CMOS	U18	CMOS		

* For -01 Battery Option, low power TTL devices are being used and consistency should be maintained. See Section 5 for part numbers and serial number effectivity.

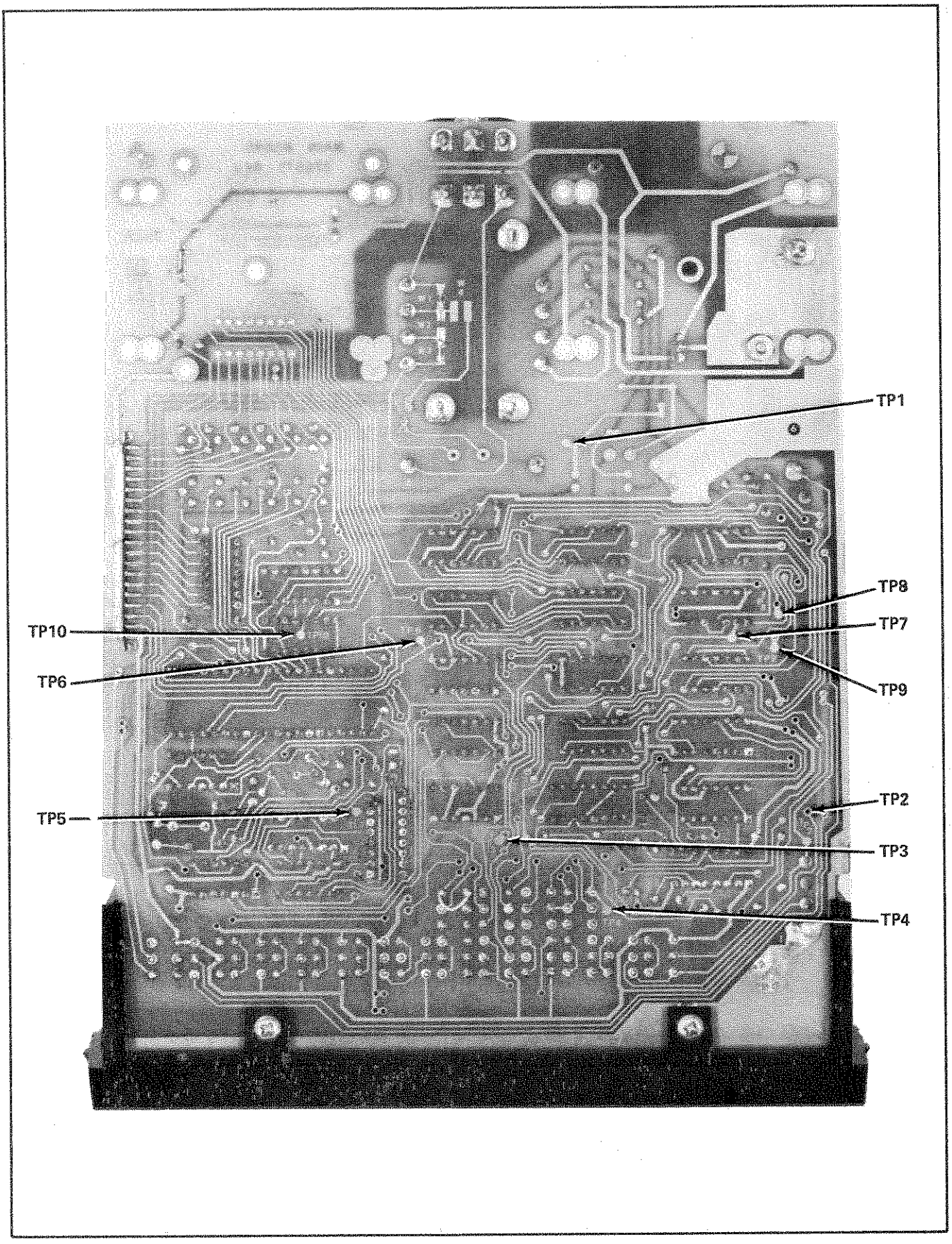

Figure 4-1. TEST POINT LOCATIONS

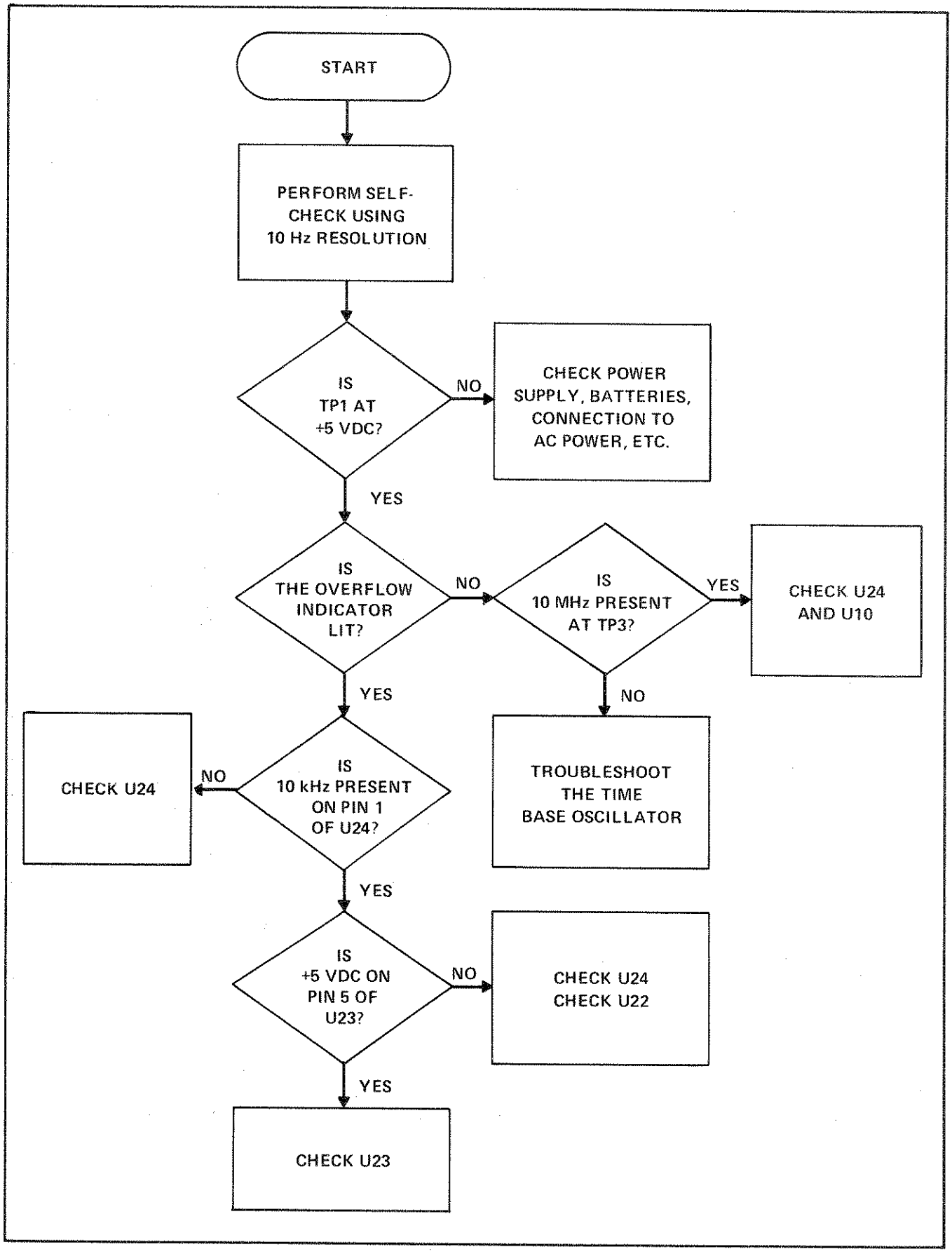

Figure 4-2. FAULT ISOLATION – NO DISPLAY

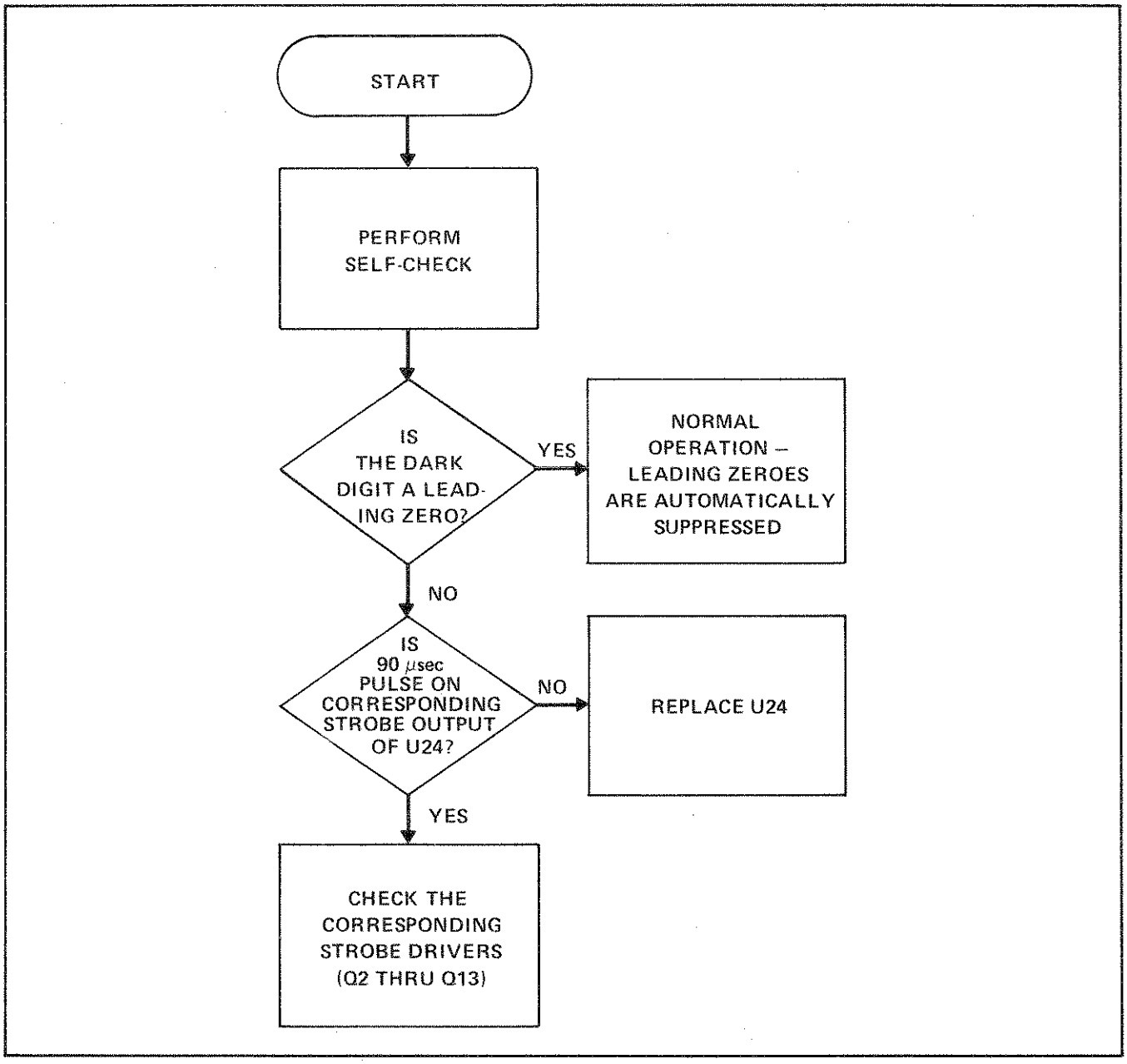

Figure 4-3. FAULT ISOLATION – ONE DARK DIGIT

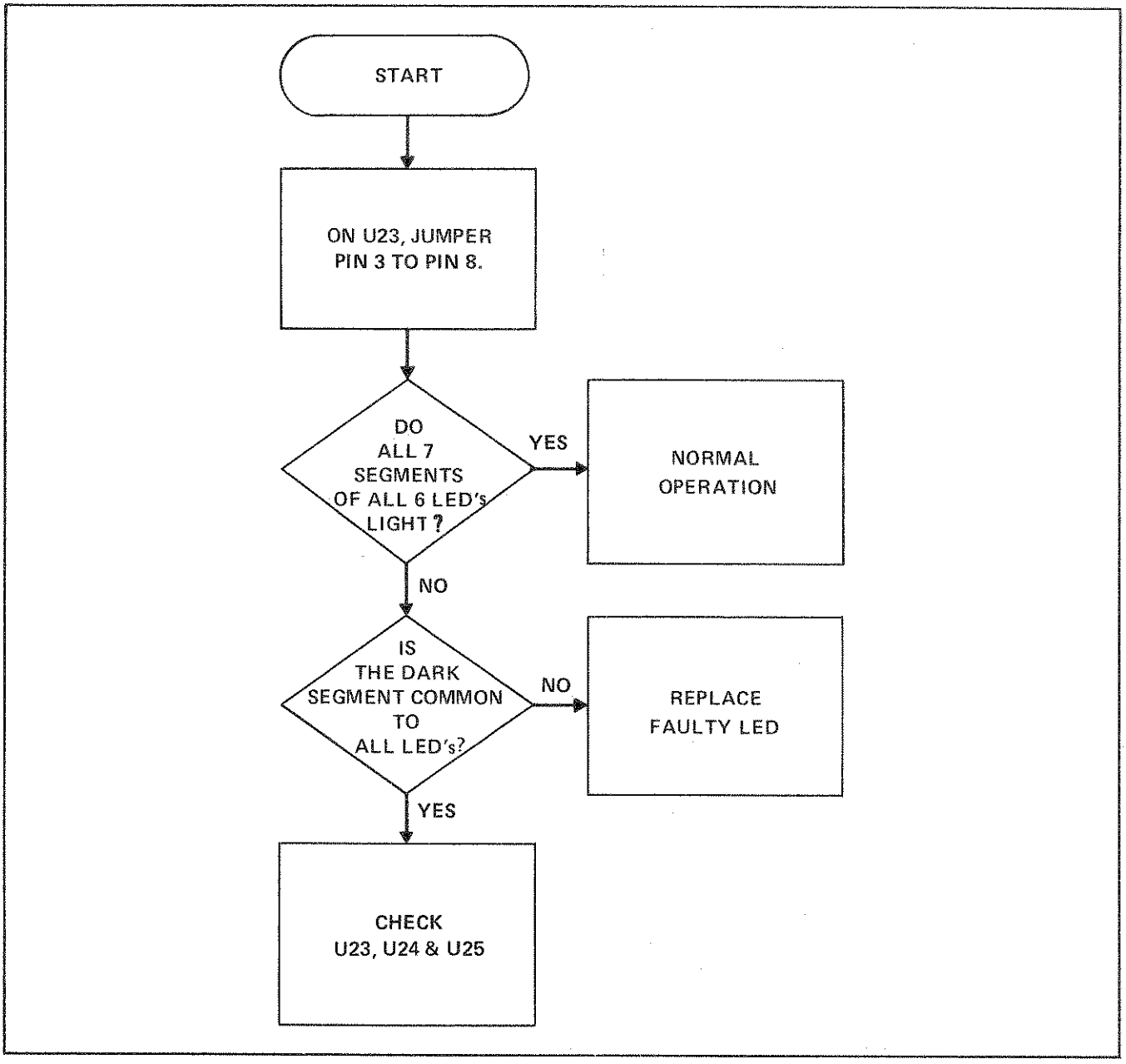

Figure 4-4. FAULT ISOLATION – DARK LED SEGMENT

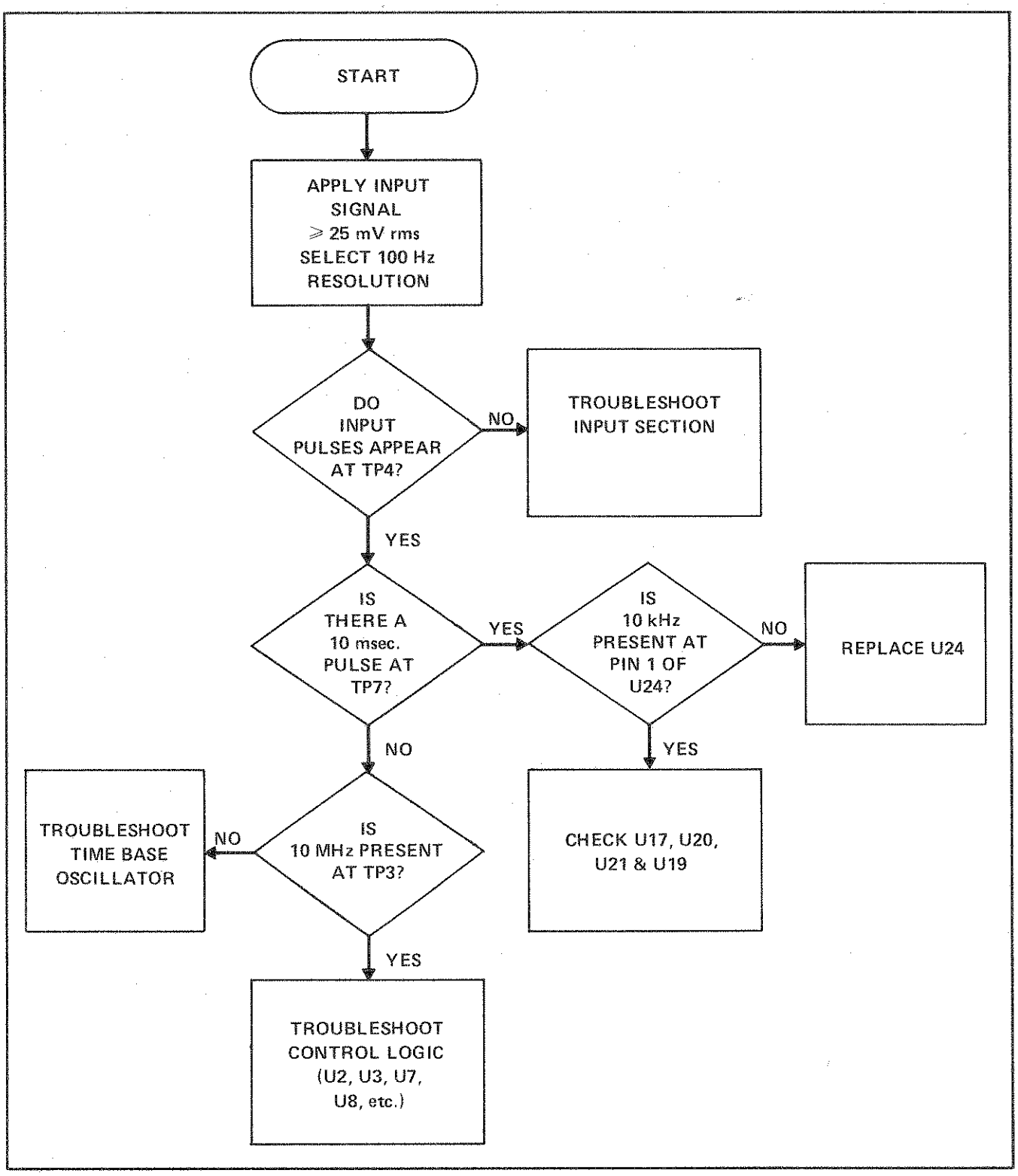

Figure 4-5. FAULT ISOLATION – NO COUNTING ACTION

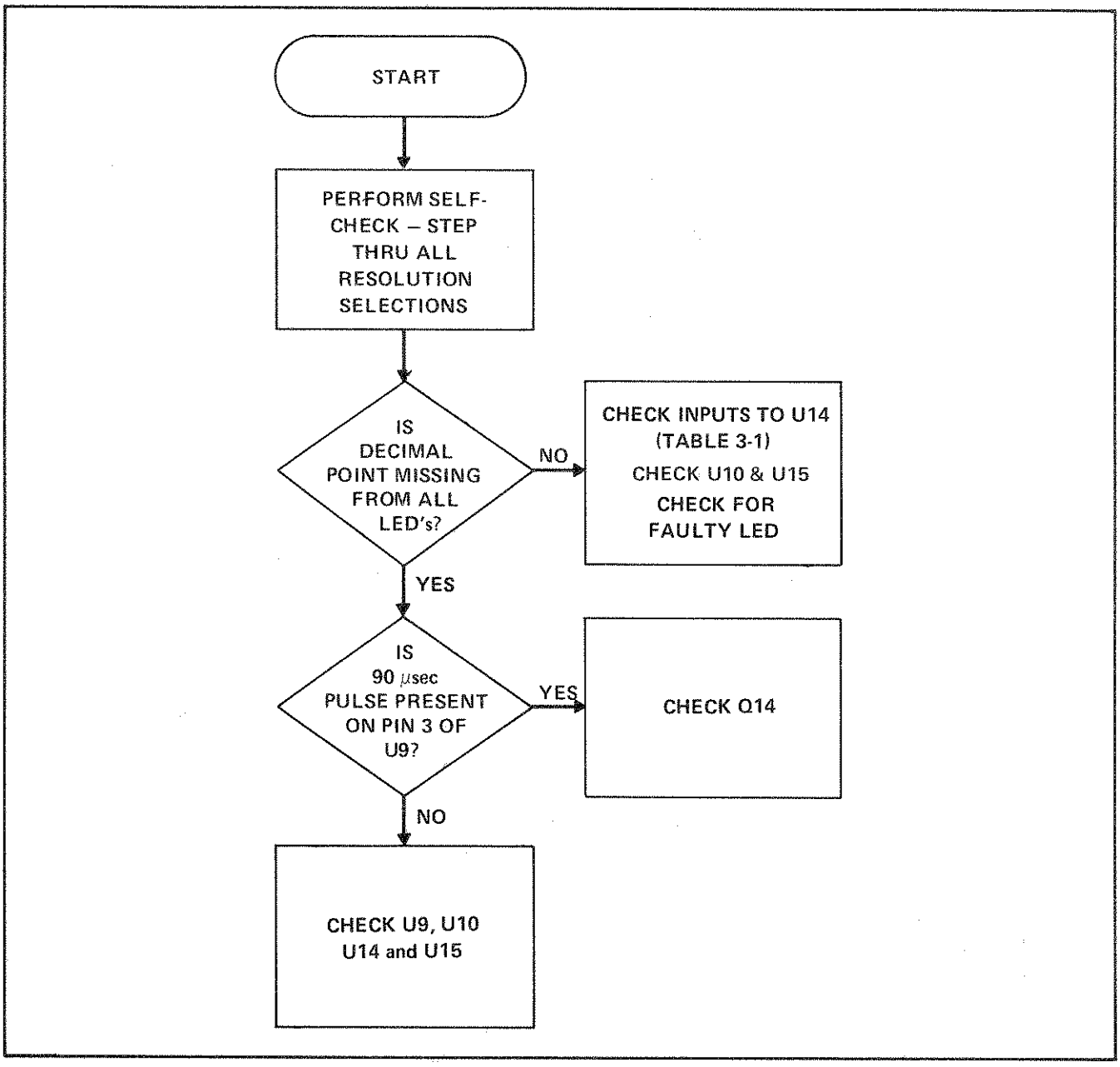

Figure 4-6. FAULT ISOLATION – DECIMAL POINT MISSING

Section 5

Lists of Replaceable Parts

TABLE OF CONTENTS

ASSEMBLY NOMENCLATURE	PART NO.	PAGE
Final Assembly	1900A	5-3
Main PCB Assembly, Line Configuration	385021	5-5
Main PCB Assembly, Battery Configuration	378083	5-9
Input PCB Assembly	378125	5-13
Display PCB Assembly	378109	5-16
Inverter PCB Assembly	388447	5-18
DOU PCB Assembly	388470	5-20

5-1. INTRODUCTION

5-2. This section contains an illustrated parts breakdown of the instrument. Components are listed alphanumerically by assembly. Electrical components are listed by item number. Each listed part is shown in an accompanying illustration.

5-3. Parts lists include the following information:

a. Reference Designation or Item Number.

b. Description of each part.

c. Fluke Stock Number.

d. Federal Supply Code for Manufacturers. (See Appendix A for Code-to-Name list.)

e. Manufacturer's Part Number or Type.

f. Total Quantity per assembly or component.

g. Recommended Quantity: This entry indicates the recommending number of spare parts necessary to support one to five instruments for a period of two years. This list presumes an availability of common electronic parts at the maintenance site. For maintenance for one year or more at an isolated site, it is recommended that at least one in each assembly in the instrument be stocked. In the case of optional subassemblies, plug-ins, etc., that are not always part of the instrument, or are deviations from the basic instrument mode, the REC QTY column lists the recommended quantity of the item in that particular assembly.

h. Use Code is provided to identify certain parts that have been added, deleted or modified during production of the instrument. Each part for which a use code has been assigned may be identified with a particular instrument serial number by consulting the Use Code Effectivity, paragraph 5-7.

5-4. HOW TO OBTAIN PARTS

5-5. Components may be ordered directly from the manufacturer by using the manufacturer's part number, or from the John Fluke Mfg. Co., Inc. factory or authorized representative by using the FLUKE STOCK NUMBER. In the event the part you order has been replaced by a new or improved part, the replacement will be accompanied by an explanatory note and installation instructions, if necessary.

5-6. To ensure the prompt and efficient handling of your order, include the following information:

a. Quantity.

b. FLUKE Stock Number.

c. Description.

d. Reference Designation or Item Number.

e. Printed Circuit Board Part Number.

f. Instrument Model and Serial number.

5-7. USE CODE EFFECTIVITY LIST

USE CODE	SERIAL NUMBER EFFECTIVITY
A.	0455000 and on

CAUTION!

⊗ **Indicates devices are subject to damage by static discharge.**

Table 5-1 FINAL ASSEMBLY

REF DESIG OR ITEM NO.	DESCRIPTION	FLUKE STOCK NO.	MFG FED SPLY CDE	MFG PART. NO. OR TYPE	TOT QTY	REC QTY	USE CDE
	FINAL ASSEMBLY Figure 5-1		**1900A**				
1	Main PCB Assembly, Line						
1	Main PCB Assembly, Battery						
	Input PCB Assembly	378406	89536	378406	1		
2	Display PCB Assembly	378398	89536	378398	1		
3	Inverter PCB Assembly	388454	89536	388454	1		
4	Dou PCB Assembly 1	388470	89536	388470	1		
5	Case, Molded Plastic	330076	89536	330076	1		
5	Case, Molded Plastic 1	384800	89536	384800	1		
6	Handle, Molded Plastic	330092	89536	330092	1		
7	Front, Panel	378067	89536	378067	1		
8	Pad, Foot	338632	89536	338632	2		
9	Decal, Knob	347401	89536	347401	2		
10	Washer, Flat	340505	89536	340505	2		
11	Socket, I.C. 1	276535	91506	316-AG39D	1		
	Line Cord	343723	89536	343723	1		
	Retainer, Neoprene	352484	77969	9109E	2		
	Coax Cable Assy.	395103	89536	395103	1		
	Receptacle, BNC	152033	95712	30355-1	1		
	Lens	384701	89536	384701	1		
	Front Decal	381434	89536	381434	1		
	Solder Lug	441972	79963	761	1		
1	-02 Dou Option						

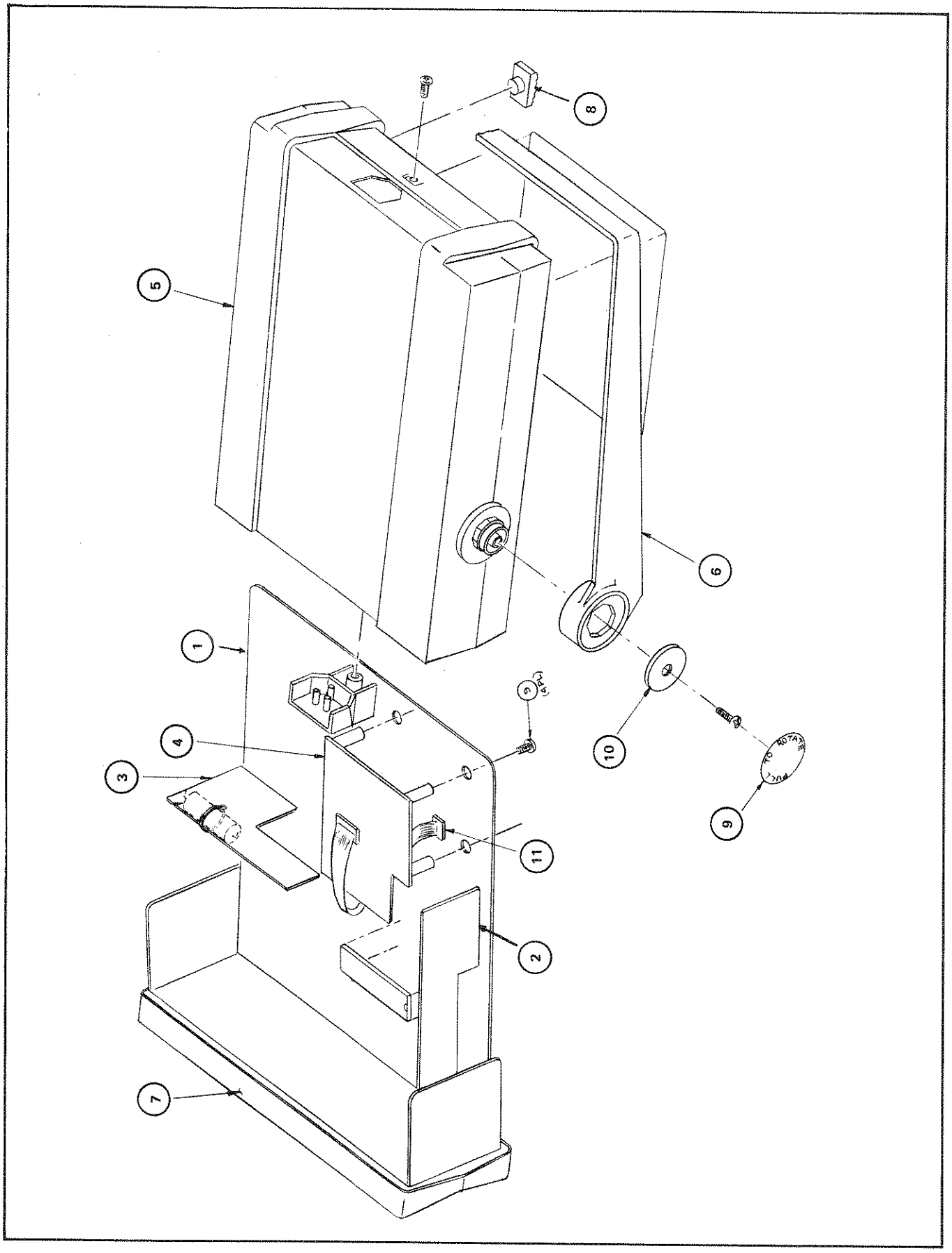

Figure 5-1. FINAL ASSEMBLY

Table 5-2 MAIN PCB ASSEMBLY, LINE

REF DESIG OR ITEM NO.	DESCRIPTION	FLUKE STOCK NO.	MFG FED SPLY CDE	MFG PART. NO. OR TYPE	TOT QTY	REC QTY	USE CDE
	MAIN PCB ASSEMBLY, LINE Figure 5-2						
C1, C2, C4, C7, C12, C17	Cap, cer, 0.01 μF -20/+80%, 25V	335786	72982	5835-000-Y5U-103Z	6		
C3	Cap, cer, 0.1 μF ± GMV, 25V	369199	71590	UK-25-104	1		
C8, 18, 21	Cap, cer, 0.001 μF ±10%, 500V	357806	56289	C106B102G102K	3		
C9	Cap, cer, 47 pF ±20%, 1000V	369132	56289	C030B102H470J	1		
C10	Cap, cer, 22 pF ±20%, 500V	369157	72982	831-000-C0G0-220	1		
C11	Cap, var, 2 - 22 pF, 100V	369207	73445	C010KA/20E	1		
C13	Cap, Cer, 10 pF ±10%, 3 kV	105536	56289	40C362A1	1		
C14	Cap, elect, 470 μF -10/+50%, 40V	185868	73445	ET471X040A02	1	1	
C15	Cap, elect, 5000 μF -10/+100%, 10V	340893	99372	39C10HJ53	1	1	
C16	Cap, elect, 470 μF -10/+50%, 25V	168153	73445	ET471X025A01	1	1	
C19	Cap, cer, 100 pF ±10%, 1 kV	105593	71590	DD-101	1		
CR1, CR2, CR10, CR11	Diode, Hi-speed switching	203323	07910	1N4448	4	1	
CR3	Diode, zener	203547	07910	1N759A	1	1	
CR6, CR7, CR12	Diode, Si, Rect.	343491	04713	1N4002	3	1	
Q1 thru Q7	Xstr, Si, PNP	352369	12040	2N4403	7	2	
Q8 thru Q13, Q15	Xstr, Si, NPN	218396	04713	2N3904	7	2	
Q14	Xstr, Si, NPN	381798	04713	MPSA-13	1	1	
Q16	Xstr FET N-channel	386094	01295	SX3819	1	1	
R1	Res, comp, 5.6k ±5%, 1/4W	148080	01121	CB5625	1		
R2, R4	Res, comp, 470k ±5%, 1/4W	188441	01121	CB4745	2		
R3	Res, comp, 680k ±5%, 1/4W	188433	01121	CB6845	1		
R5, R9	Res, comp, 470 ±5%, 1/4W	147983	01121	CB4715	2		
R6	Res, comp, 2.7k ±5%, 1/4W	170720	01121	CB2725	1		

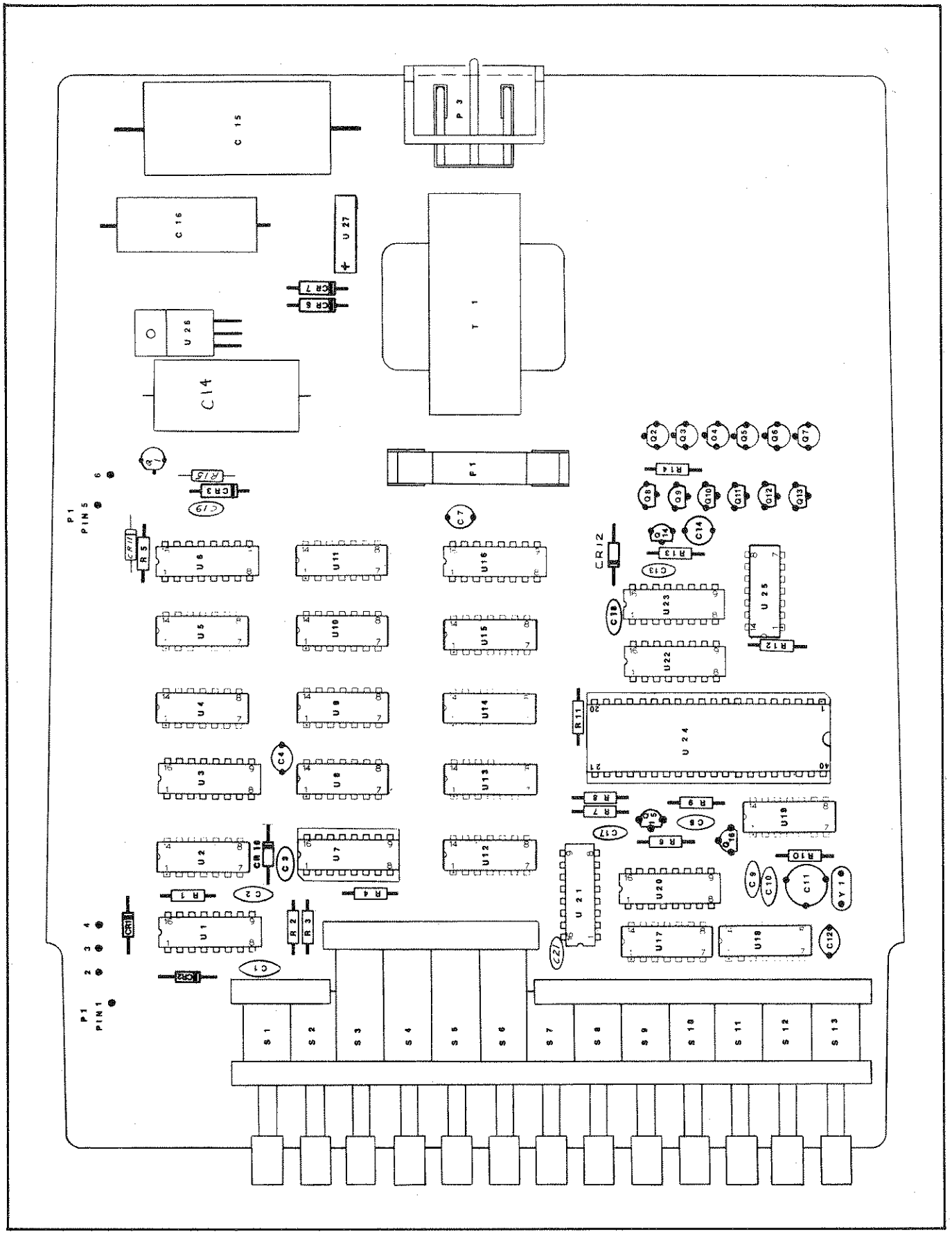

Figure 5-2. MAIN PCB ASSEMBLY — LINE CONFIGURATION

Table 5-2 MAIN PCB ASSEMBLY, LINE (cont.)

REF DESIG OR ITEM NO.	DESCRIPTION	FLUKE STOCK NO.	MFG FED SPLY CDE	MFG PART. NO. OR TYPE	TOT QTY	REC QTY	USE CDE
R7, R15	Res, comp, 10k ±5%, 1/4W	148106	01121	CB1035	2		
R8	Res, comp, 56 ±5%, 1/4W	147900	01121	CB5605	1		
R10	Res, comp, 1M ±5%, 1/4W	182204	01121	CB1055	1		
R11	Res, comp, 27k ±5%, 1/4W	148148	01121	CB2735	1		
R12	Res, comp, 10 ±5%, 1/4W	147868	01121	CB1005	1		
R13	Res, comp, 100k ±5%, 1/4W	148189	01121	CB1045	1		
R14	Res, comp, 120 ±5%, 1/4W	170712	01121	CB1215	1		
S1 thru S13	Switch Assembly	386078	89536	386078	1		
T1	Xfmr, 115/230	433102	89536	433102	1		
T1	Xfmr, 100V	433094	89536	433094	1		
U1, U6, U16	IC, Dig, C-MOS, hex buffer/inverter ⊗	381848	18725	CD4049AE	3	1	
U2, U12	IC, Dig, TTL, MSI decade counters	293159	01295	SN7490N	2	1	
U3	IC, TTL, BCD to decimal decoders	293142	01295	SN7442N	1	1	
U4, U13, U14	IC, C-MOS, dual, type "D" flip-flop ⊗	340117	04713	MC14013CP	3	1	
U5, U18	IC, Dig, C-MOS, quad, 2-input, NAND gates ⊗	355198	18725	CD4011CP	2	1	
U7	IC, MOS, counter, timer base circuit ⊗	381822	50088	MK5009P	1	1	
U8	IC, TTL, dual, d-type edge triggered flip-flops	310227	01295	SN7474N	1	1	
U9	IC, Dig, C-MOS, 4-input, POS NAND gates ⊗	355206	04713	MC14012CP	1	1	
U10, U15	IC, Dig, C-MOS, triple, 3-input, NAND gates ⊗	375147	18725	CD4023AE	2	1	
U11	IC, Dig, COS/MOS, quad, 2-input, NOR gates ⊗	355172	18725	CD4001AE	1	1	
U17	IC, Dig, TTL, quad, 2-input, pos, NAND gates	293068	01295	SN74H00N	1	1	
U19	IC, Dig, TTL, 30 MHz, presettable decade	393256	01295	SN74LS196N	1	1	
U20, U21	IC, TTL, dual, j-k edge triggered flip-flop	363440	01295	SN74S112N	2	1	
U22	IC, Dig, C-MOS, hex buffer/inverters ⊗	381830	18725	CD4050AE	1	1	
U23	IC, TTL, BCD-TO-SEVEN seg, decoder/driver (selected)	385872	01295	SN7447AN	1	1	

Table 5-2 MAIN PCB ASSEMBLY, LINE (cont.)

REF DESIG OR ITEM NO.	DESCRIPTION	FLUKE STOCK NO.	MFG FED SPLY CDE	MFG PART. NO. OR TYPE	TOT QTY	REC QTY	USE CDE
U24	IC, Dig, MOS, 7 digit 2.5 MHz decimal counter ⊗	380238	55261	1801A	1	1	
U25	Res, network	412866	89536	412866	1	1	
U26	IC, linear, POS VOL REG	381814	07623	78M05U0C	1	1	
U27	Rectifier Bridge	296509	51605	KBP-02	1	1	
Y1	Crystal Quartz	385732	11068	183025B	1		
F1	Fuse, fast acting 1/4 amp	109314	71400	AGC1-4	1		
	Contact, voltage	338657	89536	338657	2		
	Contact, earth common	448910	89536	448910	1		
	Insulator, contact	344184	89536	344184	1		
	Strap, rubber, mousetail	104794	98159	2829-115-3	1		
	Insulator, recptacle	338624	89536	338624	1		
	Connector Pin	376574	00779	3-87022-1	8		
	Socket, I.C. 16 pin	370312	91506	316-AG39D	1		
	Socket, I.C. 40 pin	386060	09922	DILB40P1	1		
	Fuse Clip	284984	84613	3621-2	1		
	Pushbutton, putty grey	369546	71590	J52305-T31753	12		
	Pushbutton, green	352211	71590	J52305-J71449	1		

Table 5-3 MAIN PCB ASSEMBLY, BATTERY

REF DESIG OR ITEM NO.	DESCRIPTION	FLUKE STOCK NO.	MFG FED SPLY CDE	MFG PART. NO. OR TYPE	TOT QTY	REC QTY	USE CDE
	MAIN PCB ASSEMBLY, BATTERY Figure 5-3	385021	89536	385021	REF		
BT1 thru BT4	Battery, Nicad, Rechargeable	346924	06001	41B004AD15	4		
C1, C2, C4, C7, C12, C17	Cap, cer, 10,000 pF -20/+80%, 25V	335786	72982	5835-000-Y5U-103Z	6		
C3	Cap, cer, 0.1 μF ± GMV, 50V	369199	71590	UK-25-104	1		
C5	Cap, ta, 22 μF ±20%, 25V	357780	56289	196D226X0025-PE4	1		
C8, C18, C21	Cap, cer, 100 pF ±10%, 500V	357806	56289	C106B102G102K	3		
C9	Cap, cer, 47 pF ±20%, 1000V	369132	56289	C030B102H470J	1		
C10	Cap, cer, 22 pF ±20%, 500V	369157	72982	831-000-C0G0-220	1		
C11	Cap, var, polyprop, 2-22	369207	73445	C010KA/20E	1	1	
C13	Cap, cer, 10 pF ±10%, 3 kV	105536	56289	40C362A1	1		
C19	Cap, cer, 100 pF ±10%, 1 kV	105593	71590	DD-101	1		
CR1, CR2, CR10, CR11	Diode, Hi-speed, switching	203323	07910	1N4448	4	1	
CR3	Diode, zener, uncomp	203547	07910	1N759A	1	1	
CR4, CR5, CR12	Diode, Si, Rect	343491	04713	1N4002	3	1	
Q1 thru Q7	Xstr, Si, PNP	352369	12040	2N4403	7	2	
Q8 thru Q13, Q15	Xstr, Si, NPN	218396	04713	2N3904	7	2	
Q14	Xstr, Si, NPN	381798	04713	MPSA-13	1	1	
Q16	Xstr, FED, N-channel, Junction	386094	01295	SX3819	1	1	
R1	Res, comp, 5.6k ±5%, 1/4W	148080	01121	CB5625	1		
R2, R4	Res, comp, 470k ±5%, 1/4W	188441	01121	CB4745	2		
R3	Res, comp, 680k ±5%, 1/4W	188433	01121	CB6845	1		
R5, R9	Res, comp, 470 ±5%, 1/4W	147983	01121	CB4715	2		
R6	Res, comp 2.7k ±5%, 1/4W	170720	01121	CB2725	1		

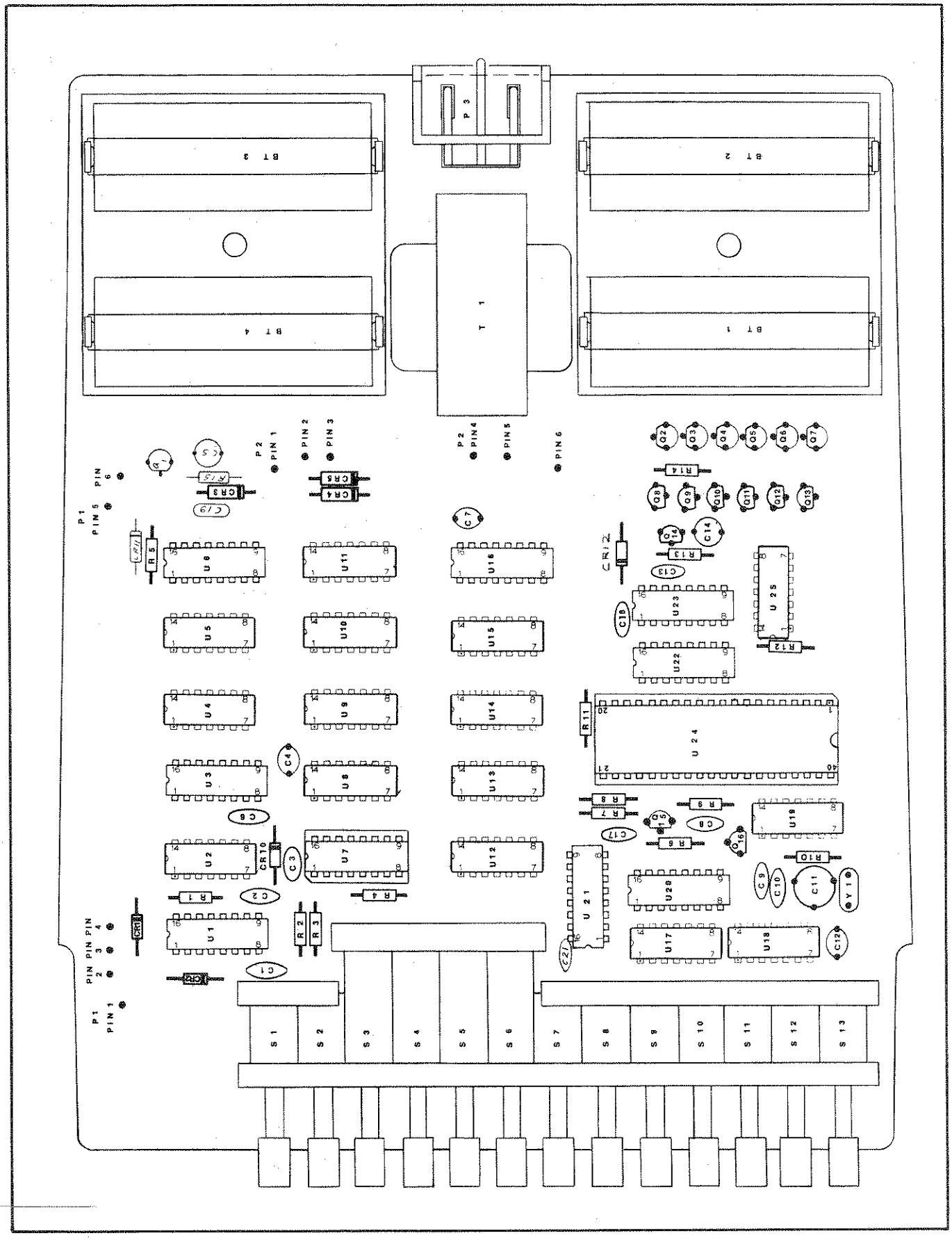

Figure 5-3. MAIN PCB ASSEMBLY – BATTERY (–01 OPTION) CONFIGURATION

Table 5-3 MAIN PCB, BATTERY (cont.)

REF DESIG OR ITEM NO.	DESCRIPTION	FLUKE STOCK NO.	MFG FED SPLY CDE	MFG PART. NO. OR TYPE	TOT QTY	REC QTY	USE CDE
R7, R15	Res, comp, 10k ±5%, 1/4W	148106	01121	CB1035	2		
R8	Res, comp, 56 ±5%, 1/4W	147900	01121	CB5605	1		
R10	Res, comp, 1M ±5%, 1/4W	182204	01121	CB1055	1		
R11	Res, comp, 27k ±5%, 1/4W	148148	01121	CB2735	1		
R12	Res, comp, 15 ±5%, 1/4W	147876	01121	CB1505	1		
R13	Res, comp, 100k ±5%, 1/4W	148189	01121	CB1045	1		
R14	Res, comp, 120 ±5%, 1/4W	170712	01121	CB1215	1		
S1 thru S13	Switch Assy	386078	89536	386078	1		
T1	Xfmr, battery	433110	89536	433110	1		
U1, 6, 16	IC, Dig, C-MOS, hex buffer/inverters ⊗	381848	18725	CD4049AE	3	1	
U2, 12	IC, Dig, TTL, MSI, decade counters	402545	01295	SN74LS90N	2	1	A
U3	IC, Dig, 4-line to 10 line decoder, BCD to decimal	408716	01295	SN74LS42N	1	1	A
U4, U13, U14	IC, C-MOS, dual, type "D" flip-flop ⊗	340117	04713	MC14013CP	3	1	
U5, U18	IC, Dig, C-MOS, quad, 2-input, NAND gates ⊗	355198	04713	MC14011CP	2	1	
U7	IC, MOS, counter, time base circuit ⊗	381822	50088	MK5009P	1	1	
U8	IC, Dig, TTL, dual D with clear and preset	393124	01295	SN74LS74N	1	1	A
U9	IC, Dig, C-MOS, dual 4-input, POS NAND gates ⊗	355206	04713	MC14012CP	1	1	
U10, U15	IC, Dig, C-MOS, triple 3-input NAND gates ⊗	375147	04713	MC14011CP	2	1	
U11	IC, Dig, COS/MOS, quad 2-input, NOR gates ⊗	355172	04713	MC14001CP	1	1	
U17	IC, Dig, TTL, quad, 2-input, POS NAND gates	393033	01295	SN74LS00N	1	1	A
U19	IC, Dig, TTL, 30 MHz prestbl decade or binary cntr/ltch	393256	01295	SN74LS196N	1	1	A
U20, U21	IC, TTL, dual J-K, edge triggered flip-flop	363440	01295	SN74LS112N	2	1	A
U22	IC, Dig, C-MOS, hex buffer, inverters ⊗	381830	18725	CD4050AE	1	1	
U23	IC, TTL, selected, BCD to 7-seg decoder/driver	385872	01295	SN7447AN	1	1	
U24	IC, Dig, MOS, 7 digit 2.5 MHz decimal counter ⊗	380238	55261	1801A	1	1	

Table 5-3 MAIN PCB, BATTERY (cont.)

REF DESIG OR ITEM NO.	DESCRIPTION	FLUKE STOCK NO.	MFG FED SPLY CDE	MFG PART. NO. OR TYPE	TOT QTY	REC QTY	USE CDE
U25	Res, network	417147	89536	417147	1	1	
Y1	Crystal, quartz	385732	11068	183025B	1		
	Battery Holder	390450	89536	390450	4		
	Battery Contact	344200	89536	344200	4		
	Conn, pin	376574	00779	3-87022-1	8		
	Contact, earth common	448910	89536	448910	1		
	Contact, voltage	338657	89536	338657	2		
	Insulator, recpt	338624	89536	338624	1		
	Pushbutton, puttygrey	369546	71590	J52305-T31753	12		
	Pushbutton, green	352211	71590	J52305-J71449	1		
	Socket, IC, 16-pin	370312	91506	316-AG39D	1		
	Socket, IC, 40-pin	386060	09922	DILB40P1	1		

Table 5-4 INPUT PCB ASSEMBLY

REF DESIG OR ITEM NO.	DESCRIPTION	FLUKE STOCK NO.	MFG FED SPLY CDE	MFG PART. NO. OR TYPE	TOT QTY	REC QTY	USE CDE
	INPUT PCB ASSEMBLY Figure 5-4	378406	89536	378406	REF		
	Input PCB 1900A-3003	378117	89536	378117			
C1	Cap, poly, est, 0.10 μF ±20%, 250V	441345	73445	C281A/A100K	1		
C2	Cap, cer, 100 pF ±10%, 1 kV	105593	71590	DD-101	1		
C3, C8 C13	Cap, cer, 0.01 μF +8-/-20%, 25V	335786	32897	5835-000Y5U-103Z	4		
C4, C5	Cap, Ta, 22 μF ±20%, 25V	357780	56289	196D226X0025-PE4	2		
C6	Cap, cer, 0.0012 μF ±10%, 500V	106732	71590	CF-102	1		
C7, C11, C12	Cap, Ta, 10 μF ±20%, 15V	193623	56289	196D106X0015-KA1	3		
C9	Cap, mini cer, 4.7 pF ± 0.25 pF, 100V	362772	72982	8101-A100-C0G-479G	1		
C10	Cap, cer, 47 pF ±20%, 1000V	369132	56289	C030B102H470J	1		
CR1, CR2, CR3, CR4	Diode, Ultra fast, lo cap, Si	381806	07263	1N3062	4	1	
CR5, CR6, CR7, CR8	Diode, switching, hi-speed	203323	07910	1N4448	4	1	
CR9	Diode, zener	386771	07263	1N756A	1		
Q1	Xstr, FED, N-channel	288324	12040	SF50070	1		
Q2, Q3, Q5, Q6, Q7	Xstr, PNP, high speed switch	369629	07263	2N5771	5		
Q4	Xstr, NPN, Si, lo P	369645	07263	2N4274	1		
R1, R24	Res, comp, 180 ±5%, 1/4W	147942	01121	CB1815	2		
R2	Res, comp, 120k ±5%, 1/4W	193458	01121	CB1245	2		
R3	Res, comp, 1M ±5%, 1/4W	182204	01121	CB1055	1		
R4, 5, 18, 19, 20, 22, 23, 26, 27	Res, comp 560 ±5%, 1/4W	147991	01121	CB5615	9		
R6, R11	Res, comp 1k ±5%, 1/4W	148023	01121	CB1025	2		
R7	Res, comp, 100 ±5%, 1/4W	147926	01121	CB1015	1		

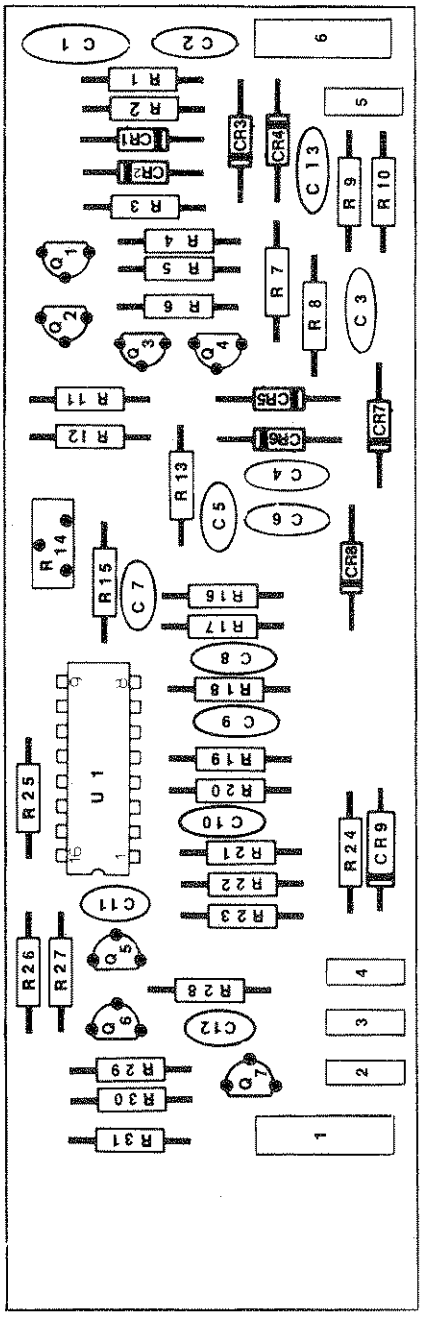

Figure 5-4. INPUT PCB ASSEMBLY

Table 5-4 INPUT PCB ASSEMBLY (cont.)

REF DESIG OR ITEM NO.	DESCRIPTION	FLUKE STOCK NO.	MFG FED SPLY CDE	MFG PART. NO. OR TYPE	TOT QTY	REC QTY	USE CDE
R8	Res, comp, 10k ±5%, 1/4W	148106	01121	CB1035	1		
R9, R16, R17, R29	Res, comp, 3.3k ±5%, 1/4W	148056	01121	CB3325	4		
R10	Res, comp, 330 ±5%, 1/4W	147967	01121	CB3315	1		
R12	Res, comp, 10 ±5%, 1/4W	147868	01121	CB1005	1		
R13	Res, comp, 82 ±5 %, 1/4W	149484	01121	CB8205	1		
R14	Res, trimpot, 10k ±20%	385393	54869	PT10H(2.5)10K	1	1	
R15	Res, comp, 47k ±5%, 1/4W	148163	01121	CB4735	1		
R21	Res, comp, 680 ±5%, 1/4W	148007	01121	CB6815	1		
R25	Res, comp, 270 ±5%, 1/4W	160804	01121	CB2715	1		
R28	Res, comp, 33 ±5%, 1/4W	175034	01121	CB3305	1		
R30	Res, comp, 150 ±5%, 1/4W	147934	01121	CB1515	1		
R31	Res, comp, 220 ±5%, 1/4W	147959	01121	CB2215	1		
U1	IC, ECL, tripple line recv, OR/NOR	369702	04713	MC10116L	1		
	Connector, test jack	149112	74970	105-0753	2		
	Amp connector	375329	00779	85863-3	4		

Table 5-5 DISPLAY PCB ASSEMBLY

REF DESIG OR ITEM NO.	DESCRIPTION	FLUKE STOCK NO.	MFG FED SPLY CDE	MFG PART. NO. OR TYPE	TOT QTY	REC QTY	USE CDE
	DISPLAY PCB ASSEMBLY						
	Figure 5-5	378387	89536	378398	REF		
DS201, 202, 203	Diode Light Emitting	385898	28480	5082-4487	3		
U201, 202, 203, 204, 205, 206	Led, display	429985	50579	DL-707-811	6		

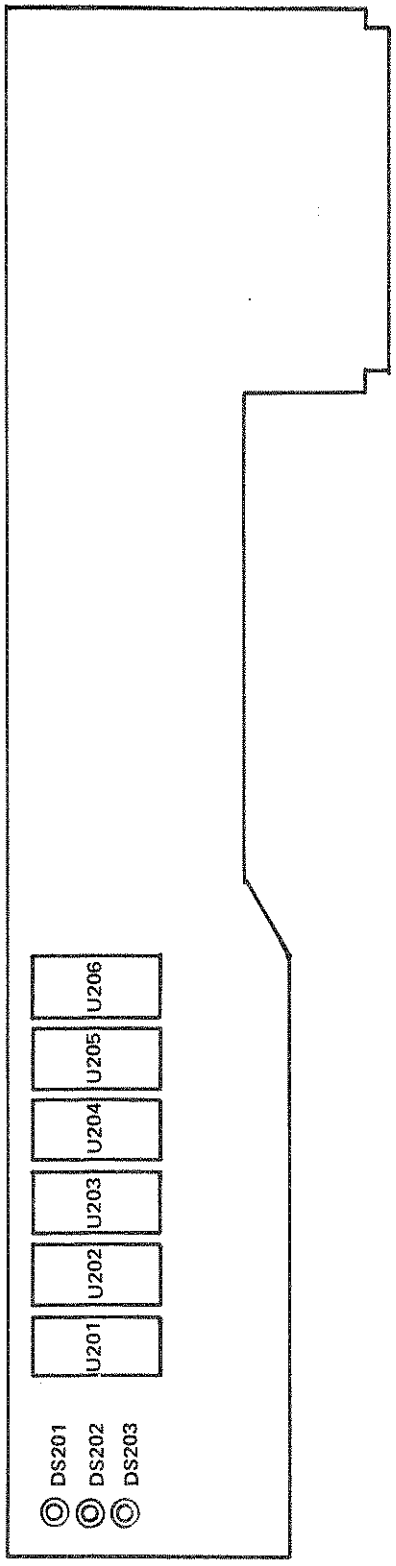

Figure 5-5. DISPLAY PCB ASSEMBLY

Table 5-6 INVERTER PCB ASSEMBLY

REF DESIG OR ITEM NO.	DESCRIPTION	FLUKE STOCK NO.	MFG FED SPLY CDE	MFG PART. NO. OR TYPE	TOT QTY	REC QTY	USE CDE
	INVERTER PCB ASSEMBLY Figure 5-6	388447	89536	388447	REF		
C401	Cap, mylar, 5 μF, ±5%, 200V [1]	106997	06739	D2-505D	1		
	Cap, mylar, 8 μF, ±5%, 200V [2]	380261	89536	380261	1		
	Cap, met, poly prpln, 2.8 μF, ±5%, 300V [3]	394197	89536	394197	1		
C402	Cap, fxd cer, 47 pF ±20%, 100V	369132	56289	C030B102H4705	1		
C403	Cap, Ta, 10 μF ±20%, 15V	193623	56289	196D106X0015-JA1	1		
C404	Cap, fxd cer, 0.1 μF, 25V	369199	71590	UK-25-104	1		
C405	Cap, elect, 10,000 μF, -10/+100%, 6V	387241	99392	39CS6J14	1		
CR401, 402	Diode, Hi-speed switching	203323	07910	1N4448	2	1	
CR403, 404	Diode, zener	291575	12969	UZ8720	2	1	
F1	Fuse, 1/2 amp, 250V	109322	71400	MDL	1	5	
L1	Coil	320911	89536	320911	1		
Q401, 402	Xstr, Si, NPN	218396	04713	2N3904	2	1	
R401	Res, comp, 1M ±5%, 1/4W	182204	01121	CB1055	1		
R402	Res, comp, 22 ±5%, 1/4W	147884	01121	CB2205	1		
R403	Res, comp, 330 ±5%, 1/4W	147967	01121	CB3315	1		
R404	Res, comp, 82 ±5%, 1/4W	149484	01121	CB8205	1		
T2	Xfmr	417048	89536	417048	1		

[1] For 115V, 60 Hz versions

[2] For 100V, 50 Hz versions

[3] For 230V, 50 Hz versions

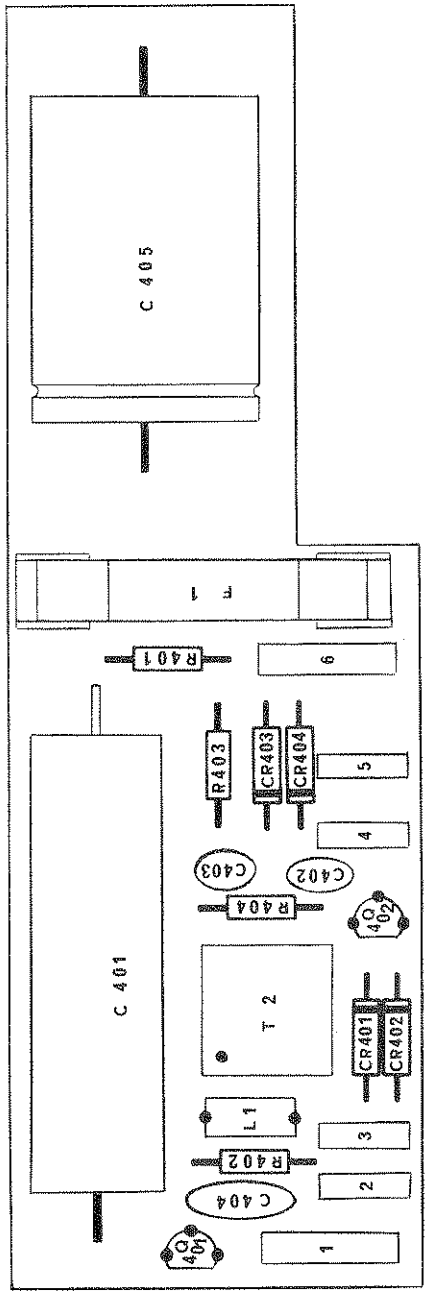

Figure 5-6. INVERTER PCB ASSEMBLY

Table 5-7 D.O.U. PCB ASSEMBLY

REF DESIG OR ITEM NO.	DESCRIPTION	FLUKE STOCK NO.	MFG FED SPLY CDE	MFG PART. NO. OR TYPE	TOT QTY	REC QTY	USE CDE
	DOU PCB ASSEMBLY Figure 5-7						
C1	Cap, Ta, 22 μF ±20%, 25V	357780	56289	196D226X0025-PE4	1	1	
C2	Cap, cer, 68 pF ±10%, 1 kV	106153	71590	DD680	1		
C3	Cap, cer 0.1 μF ± GMV, 25V	369199	71590	UK-25-104	1		
R1	Res, comp, 47k ±5%, 1/4W	148163	01121	CB4735	1		
R2	Res, comp, 100k ±5%, 1/4W	148189	01121	CB1045	1		
U1, U3, U4	IC, C-MOS, NAND gates	355198	04713	MC14011CP	3		
U2	IC, C-MOS, dual multivibrator	393512	04713	MC14528CD	1		
U5, U7 thru U12	IC, C-MOS, quad clocked d latch	355149	18725	CD4042AE	7		
U6	IC, C-MOS, bcd-to-decimal decoder	380741	18725	CD4028AE	1		
	Spacer, hex	394528	89536	394528	4		
	Flat Cable Assy	393520	52072	CAD16P-02-261-TT-006	1		

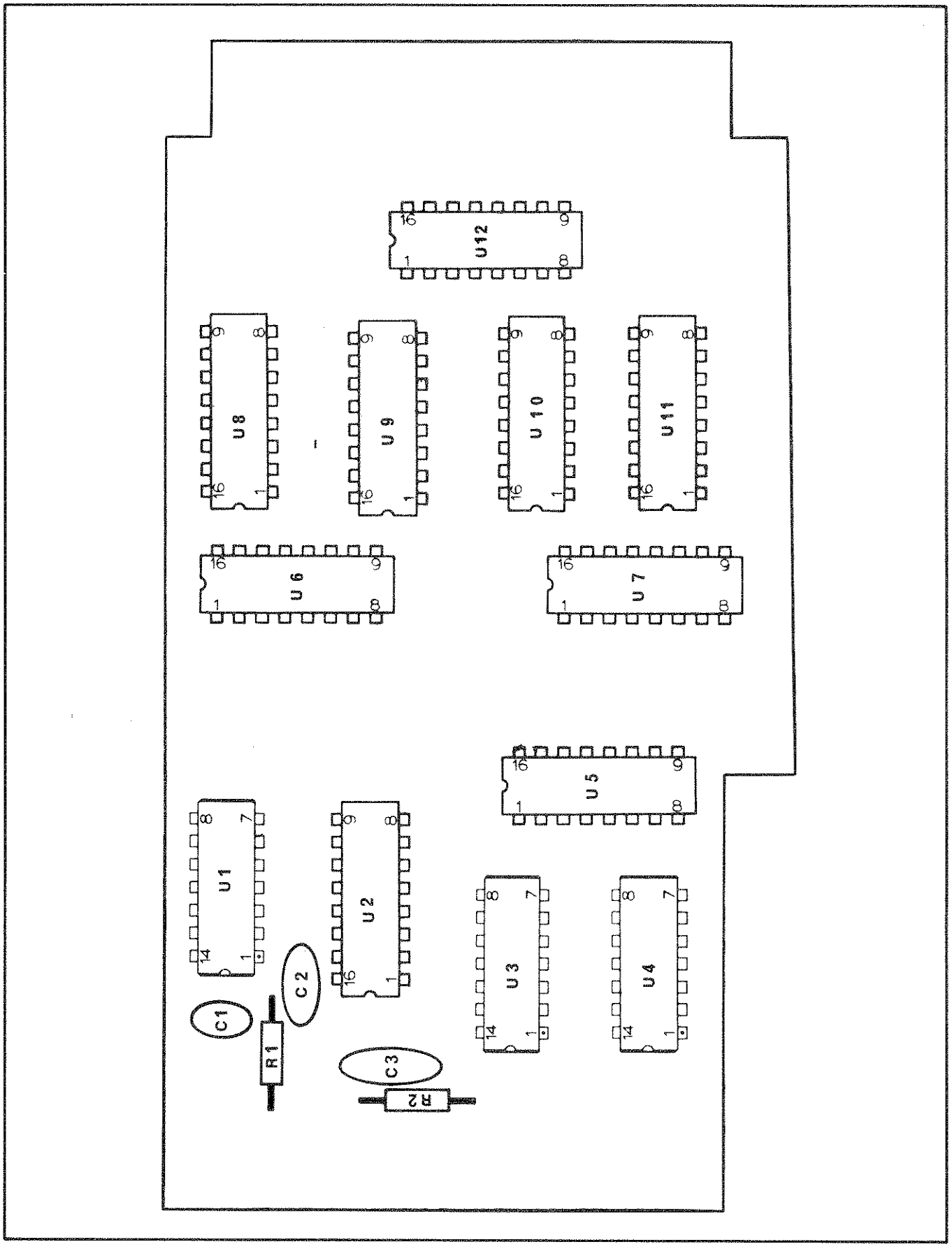

Figure 5-7. D.O.U. PCB ASSEMBLY

Section 6

Option & Accessory Information

6-1. INTRODUCTION

6-2. This section of the manual contains information pertaining to the options and accessories available for your instrument. Each option and accessory is described under a separate major heading containing the model or option number. The option descriptions contain applicable operating and maintenance instructions, and field installation procedures. A list of replaceable parts and the schematics are located in Sections 5 and 8 respectively.

6-3. BATTERY PACK, OPTION –01

WARNING

Damage may result if alkaline, zinc-carbon, or mercury batteries are charged in the 1900A.

6-4. Power for the Model 1900A-01 is supplied by internal rechargeable batteries that allow the instrument to operate for at least four hours. The batteries should be recharged after every four hours of operation or when the input sensitivity falls below specifications. Recharging is most rapidly accomplished by switching the 1900A power switch to the OFF position and connecting the instrument to ac line power. In this way, the discharged batteries can be completely recharged in approximately 12 to 14 hours. The instrument can also be operated when recharging the batteries, but the recharging time will be extended to approximately 56 hours. Batteries should be recharged within the temperature limits of 15°C to 23°C. Exceeding these limits will reduce storage capacity and may reduce battery life.

NOTE

Battery manufacturers recommend that nickel cadmium batteries not be stored for extended periods of time without recharging at least every 90 days. Storage temperature below 25°C are recommended.

6-5. Battery Replacement

6-6. The procedure described below provides step-by-step instructions for replacing the batteries in the Model 1900A-01.

CAUTION

Do not remove the batteries before disconnecting the instrument from input line power.

a. Disconnect line power cord. Remove retainer screw from rear of instrument case, and remove instrument from case.

b. On the underside of PCB, remove two threaded bolts securing battery holders in place.

c. Remove holder tops and batteries.

d. Replace batteries with 1.2 volt nickel-cadmium batteries (JF part no. 346924). Install the batteries adhering to polarity indications on battery holder.

NOTE

Use 1.2 volt nickel-cadmium batteries only.

6-7. Battery Powered Instrument Repair Techniques

6-8. In battery-powered instruments, one of the batteries should be removed before attempting any repairs. This is necessary to eliminate the danger of shorting portions of the circuitry which carry the battery voltage. Remove the batteries as described under Battery Replacement.

6-9. DATA OUTPUT UNIT, OPTION –02

6-10. Introduction

6-11. The Fluke Model 1900A counter, when equipped with a Data Output Unit is compatible with data logging systems which accept parallel bits of information in binary coded decimal (1, 2, 4, 8) format. The data available from the counter contains digit, overflow, decimal point, units, and print command information. The drive capability of all data outputs in CMOS compatible; able to sink .16mA at logic 0 or source .16mA for logic 1 levels.

6-12. Operation

6-13. OUTPUT DATA

6-14. The output data available at the rear-panel D.O.U. connector is listed in Table 6-1. The pin functions and decimal point code are provided.

6-15. D.O.U. 44 PIN CONNECTOR KIT

6-16. A 50 pin connector kit is provided to allow custom fabrication of an interface cable. The kit (JF part no. 410241) consists of the following items:

ITEM	DESCRIPTION	QUANTITY	FLUKE P/N
1	Connector, 50 pin	1	407320
2	Connector Backshell	2	398008
3	AMP pins	38	394569
4	Polarizing Key	1	386169
5	Form	1	433425

The interconnecting cable (telephone type D-50) and the termination connector for making the custom interface cable are customer supplied. The 50-conductor, telephone type D-50 cable (Fluke P/N 320317) can be ordered from the John Fluke Mfg. Co.; when doing so indicate how many feet are required.

Table 6-1. DATA OUTPUT UNIT (D.O.U.) CONNECTIONS

PIN NO.	FUNCTION	PIN NO.	FUNCTION
1	–	A	Ground
2	Print Command	B	–
3	–	C	–
4	–	D	–
5	–	E	–
6	Overflow	F	Decimal Point (L)
7	Decimal Point (M)	H	Decimal Point (N)
8	LSD – BCD 8	J	LSD – BCD 4
9	LSD – BCD 2	K	LSD – BCD 1
10	5SD – BCD 8	L	5SD – BCD 4
11	5SD – BCD 2	M	5SD – BCD 1
12	4SD – BCD 8	N	5SD – BCD 4
13	4SD – BCD 2	P	4SD – BCD 1
14	3SD – BCD 8	R	3SD – BCD 4
15	3SD – BCD 2	S	3SD – BCD 1
16	2SD – BCD 8	T	2SD – BCD 4
17	2SD – BCD 2	U	2SD – BCD 1
18	MSD – BCD 8	V	MSD – BCD 4
19	MSD – BCD 2	W	MSD – BCD 1
20	MHz	X	μS
21	kHz	Y	mS
22	Hz	Z	Dimensionless *

*Goes high in TOTALIZE function.

DECIMAL POINT POSITION CODING

(L) Pin F	(M) Pin 7	(N) Pin H	DECIMAL POINT POSITION
0	0	0	XX.XXXX
1	0	0	XXX.XXX
1	0	1	XXXX.XX
0	0	0	– – –

6-17. Theory of Operation

6-18. The D.O.U. consists of a series of latches which, when enabled, store the digit, decimal, and unit information. The stored data is updated at each 1900A gate time. The memory update command (MUP), used to update the data stored in the latches in U24, also generates the trigger at pin 2 of the DOU connector. The trigger (1ms positive pulse) indicates that new data is being loaded; the D.O.U. output data should be ignored during this time.

6-19. The display data is applied to the D.O.U. in bcd format (1, 2, 4, 8) on J3 pins 1, 16, 10 and 9 respectively (see Data Output Unit Schematic, Section 8). The bcd equivalent of each digit of the display, least significant (LSD) through the most significant (MSD), is strobed on to the four lines for 90 ms each. The strobe signal that applies each significant digit to the four data lines also enables a latch in the D.O.U. which corresponds to the significant digit information on the four data lines. The decimal point code (L, M, N) is produced by nand gates using the decimal strobe (DS) along with digit strobe AS2, AS3, or AS4.

Section 7

General Information

7-1. This section of the manual contains generalized user information as well as supplemental information to the List of Replaceable Parts contained in Section 5.

List of Abbreviations and Symbols

A or amp	ampere
ac	alternating current
af	audio frequency
a/d	analog-to-digital
assy	assembly
AWG	american wire gauge
B	bel
bcd	binary coded decimal
°C	Celsius
cap	capacitor
ccw	counterclockwise
cer	ceramic
cermet	ceramic to metal(seal)
ckt	circuit
cm	centimeter
cmrr	common mode rejection ratio
comp	composition
cont	continue
crt	cathode-ray tube
cw	clockwise
d/a	digital-to-analog
dac	digital-to-analog converter
dB	decibel
dc	direct current
dmm	digital multimeter
dvm	digital voltmeter
elect	electrolytic
ext	external
F	farad
°F	Fahrenheit
FET	Field-effect transistor
ff	flip-flop
freq	frequency
FSN	federal stock number
g	gram
G	giga (10^9)
gd	guard
Ge	germanium
GHz	gigahertz
gmv	guaranteed minimum value
gnd	ground
H	henry
hd	heavy duty
hf	high frequency
Hz	hertz
IC	integrated circuit
if	intermediate frequency
in	inch(es)
intl	internal
I/O	input/output
k	kilo (10^3)
kHz	kilohertz
kΩ	kilohm(s)
kV	kilovolt(s)
lf	low frequency
LED	light-emitting diode
LSB	least significant bit
LSD	least significant digit
M	mega (10^6)
m	milli (10^{-3})
mA	milliampere(s)
max	maximum
mf	metal film
MHz	megahertz
min	minimum
mm	millimeter
ms	millisecond
MSB	most significant bit
MSD	most significant digit
MTBF	mean time between failures
MTTR	mean time to repair
mV	millivolt(s)
mv	multivibrator
MΩ	megohm(s)
n	nano (10^{-9})
na	not applicable
NC	normally closed
(-) or neg	negative
NO	normally open
ns	nanosecond
opnl ampl	operational amplifier
p	pico (10^{-12})
para	paragraph
pcb	printed circuit board
pF	picofarad
pn	part number
(+) or pos	positive
pot	potentiometer
p-p	peak-to-peak
ppm	parts per million
PROM	programmablle read-only memory
psi	pound-force per square inch
RAM	random-access memory
rf	radio frequency
rms	root mean square
ROM	read-only memory
s or sec	second (time)
scope	oscilloscope
SH	shield
Si	silicon
serno	serial number
sr	shift register
Ta	tantalum
tb	terminal board
tc	temperature coefficient or temperature compensating
tcxo	temperature compensated crystal oscillator
tp	test point
u or μ	micro (10^{-6})
uhf	ultra high frequency
us or μs	microsecond(s) (10^{-6})
uut	unit under test
V	volt
v	voltage
var	variable
vco	voltage controlled oscillator
vhf	very high frequency
vlf	very low frequency
W	watt(s)
ww	wire wound
xfmr	transformer
xstr	transistor
xtal	crystal
xtlo	crystal oscillator
Ω	ohm(s)
μ	micro (10^{-6})

Federal Supply Codes for Manufacturers

00213
Nytronics Comp. Group Inc.
Subsidiary of Nytronics Inc.
Formerly Sage Electronics
Rochester, New York

00327
Welwyn International, Inc.
Westlake, Ohio

00656
Aerovox Corp.
New Bedford, Massachusetts

00686
Film Capacitors, Inc.
Passaic, New Jersey

00779
AMP Inc.
Harrisburg, Pennsylvania

01121
Allen-Bradley Co.
Milwaukee, Wisconsin

01281
TRW Electronic Comp.
Semiconductor Operations
Lawndale, California

01295
Texas Instruments, Inc.
Semiconductor Group
Dallas, Texas

01537
Motorola Communications &
Electronics Inc.
Franklin Park, Illinois

01686
RCL Electronics Inc.
Manchester, New Hampshire

01730
Replaced by 73586

01884
Use 56289
Sprague Electric Co.
Dearborn Electronic Div.
Lockwood, Florida

02114
Ferroxcube Corp.
Saugerties, New York

02131
General Instrument Corp.
Harris ASW Div.
Westwood, Maine

02395
Rason Mfg. Co.
Brooklyn, New York

02533
Snelgrove, C.R. Co., Ltd.
Don Mills, Ontario, Canada
M3B 1M2

02606
Fenwal Labs
Div. of Travenal Labs.
Morton Grove, Illinois

02660
Bunker Ramo Corp., Conn Div.
Formerly Amphenol-Borg
Electric Corp.
Broadview, Illinois

02799
Areo Capacitors, Inc.
Chatsworth, California

03508
General Electric Co.
Semiconductor Products
Syracuse, New York

03614
Replaced by 71400

03651
Replaced by 44655

03797
Eldema Div.
Genisco Technology Corp.
Compton, California

03877
Transistron Electronic Corp.
Wakefield, Massachusetts

03888
KDI Pyrofilm Corp.
Whippany, New Jersey

03911
Clairex Electronics Div.
Clairex Corp.
Mt. Vernon, New York

03980
Muirhead Inc.
Mountainside, New Jersey

04009
Arrow Hart Inc.
Hartford, Connecticut

04062
Replaced by 72136

04202
Replaced by 81312

04217
Essex International Inc.
Wire & Cable Div.
Anaheim, California

04221
Aemco, Div. of
Midtex Inc.
Mankato, Minnesota

04222
AVX Ceramics Div.
AVX Corp.
Myrtle Beach, Florida

04423
Telonic Industries
Laguna Beach, California

04645
Replaced by 75376

04713
Motorola Inc. Semiconductor
Products
Phoenix, Arizona

04946
Standard Wire & Cable
Los Angeles, California

05082
Replaced by 94988

05236
Jonathan Mfg. Co.
Fullerton, California

05245
Components Corp. now
Corcom, Inc.
Chicago, Illinois

05277
Westinghouse Electric Corp.
Semiconductor Div.
Youngwood, Pennsylvania

05278
Replaced by 43543

05279
Southwest Machine &
Plastic Co.
Glendora, California

05397
Union Carbide Corp.
Materials Systems Div.
New York, New York

05571
Use 56289
Sprague Electric Co.
Pacific Div.
Los Angeles, California

05574
Viking Industries
Chatsworth, California

05704
Replaced by 16258

05820
Wakefield Engineering Inc.
Wakefield, Massachusetts

06001
General Electric Co.
Electronic Capacitor &
Battery Products Dept.
Columbia, South Carolina

06136
Replaced by 63743

06383
Panduit Corp.
Tinley Park, Illinois

06473
Bunker Ramo Corp.
Amphenol SAMS Div.
Chatsworth, California

06555
Beede Electrical Instrument Co.
Penacook, New Hampshire

06739
Electron Corp.
Littleton, Colorado

06743
Clevite Corp.
Cleveland, Ohio

06751
Components, Inc. Semcor Div.
Phoenix, Arizona

06860
Gould Automotive Div.
City of Industry, California

06961
Vernitron Corp., Piezo
Electric Div.
Formerly Clevite Corp., Piezo
Electric Div.
Bedford, Ohio

06980
Eimac Div.
Varian Associates
San Carlos, California

07047
The Ross Milton Co.
South Hampton, Pennsylvania

07115
Replaced by 14674

07138
Westinghouse Electric Corp.,
Electronic Tube Div.
Horsehead, New York

07233
TRW Electronic Components
Cinch Graphic
City of Industry, California

07256
Silicon Transistor Corp.
Div. of BBF Group Inc.
Chelmsford, Massachusetts

07261
Aumet Corp.
Culver City, California

07263
Fairchild Semiconductor
Div. of Fairchild Camera
& Instrument Corp.
Mountain View, California

07344
Bircher Co., Inc.
Rochester, New York

07597
Burndy Corp.
Tape/Cable Div.
Rochester, New York

07792
Lerma Engineering Corp.
Northampton, Massachusetts

07910
Teledyne Semiconductor
Formerly Continental Device
Hawthorne, California

07933
Use 49956
Raytheon Co.
Semiconductor Div. HQ
Mountain View, California

08225
Industro Transistor Corp.
Long Island City, New York

08261
Spectra Strip Corp.
Garden Grove, California

08530
Reliance Mica Corp.
Brooklyn, New York

08806
General Electric Co.
Miniature Lamp Products Dept
Cleveland, Ohio

08863
Nylomatic Corp.
Norrisville, Pennsylvania

08988
Use 53085
Skottie Electronics Inc.
Archbald, Pennsylvania

09214
G.E. Co. Semi-Conductor
Products Dept.
Power Semi-Conductor
Products OPN Sec.
Auburn, New York

09353
C and K Components
Watertown, Massachusetts

09423
Scientific Components, Inc.
Santa Barbara, California

09922
Burndy Corp.
Norwalk, Connecticut

09969
Dale Electronics Inc.
Yankton, S. Dakota

10059
Barker Engineering Corp.
Formerly Amerace, Amerace
ESNA Corp.
Kenilworth, New Jersey

11236
CTS of Berne
Berne, Indiana

11237
CTS Keene Inc.
Paso Robles, California

11358
CBS Electronic Div.
Columbia Broadcasting System
Newburyport, Minnesota

11403
Best Products Co.
Chicago, Illinois

11503
Keystone Columbia Inc.
Warren, Michigan

11532
Teledyne Relays
Hawthorne, California

11711
General Instrument Corp.
Rectifier Division
Hicksville, New York

11726
Qualidyne Corp.
Santa Clara, California

12014
Chicago Rivet & Machine Co.
Bellwood, Illinois

12040
National Semiconductor Corp.
Danburry, Connecticut

12060
Diodes, Inc.
Chatsworth, California

12136
Philadelphia Handle Co.
Camden, New Jersey

12300
Potter-Brumfield Div.
AMF Canada LTD.
Guelph, Ontario, Canada

12323
Presin Co., Inc.
Shelton, Connecticut

12327
Freeway Corp. formerly
Freeway Washer & Stamping Co.
Cleveland, Ohio

12443
The Budd Co. Polychem Products
Plastic Products Div.
Bridgeport, Pennsylvania

12615
U.S. Terminals Inc.
Cincinnati, Ohio

12617
Hamlin Inc.
Lake Mills, Wisconsin

12697
Clarostat Mfg. Co.
Dover, New Hampshire

12749
James Electronics
Chicago, Illinois

12856
Micrometals
Sierra Madre, California

12954
Dickson Electronics Corp.
Scottsdale, Arizona

12969
Unitrode Corp.
Watertown, Massachusetts

13103
Thermalloy Co., Inc.
Dallas, Texas

13327
Solitron Devices Inc.
Tappan, New York

13511
Amphenol Cadre Div.
Bunker-Ramo Corp.
Los Gatos, California

13606
Use 56289
Sprague Electric Co.
Transistor Div.
Concord, New Hampshire

13839
Replaced by 23732

14099
Semtech Corp.
Newbury Park, California

14140
Edison Electronic Div.
Mc Gray-Edison Co.
Manchester, New Hampshire

14193
Cal-R-Inc. formerly
California Resistor, Corp.
Santa Monica, California

14298
American Components, Inc.
an Insilco Co.
Conshohocken, Pennsylvania

14655
Cornell-Dublier Electronics
Division of Federal Pacific
Electric Co. Govt. Control Dept.
Newark, New Jersey

14752
Electro Cube Inc.
San Gabriel, California

14869
Replaced by 96853

14936
General Instrument Corp.
Semi Conductor Products Group
Hicksville, New York

15636
Elec-Trol Inc.
Saugus, California

15801
Fenwal Electronics Inc.
Div. of Kidde Walter and Co., Inc.
Framingham, Massachusetts

15818
Teledyne Semiconductors,
formerly Amelco Semiconductor
Mountain View, California

15849
Litton Systems Inc. Useco Div.
formerly Useco Inc.
Van Nuys, California

15898
International Business
Machines Corp.
Essex Junction, Vermont

15909
Replaced by 14140

16258
Space-Lok Inc.
Burbank, California

16299
Corning Glass
Electronic Components Div.
Raleigh, North Carolina

16332
Replaced by 28478

16473
Cambridge Scientific Ind.
Div. of Chemed Corporation
Cambridge, Maryland

16742
Paramount Plastics
Fabricators, Inc.
Downey, California

16758
Delco Electronics
Div. of General Motors Corp.
Kokomo, Indiana

17001
Replaced by 71468

17069
Circuit Structures Lab.
Burbank, California

17338
High Pressure Eng. Co., Inc.
Oklahoma City, Oklahoma

17545
Atlantic Semiconductors, Inc.
Asbury Park, New Jersey

17856
Siliconix, Inc.
Santa Clara, California

17870
Replaced by 14140

18178
Vactec Inc.
Maryland Heights, Missouri

18324
Signetics Corp.
Sunnyvale, California

18612
Vishay Resistor Products Div.
Vishay Intertechnology Inc.
Malvern, Pennsylvania

18736
Voltronics Corp.
Hanover, New Jersey

18927
GTE Sylvania Inc.
Precision Material Group
Parts Division
Titusville, Pennsylvania

19451
Perine Machinery & Supply Co.
Seattle, Washington

19701
Electro-Midland Corp.
Mepco-Electra Inc.
Mineral Wells, Texas

20584
Enochs Mfg. Inc.
Indianapolis, Indiana

Federal Supply Codes for Manufacturers (cont)

20891
Self-Organizing Systems, Inc.
Dallas, Texas

21604
Bucheye Stamping Co.
Columbus, Ohio

21845
Solitron Devices Inc.
Transistor Division
Riveria Beach, Florida

22767
ITT Semiconductors
Palo Alto, California

23050
Product Comp. Corp.
Mount Vernon, New York

23732
Tracor Inc.
Rockville, Maryland

23880
Stanford Applied Engrng.
Santa Clara, California

23936
Pamotor Div., Wm. J. Purdy Co.
Burlingame, California

24248
Replaced by 94222

24355
Analog Devices Inc.
Norwood, Massachusetts

24655
General Radio
Concord, Massachusetts

24759
Lenox-Fugle Electronics Inc.
South Plainfield, New Jersey

25088
Siemen Corp.
Isilen, New Jersey

25403
Amperex Electronic Corp.
Semiconductor &
Micro-Circuits Div.
Slatersville, Rhode Island

27014
National Semiconductor Corp.
Santa Clara, California

27264
Molex Products
Downers Grove, Illinois

28213
Minnesota Mining & Mfg. Co.
Consumer Products Div.
St. Paul, Minnesota

28425
Serv-/-Link formerly
Bohannan Industries
Fort Worth, Texas

28478
Deltrol Controls Div.
Deltrol Corporation
Milwaukee, Wisconsin

28480
Hewlett Packard Co.
Corporate HQ
Palo Alto, California

28520
Heyman Mfg. Co.
Kenilworth, New Jersey

29083
Monsanto, Co., Inc.
Santa Clara, California

29604
Stackpole Components Co.
Raleigh, North Carolina

30148
AB Enterprise Inc.
Ahoskie, North Carolina

30323
Illinois Tool Works, Inc.
Chicago, Illinois

31091
Optimax Inc.
Colmar, Pennsylvania

32539
Mura Corp.
Great Neck, New York

32767
Griffith Plastic Corp.
Burlingame, California

32879
Advanced Mechanical
Components
Northridge, California

32897
Erie Technological Products, Inc.
Frequency Control Div.
Carlisle, Pennsylvania

32997
Bourns Inc.
Trimpot Products Division
Riverside, California

33173
General Electric Co.
Products Dept.
Owensboro, Kentucky

34333
Silicon General
Westminister, California

34335
Advanced Micro Devices
Sunnyvale, California

34802
Electromotive Inc.
Kenilworth, New Jersey

37942
P.R. Mallory & Co., Inc.
Indianapolis, Indiana

42498
National Radio
Melrose, Massachusetts

43543
Nytronics Inc.
Transformer Co. Div.
Geneva, New York

44655
Ohmite Mfg. Co.
Skokie, Illinois

49671
RCA Corp.
New York, New York

49956
Raytheon Company
Lexington, Massachusetts

50088
Mostek Corp.
Carrollton, Texas

50579
Litronix Inc.
Cupertino, California

51605
Scientific Components Inc.
Linden, New Jersey

53021
Sangamo Electric Co.
Springfield, Illinois

54294
Cutler-Hammer Inc. formerly
Shallcross, A Cutter-Hammer Co.
Selma, North Carolina

55026
Simpson Electric Co.
Div. of Am. Gage and Mach. Co.
Elgin, Illinois

56289
Sprague Electric Co.
North Adams, Massachusetts

58474
Superior Electric Co.
Bristol, Connecticut

60399
Torin Corp. formerly
Torrington Mfg. Co.
Torrington, Connecticut

63743
Ward Leonard Electric Co., Inc.
Mount Vernon, New York

64834
West Mfg. Co.
San Francisco, California

65092
Weston Instruments Inc.
Newark, New Jersey

66150
Winslow Tele-Tronics Inc.
Eaton Town, New Jersey
70485
Atlantic India Rubber Works
Chicago, Illinois

70563
Amperite Company
Union City, New Jersey

70903
Belden Corp.
Geneva, Illinois

71002
Birnback Radio Co., Inc.
Freeport, New York

71400
Bussmann Mfg.
Div. of McGraw-Edison Co.
Saint Louis, Missouri

71450
CTS Corp.
Elkhart, Indiana

71468
ITT Cannon Electric Inc.
Santa Ana, California

71482
Clare, C.P. & Co.
Chicago, Illinois

71590
Centrelab Electronics
Div. of Globe Union Inc.
Milwaukee, Wisconsin

71707
Coto Coil Co., Inc.
Providence, Rhode Island

71744
Chicago Miniature Lamp Works
Chicago, Illinois

71785
TRW Electronics Components
Cinch Connector Operations Div.
Elk Grove Village
Chicago, Illinois

72005
Wilber B. Driver Co.
Newark, New Jersey

72092
Replaced by 06980

72136
Electro Motive Mfg. Co.
Williamantic, Connecticut

72259
Nytronics Inc.
Pelham Manor, New Jersey

72619
Dialight Div.
Amperex Electronic Corp.
Brooklyn, New York

72653
G.C. Electronics
Div. of Hydrometals, Inc.
Brooklyn, New York

72665
Replaced by 90303
72794
Dzus Fastener Co., Inc.
West Islip, New York

72928
Gulton Ind. Inc.
Gudeman Div.
Chicago, Illinois

72982
Erie Tech. Products Inc.
Erie, Pennsylvania

73138
Bechman Instrument Inc.
Helipot Division
Fullerton, California

73293
Hughes Aircraft Co.
Electron Dynamics Div.
Torrance, California

73445
Amperex Electronic Corp.
Hicksville, New York

73559
Carling Electric Inc.
West Hartford, Connecticut

73586
Circle F Industries
Trenton, New Jersey

73734
Federal Screw Products, Inc.
Chicago, Illinois

73743
Fischer Special Mfg. Co.
Cincinnati, Ohio

73899
JFD Electronics Co.
Components Corp.
Brooklyn, New York

73949
Guardian Electric Mfg. Co.
Chicago, Illinois

74199
Quan Nichols Co.
Chicago, Illinois

74217
Radio Switch Corp.
Marlboro, New Jersey

74276
Signalite Div.
General Instrument Corp.
Neptune, New Jersey

74306
Piezo Crystal Co.
Carlisle, Pennsylvania

74542
Hoyt Elect. Instr. Works
Penacook, New Hampshire

74970
Johnson E.F., Co.
Waseca, Minnesota

75042
TRW Electronics Components
IRC Fixed Resistors
Philadelphia, Pennsylvania

75376
Kurz-Kasch Inc.
Dayton, Ohio

75378
CTS Knights Inc.
Sandwich, Illinois

75382
Kulka Electric Corp.
Mount Vernon, New York

75915
Littlefuse Inc.
Des Plaines, Illinois

76854
Oak Industries Inc.
Switch Div.
Crystal Lake, Illinois

77342
AMF Inc.
Potter & Brumfield Div.
Princeton, Indiana

77638
General Instrument Corp.
Rectifier Division
Brooklyn, New York

77969
Rubbercraft Corp. of CA. LTD.
Torrance, California

78189
Shakeproof
Div. of Illinois Tool Works Inc.
Elgin, Illinois

78277
Sigma Instruments, Inc.
South Braintree, Massachusetts

78488
Stackpole Carbon Co.
Saint Marys, Pennsylvania

78553
Eaton Corp. Engineered
Fastener Div.
Tinnerman Plant
Cleveland, Ohio

79136
Waldes Kohinoor Inc.
Long Island City, New York

79497
Western Rubber Company
Goshen, Indiana

79963
Zierick Mfg. Corp.
Mt. Kisko, New York

80031
Electro-Midland Corp.
Mepco Div.
A North American Phillips Co.
Norristown, New Jersey

80145
LFE Corp., Process Control Div.
formerly API Instrument Co.
Chesterland, Ohio

80183
Use 56289
Sprague Products
North Adams, Massachusetts

80294
Bourns Inc., Instrument Div.
Riverside, California

80583
Hammarlund Mfg. Co., Inc.
Red Bank, New Jersey

80640
Arnold Stevens, Inc.
South Boston, Massachusetts

81073
Grayhill, Inc.
La Grange, Illinois

81312
Winchester Electronics
Div. of Litton Industries Inc.
Oakville, Connecticut

81483
Therm-O-Disc Inc.
Mansfield, Ohio

81483
International Rectifier Corp.
Los Angeles, California

81590
Korry Mfg. Co.
Seattle, Washington

81741
Chicago Lock Co.
Chicago, Illinois

82305
Palmer Electronics Corp.
South Gate, California

82389
Switchcraft Inc.
Chicago, Illinois

82415
North American Phillips
Controls Corp.
Frederick, Maryland

82872
Roanwell Corp.
New York, New York

82877
Rotron Inc.
Woodstock, New York

82879
ITT Royal Electric Div.
Pawtucket, Rhode Island

83003
Varo Inc.
Garland, Texas

83058
The Carr Co., United Can Div.
of TRW
Cambridge, Massachusetts

83298
Bendix Corp.
Electric Power Div.
Eatontown, New Jersey

83330
Herman H. Smith, Inc.
Brooklyn, New York

83478
Rubbercraft Corp.
of America, Inc.
West Haven, Connecticut

83594
Burroughs Corp.
Electronic Components Div.
Plainfield, New Jersey

83740
Union Carbide Corp.
Battery Products Div.
formerly Consumer Products Div.
New York, New York

84171
Arco Electronics
Great Neck, New York

84411
TRW Electronic Components
TRW Capacitors
Ogallala, Nebraska

84613
Fuse Indicator Corp.
Rockville, Maryland

84682
Essex International Inc.
Industrial Wire Div.
Peabody, Massachusetts

86577
Precision Metal Products
of Malden Inc.
Stoneham, Massachusetts

86684
Radio Corp. of America
Electronic Components Div.
Harrison, New Jersey

86928
Seastrom Mfg. Co., Inc.
Glendale, California

87034
Illuminated Products Inc.
Subsidiary of Oak Industries Inc.
Anahiem, California

88219
Gould Inc.
Industrial Div.
Trenton, New Jersey

88245
Litton Systems Inc.
Useco Div.
Van Nuys, California

88419
Cornell-Dubilier Electronic Div.
Federal Pacific Co.
Fuquay-Varian, North Carolina

88486
Plastic Wire & Cable
Jewitt City, Connecticut

88690
Replaced by 04217

89536
John Fluke Mfg. Co., Inc.
Seattle, Washington

89730
G.E. Co., Newark Lamp Works
Newark, New Jersey

Federal Supply Codes for Manufacturers (cont)

90201
Mallory Capacitor Co.
Div. of P.R. Mallory Co., Inc.
Indianapolis, Indiana

90211
Use 56365
Square D Co.
Chicago, Illinois

90215
Best Stamp & Mfg. Co.
Kansas City, Missouri

90303
Mallory Battery Co.
Div. of Mallory Co., Inc.
Tarrytown, New York

91094
Essex International Inc.
Suglex/IWP Div.
Newmarket, New Hampshire

91293
Johanson Mfg. Co.
Boonton, New Jersey

91407
Replaced by 58474

91502
Associated Machine
Santa Clara, California

91506
Augat Inc.
Attleboro, Massachusetts

91637
Dale Electronics Inc.
Columbus, Nebraska

91662
Elco Corp.
Willow Grove, Pennsylvania

91737
Use 71468
Gremar Mfg. Co., Inc.
ITT Cannon/Gremar
Santa Ana, California

91802
Industrial Devices, Inc.
Edgewater, New Jersey

91833
Keystone Electronics Corp.
New York, New York

91836
King's Electronics Co., Inc.
Tuckahoe, New York

91929
Honeywell Inc.
Micro Switch Div.
Freeport, Illinois

91934
Miller Electric Co., Inc.
Div. of Aunet
Woonsocket, Rhode Island

92194
Alpha Wire Corp.
Elizabeth, New Jersey

93332
Sylvania Electric Products
Semiconductor Products Div.
Woburn, Massachusetts

94145
Replaced by 49956

94154
Use 94988
Wagner Electric Corp.
Tung-Sol Div.
Newark, New Jersey

94222
Southco Inc. formerly
South Chester Corp.
Lester, Pennsylvania

95146
Alco Electronic Products Inc.
Lawrence, Massachusetts

95263
Leecraft Mfg. Co.
Long Island City, New York

95264
Replaced by 98278

95275
Vitramon Inc.
Bridgeport, Connecticut

95303
RCA Corp.
Receiving Tube Div.
Cincinnati, Ohio

95348
Gordo's Corp.
Bloomfield, New Jersey

95354
Methode Mfg. Corp.
Rolling Meadows, Illinois

95712
Bendix Corp.
Electrical Components Div.
Microwave Devices Plant
Franklin, Indiana

95987
Weckesser Co. Inc.
Chicago, Illinois

96733
San Fernando Electric Mfg. Co.
San Fernando, California

96853
Gulton Industries Inc.
Measurement and Controls Div.
formerly Rustrak Instruments Co.
Manchester, New Hampshire

96881
Thomson Industries, Inc.
Manhasset, New York

97540
Master Mobile Mounts, Div. of
Whitehall Electronics Corp.
Ft. Meyers, Florida

97913
Industrial Electronic
Hardware Corp.
New York, New York

97945
Penwalt Corp.
SS White Industrial Products Div.
Piscataway, New Jersey

97966
Replaced by 11358

98094
Replaced by 49956

98159
Rubber-Teck, Inc.
Gardena, California

98278
Malco A Microdot Co., Inc.
Connector & Cable Div.
Pasadena, California

98291
Sealectro Corp.
Mamaroneck, New York

98388
Royal Industries
Products Div.
San Diego, California

98743
Replaced by 12749

98925
Replaced by 14433

99120
Plastic Capacitors, Inc.
Chicago, Illinois

99217
Bell Industries Elect.
Comp. Div.
formerly Southern Elect. Div.
Burbank, California

99392
STM
Oakland, California

99515
ITT Jennings Monrovia Plant
Div. of ITT Jennings formerly
Marshall Industries Capacitor Div.
Monrovia, California

99779
Use 29587
Bunker-Ramo Corp.
Barnes Div.
Landsdowne, Pennsylvania

99800
American Precision Industries Inc.
Delevan Division
East Aurora, New York

99942
Centrelab Semiconductor
Centrelab Electronics Div. of
Globe-Union Inc.
El Monte, California

Toyo Electronics
(R-Ohm Corp.)
Irvine, California

National Connector
Minneapolis, Minnesota

U.S. SALES AREAS for all Fluke products

AK, Anchorage
Harry Lang & Associates
1371 Hillcrest Drive #303
Anchorage, AK 99503
(907) 279-5741

AL, Huntsville
John Fluke Mfg. Co., Inc.
3322 S. Memorial Parkway
Suite 96
Huntsville, AL 35801
(205) 881-6220

AZ, Tempe
John Fluke Mfg. Co., Inc.
2125 S. 48th Street
Suite 104
Tempe, AZ 85282
(602) 967-8724
Tucson
(602) 790-9881

CA, Los Angeles
John Fluke Mfg. Co., Inc.
20902 South Bonita St.
Carson, CA 90746
(213) 538-3900
or (714) 761-2449

San Diego
John Fluke Mfg. Co., Inc.
9601 Aero Drive, Suite 290
San Diego, CA 92123
(714) 226-1254

Santa Clara
John Fluke Mfg. Co., Inc.
2300 Walsh Ave., Bldg. K
Santa Clara, CA 95051
(408) 727-0513

Tustin
John Fluke Mfg. Co., Inc.
15445 Red Hill Ave., Suite F
Tustin, CA 92680
(714) 838-8863

CO, Denver
John Fluke Mfg. Co., Inc.
1980 South Quebec St. #4
Denver, CO 80231
(303) 750-1222

CT, Hartford
John Fluke Mfg. Co., Inc.
Glen Locken East
41-C New London Turnpike
Glastonbury, CT 06033
(203) 659-3541

FL, Orlando
John Fluke Mfg. Co.,Inc.
940 N. Fern Creek Ave.
Orlando, FL 32803
(305) 896-4881

GA, Atlanta
John Fluke Mfg. Co., Inc.
2700 Delk Rd., Suite 250
Marietta, GA 30067
(404) 953-4747

HI, Honolulu
EMC Corporation
2979 Ualena St.
Honolulu, HI 96819
(808) 836-1138

IA, Iowa City
(319) 354-2811

IL, Chicago
John Fluke Mfg. Co., Inc.
3740 Industrial Ave.
Rolling Meadows, IL 60008
(312) 398-0850

IN, Indianapolis
John Fluke Mfg. Co., Inc.
877 Purdue
Suite 101
Indianapolis, IN 46268
(317) 875-7870

KS, Kansas City
John Fluke Mfg. Co., Inc.
4550 W. 109th St., Suite 130
Shawnee Mission, KA 66211
(913) 381-9800

LA, New Orleans
(504) 455-0814

MA, Burlington
John Fluke Mfg. Co., Inc.
25 "B" Street
Burlington MA 01803
(617) 273-4674

MD, Baltimore
(301) 792-7060

Rockville
John Fluke Mfg. Co., Inc.
5640 Fishers Lane
Rockville, MD 20852
(301) 770-1570

MI, Detroit
John Fluke Mfg. Co., Inc.
13955 Farmington Rd.
Livonia, MI 48154
(313) 522-9140

MN, Bloomington
John Fluke Mfg. Co., Inc.
1801 E. 79th St., Suite 9
Bloomington, MN 55420
(612) 854-5526

MO, St. Louis
John Fluke Mfg. Co., Inc.
2029 Woodland Parkway
Suite 105
St. Louis, MO 63141
(314) 993-3805

NC, Greensboro
John Fluke Mfg. Co., Inc.
1310 Beaman Place
Greensboro, NC 27408
(919) 273-1918

NJ, Paramus
John Fluke Mfg. Co., Inc.
P.O. Box 930
West 75 Century Road
Paramus, NJ 07652
(201) 262-9550

NM, Albuquerque
John Fluke Mfg. Co., Inc.
1108 Alvarado Drive N.E.
Albuquerque, NM 87110
(505) 881-3550

NY, Rochester
John Fluke Mfg. Co., Inc.
4515 Culver Road
Rochester, NY 14622
(716) 323-1400

OH, Cleveland
John Fluke Mfg. Co., Inc.
7830 Freeway Circle
Middleburg Heights, OH 44130
(216) 234-4540

Columbus
(614) 889-5715

Dayton
John Fluke Mfg. Co., Inc.
4756 Fishburg Rd.
Dayton, OH 45424
(513) 233-2238

OR, Portland
John Fluke Mfg. Co., Inc.
18360 S.W. Springfield Lane
Aloha, OR 97007
(503) 642-1342

PA, Philadelphia
John Fluke Mfg. Co., Inc.
1010 West 8th Ave., Suite H
King of Prussia, PA 19406
(215) 265-4040

Pittsburgh
(412) 261-5171

TX, Austin
John Fluke Mfg. Co., Inc.
Creek Gardens, Suite 103
8705 Shoal Creek Blvd.
Austin, TX 78758
(512) 459-3344

Dallas
John Fluke Mfg. Co., Inc.
14400 Midway Road
Dallas, TX 75234
(214) 233-9990

Houston
John Fluke Mfg. Co., Inc.
4240 Blue Bonnet Dr.
Stafford, TX 77477
(713) 491-5995

San Antonio
John Fluke Mfg. Co., Inc.
10417 Gulfdale
San Antonio, TX 78216
(512) 340-2621

UT, Salt Lake City
John Fluke Mfg. Co., Inc.
5226 So. 300 West, Suite #2
Salt Lake City, UT 84107
(801) 268-9331

WA, Seattle
John Fluke Mfg. Co., Inc.
5020 148th Ave. N.E.
Suite #110
Redmond, WA 98052
(206) 881-6966

Service Center Areas

CA, Burbank (213) 849-4641
CA, Santa Clara (408) 727-8121
CO, Denver (303) 750-1228
FL, Orlando (305) 896-2296
IL, Chicago (312) 398-5800
MA, Burlington (617) 273-4678
MD, Rockville (301) 770-1576
NJ, Paramus (201) 262-9550
TX, Dallas (214) 233-9945
WA, Everett (206) 356-5560

For more information on Fluke products or Sales Offices you may dial (800) 426-0361 toll-free in most of the U.S.A. From Alaska, Hawaii, or Washington, phone (206) 356-5400. From Canada and other countries phone (206) 356-5500.

FLUKE®
John Fluke Mfg. Co., Inc., P.O. Box C9090, Everett, WA 98206
Fluke (Holland) B.V., P.O. Box 5053, 5004 EB, Tilburg, The Netherlands. Phone (013) 673973
Litho in U.S.A. 1/83

INTERNATIONAL SALES OFFICES

Argentina ●
Coasin, S.A.
Virrey del Pino 4071
Buenos Aires, Argentina
Tel: 552-5248, TLX. 22284

Australia ●
Elmeasco Instruments Pty Ltd
P.O. Box 30, Concord, N.S.W.
Australia 2137
Tel: (2) 736-2888, TLX: (790) 25887

Elmeasco Instruments Pty Ltd.
21-23 Anthony Drive
Mt. Waverly, VIC 3149
Australia
Tel. 233-4044, TLX: (790) 36206

Elmeasco Instruments Pty Ltd.
Professional Suites Bldg.
G.P.O. Box 2360
Brisbane, 4001, Australia
Tel: (07) 229-3161

Elmeasco Instruments Pty Ltd
G.P.O. Box 1240, Adelaide
South Australia 5001
Tel: (08) 271-1839

Elmeasco Instruments Pty. Ltd.
P.O. Box 95, Gosnells
West Australia 6110
Tel: (09) 398-3362

Austria ■
Walter Rekirsch
Elektronische Gerate GmbH & Co.
Vertrieb KG
Obachgasse 28
Vienna, Austria
Tel: (0222) 235555, TLX: 134759

Bangladesh ●
Motherland Corporation
24 Hatkhola Rd., Tikatuli
Dacca 3, Bangladesh
Tel: 257249 or 255776

Belgium ■
Fluke (Belgium) S.A./N.V.
6, Rue de Geneve
1140 Brussels, Belgium
Tel: (2) 2164090, TLX: 26312

Bolivia ●
Coasin Bolivia S.R.L.
Casilla 7295, La Paz, Bolivia
Tel: 40962, TLX: 3233

Brazil ●
Fluke Brasil-Industria E
Commercio LTDA
Al. Amazonas 422,
Alphaville, Barueri,
CEP 06400 Sao Paulo, Brazil
Tel. (011) 421-5477, TLX. 01135589

Fluke Brasil-Industria E
Commercio LTDA
Av. Henrique Valadares, 23/401
Rio de Janeiro, Brazil
Tel: 252-1297

Brunei ●
Rank O'Connor's (PTE) Limited
No. 8, BK.D
Surfri Shop House Complex
Mile 1, Jalong Tutong
Bandar Seri Begawan, Brunei
Tel: 26680

Bulgaria ■
Amtest Associates Ltd.
Clarence House, 31, Clarence St.
Staines, Middlesex TW18 4SY
United Kingdom
Tel: (784) 63555, TLX: 928855

Canada ●
Allan Crawford Assoc., Ltd.
#14 1935 30th Ave. N.E.
Calgary, Alberta T2E 6Z5
Tel: (403) 230-1341, TLX: 03-821186

Allan Crawford Assoc., Ltd.
P.O. Bag 3967
Postal Station "D"
Edmonton, Alberta T5L 4K1
Tel: (403) 451-4893

Allan Crawford Assoc., Ltd.
3795 William Street
Burnaby, British Columbia V5C 3H3
Tel: (604) 294-1326, TLX: 04-54247

Allan Crawford Assoc., Ltd.
881 Lady Ellen Place
Ottawa, Ontario K1Z 5L3
Tel: (613) 722-7682, TLX: 0533600

Allan Crawford Assoc., Ltd
6503 Northam Drive
Mississauga, Ontario L4V 1J2
Tel: (416) 678-1500, TLX: 06968769

Allan Crawford Assoc., Ltd
7918 cote de Liesse
St. Laurent, Quebec H4T 1E7
Tel: (514) 731-8564, TLX: 05824944

Chad ■
Fluke (Holland) B.V.
P.O. Box 5053, 5004 EB Tilburg
Zevenheuvelenweg 53, 5048 AN Tilburg
The Netherlands
Tel: (013) 673973, TLX: 52237

Chile ●
Intronica Chile Ltda.
Manuel Montt 024 - Of. D
Casilla 16228, Santiago 9, Chile
Tel: 44940, TLX: 240301
Attn. Intronica Chile

China, People's Republic of ●
Fluke international Corporation
P.O. Box C9090
Everett, WA 98206, U.S.A.
Tel: (206) 356-5511
TLX: 152662 JOHN FLUKE EVT

Colombia ●
Sistemas E Instrumentacion, Ltda
Carrera 13, No. 37-43, Of. 401
Ap. Aereo 29583
Bogota DE, Colombia SA
Tel: 232-45-32, TLX: 45787

Cyprus ■
Chris Radiovision Ltd.
P.O. Box 1989, Nicosia, Cyprus
Tel: 66121, TLX: 8262395

Czechoslovakia ■
Amtest Associates Ltd
Clarence House, 31, Clarence St.
Staines, Middlesex TW18 4SY
United Kingdom
Tel: (784) 63555, TLX: 928855

Denmark ■
Tage Olsen A/S
Ballerup Byvej 222
DK - 2750 Ballerup, Denmark
Tel: (2) 658111, TLX: (855) 35293

Ecuador ●
Proteco Coasin Cia., Ltda.
Edificio "Jerico"
Ave. 12 de Octubre #2285 y
Ave. Orellana (Planta Baja)
Quito, Ecuador
Tel: 529684, TLX: (393) 2865

Proteco Coasin Cia., Ltda
Calderon 103 y Malecon
Casilla #9733
Guayaquil, Ecuador
Tel: 526093

Egypt and Sudan ■
Electronic Engineering Liaison Office
P.O. Box 2891 Horreya
Heliopolis, Cairo, Egypt
Tel: 691588, TLX: (927) 92502

England ■
Fluke (Great Britain) LTD
Colonial Way
Watford, Herts, WD2 4TT
United Kingdom
Tel: (0923) 40511, TLX: (851) 934583
Rapifax: (0923) 25067

Ethiopia ■
Fluke (Holland) B.V.
P.O. Box 5053, 5004 EB Tilburg
Zevenheuvelenweg 53, 5048 AN Tilburg
The Netherlands
Tel: (013) 673973, TLX: 52237

Fiji ●
AWA Fiji
47 Forster Road, Walu Bay
Suva, Fiji
Tel: 312079, TLX: FJ2347

Finland ■
Oy Findip AB, Teollisuustie 7
02700 Kauniainen, Finland
Puh: (0) 5052255, TLX: (857) 123129

France ■
M.B. Electronique S.A.
Rue Fourny 606, Z1 Centre
78530 BUC
B.P. No. 31
78530 BUC, France
Tel: (3) 9568131, TLX: (842) 695414

German Democratic Republic ■
Amtest Associates Ltd
Clarence House, 31, Clarence St.
Staines, Middlesex TW18 4SY
United Kingdom
Tel: (784) 63555, TLX: 928855

German Federal Republic ■
Fluke (Deutschland) GmbH
Max-Hueber StraBe 8
8045 Ismaning, West Germany
Tel: (089) 96050, TLX: 522472
Rapifax: (089) 9605166

Fluke (Deutschland) GmbH
Meineckestrasse 53
4000 Dusseldorf 30, West Germany
Tel: (0211) 450831, TLX: (841) 8585576

Greece ■
Hellenic Scientific Representations Ltd
11, Vrasside Street
Athens 612, Greece
Tel: (1) 711140, TLX: (863) 219330

Hong Kong ●
Schmidt & Co. (H.K.) Ltd.
28th Fl. Wing on Centre
111 Connaught Road
Central Hong Kong
Tel: 5-455644
TLX: 74766

Hungary ■
Amtest Associates Ltd
Clarence House, 31, Clarence St.
Staines, Middlesex TW18 4SY
United Kingdom
Tel: (784) 63555, TLX: 928855

Iceland ●
Kristjan O. Skagfjord Ltd.
P.O. Box 906
Reykjavik, Iceland
Tel: 24120, TLX: 2133

India ●
Hinditron Services Pvt. Ltd.
69/A.L. Jagmohandas Marg
Bombay 400 006, India
Tel: 811316, TLX: 112326

Hinditron Services Pvt. Ltd.
8th Main Road
33/44-A Raj Mahl Vilas Extension
Bangalore 560 080, India
Tel: 33139, TLX: (953) 0845741

Hinditron Services Pvt. Ltd.
Shantiniketan, Office No 6
6th Floor, 8 Camac Street
Calcutta 700 017, India
Tel: 434032, 447541

Hinditron Services Pvt. Ltd
204-206 Henkunt Tower
98 Nehri Place
New Delhi, 110019, India
Tel: 640360, TLX: (95) 314890

Hinditron Services Pvt. Ltd.
Srinath Complex, 5th Floor
1-1-58/1 to 1-1-58/11
Sarojini Devi Road
Secunderabad 500 003, India
Tel: 821117, TLX: (953) 0155 575

Indonesia ●
P.T. Dwi Tunggal Jaya Sakti
Kebayoran Baru
Jakarta Selatan, Indonesia
Tel: 716374, TLX: 45305

Iraq ■
Fluke (Holland) B.V.
P.O. Box 5053, 5004 EB Tilburg
Zevenheuvelenweg 53, 5048 AN Tilburg
The Netherlands
Tel: (013) 673973, TLX: 52237

Ireland ■
Euro Electronics
32 Brews Hill
Naven County Meath, Ireland
Tel: (46) 23577, TLX: (851) 3182

Israel ■
R.D.T. Electronics Engineering Ltd.
P.O. Box 75
46, Sokolov Street
Ramat Hasharon 47235, Israel
Tel: (3) 483216, TLX: (922) 32143

Italy ■
Sistrel S.p.A.
Via Pelizza da Volpedo 59
20092 Cinisello Balsamo
Milan, Italy
Tel: (2) 6181893, TLX: (843) 334643

Sistrel S.p.A.
Via Giuseppe Armellini No. 39
00143 Rome, Italy
Tel: (6) 5915551, TLX: (843) 68356

Sistrel S.p.A.
Via Cinto
Parco S. Paolo
80126 Naples, Italy
Tel: (81) 7679700

Japan ●
John Fluke Mfg. Co., Inc.
Japan Branch
Sumitomo Higashi
Shinbashi Bldg.
1-1-11 Hamamatsucho
Minato-ku, Tokyo, Japan
Tel: (03) 434-0181, TLX: 2424331

FLUKE®

John Fluke Mfg. Co., Inc. / PO Box C9090 / Everett, WA 98206 / (206) 356 5400

Litho in U.S.A. 1/83

Kenya ●
ADCOM Ltd
P.O. Box 30070
Nairobi, Kenya, East Africa
Tel: 331955, TLX: 22639

Korea ●
Electro-Science Korea Co
C.P.O. Box 8446
Room 403, Boondo Bldg
56-12 Jangchung-IKa
Jung-ku
Seoul, Korea
Tel: 261-7702, TLX: K25381

Kuwait ■
Al-Bahar Int. Group
P.O. Box 26672 Safat
Kuwait, Arabian Gulf
Tel: 4501087, TLX: 44822

Lebanon and Jordan ■
Mabek (Electronic Division)
P.O. Box 11-3823
Beirut, Lebanon
Tel: 812523, TLX: (923) 22889

Libya ■
Fluke (Holland) B.V.
P.O. Box 5053, 5004 EB Tilburg
Zevenheuvelenweg 53, 5048 AN Tilburg
The Netherlands
Tel: (013) 673973, TLX: 52237

Malaysia ●
Mecomb Malasia SDN BHD
Lot 2, Lorong 13/6A
Petaling Jaya, Malasia
Tel: 573455, TLX: MA37605

Mexico ●
Electronica y Tecnologia
Avanzada S.A. de C.V.
Patrucio Padilla 53
Circuito Comercial Satelite
Naucalpann Edo. De Mexico
Tel: 393 0902
TLX: (383) 017 2697

Nepal ●
Associated Enterprises
GPO Box 790, Pyaphal Tole
Kathmandu, Nepal
Tel: 13868

Netherlands ■
Fluke (Nederland) B.V.
Gasthuisring 14
5041 DS Tilburg
The Netherlands

P.O. Box 115
5000 AC Tilburg
The Netherlands
Tel: (013) 352455, TLX: 52683

New Zealand ●
McLean Information Technology, Ltd
P.O. Box 9464, Newmarket
Auckland 1, New Zealand
Tel: 501-801, TLX: (791) NZ 215 70

McLean Information Technology Ltd.
P.O. Box 496
Wellington, New Zealand
Tel: 851-450 or 844-424

Nigeria ●
Mofat Engineering Co., Ltd
P.O. Box 6369
Lagos, Nigeria
Tel: 960744, TLX: 21353

Norway ■
Morgenstierne & Co A/S
Konghellegate 3
P.O. Box 6688, Rodelokka
Oslo 5, Norway
Tel: (2) 356110, TLX: (856) 71719

Oman ■
OHI Communications
P.O. Box 889
Muscat
Sultanate of Oman
Tel: 702666 or 703862
TLX: 3168

Pakistan ●
Pak International Operations
505 Muhammadi House
I.I. Chundrigar Road
P.O. Box 5323, Karachi, Pakistan
Tel: 221127, TLX: (952) 24494

PDR Yemen ■
Fluke (Holland) B.V.
P.O. Box 5053, 5004 EB Tilburg
Zevenheuvelenweg 53, 5048 AN Tilburg
The Netherlands
Tel: (013) 673973, TLX: 52237

Peru ●
Importaciones Y Representaciones
Electronicas S.A.
Avda. Franklin D. Roosevelt 105
Lima 1, Peru
Tel: 288650, TLX: (394) 25663

Philippines ●
Spark Radio & Electronics, Corp.
1044 Origpin St., Sta. Cruz
Manila, Philippines
Tel: 47-11-94, TLX: 27901

Spark Radio & Electronics Corp.
Greenhills P.O. Box 610
San Juan, Metro-Manila
Philippines Zip 3113
Tel: 77-51-92

Poland ■
Amtest Associates Ltd
Clarence House, 31, Clarence St
Staines, Middlesex TW18 4SY
United Kingdom
Tel: (784) 63555, TLX: 928855

Portugal ■
Decada-Equipamentos de
Electronica, Lda
Rue Pedro Nunes, 47-C
1000 Lisboa, Portugal
P.O. Box 1128, 1003 Lisboa Codex
Tel: (19) 574984, TLX: (832) 18469

Qatar ■
Technology Organisation
P.O. Box 5549, Doha, Qatar
Tel: 321431, TLX: (957) 4581

Romania ■
Amtest Associates Ltd
Clarence House, 31, Clarence St
Staines, Middlesex TW18 4SY
United Kingdom
Tel: (784) 63555, TLX: 928855

Saudi Arabia ■
Electronic Equipment Marketing Co
P.O. Box 3750
Riyadh, Saudi Arabia
Tel: (1) 477-165001
TLX: (928) 201120

Singapore ●
Rank O'Connor's (PTE) Limited
98 Pasir Panjang Road
Singapore 0511
Republic of Singapore
Tel: 637944
TLX: RS21023

Somalia ■
Fluke (Holland) B.V.
P.O. Box 5053, 5004 EB Tilburg
Zevenheuvelenweg 53, 5048 AN Tilburg
The Netherlands
Tel: (013) 673973, TLX: 52237

South Africa ●
Fluke S.A. (Pty) Ltd
P.O. Box 39797, Bramley 2018
Republic of South Africa
Tel: (011) 786-3170, TLX: 424328

Spain ■
Hispano Electronics S.A.
Poligono Industrial Urtinsa
Apartado de Correos 48
Alcorcon (Madrid), Spain
Tel: (1) 6194108
TLX: (831) 22404

Sri Lanka ●
Jay-Es Electronics
160 Poorvarama Mawatha
Colombo 5, Sri Lanka
Tel: 073-2393

Sweden ■
Teleinstrument AB
P.O. Box 4490
162 04 Vallingby, Sweden
Tel: (8) 380370, TLX: (854) 15770

Switzerland ■
Traco Electronic AG
Jenatschstrasse 1
8002 Zurich, Switzerland
Tel: (1) 2010711, TLX: (845) 54318

Syria ■
Mabek (Electronic Division)
P.O. Box 4238
Damascus, Syria

Taiwan ●
Schmidt Scientific Far East Ltd
906, Chia Hsin Bldg
96, Chung Shan N. Rd., Sec. 2
Taipei, Taiwan
Tel: 5414600, TLX: 11111

Thailand ●
Measuretronix Ltd
1899/10 Ramkamhaeng Rd.
Huamark, Bangkok 24, Thailand
Tel: 3143369, TLX: 81143

Tunesia ■
Selep S.A.R.L.
6, Rue de Sparte
Tunis - 1000 RP, Tunesia
Tel: (1) 248093, TLX: (934) 13030

Turkey ■
Erkman Elektronik Aletler
Ticaret Anonim Sirketi
Necatibey Cad 92/3
Karakoy, Istanbul, Turkey
Tel: 441546
TLX: (821) 23353

United Arab Emirates ■
Al Sanani Trad. Est
P.O. Box 7187
Abu-Dhabi, United Arab Emirates
Tel: 821370 or 821371
TLX: 23966

United Kingdom ■
Fluke (Great Britain) Ltd
Colonial Way
Watford, Herts, WD2 4TT
United Kingdom
Tel: (0923) 40511, TLX: 934583
Rapifax: (0923) 25067

Uruguay ●
Coasin Uruguaya S.A.
Casilla de Correos 1400
Libertad 2529
Montevideo, Uruguay
Tel: 78-90-16, TLX: UY6571

U.S.S.R. ■
Amtest Associates Ltd
Clarence House, 31, Clarence St
Staines, Middlesex TW18 4SY
United Kingdom
Tel: (784) 63555, TLX: 928855

Venezuela ●
Coasin, C.A.
Calle 9 Con Calle 4, Edif. Edinurbi
Apartado De Correos
NR-70 136 Los Ruices
Caracas 1070A, Venezuela
Tel: 239-0967, TLX: (395) 21027

Yemen ■
Fluke (Holland) B.V.
P.O. Box 5053, 5004 EB Tilburg
Zevenheuvelenweg 53, 5048 AN Tilburg
The Netherlands
Tel: (013) 673973, TLX: 52237

Yugoslavia ■
Amtest Associates Ltd.
Clarence House, 31, Clarence St
Staines, Middlesex TW18 4SY
United Kingdom
Tel: (784) 63555, TLX: 928855

■ Supplied and Supported by —

Fluke (Holland) B.V.
P.O. Box 5053, 5004 EB Tilburg
Zevenheuvelenweg 53, 5048 AN Tilburg
The Netherlands
Tel: (013) 673973, TLX: 52237

● Supplied and Supported by —

Fluke International Corporation
P.O. Box C9090
Everett, WA 98206 U.S.A.
Tel: (206) 356-5500
TLX: 152662 JOHN FLUKE EVT

FLUKE®

TECHNICAL SERVICE CENTERS

U.S.A.

CA, Burbank
John Fluke Mfg. Co., Inc.
(213) 849-4641

CA, Santa Clara
John Fluke Mfg. Co., Inc.
(408) 727-8121

CO, Denver
John Fluke Mfg. Co., Inc.
(303) 750-1228

FL, Orlando
John Fluke Mfg. Co., Inc.
(305) 896-2296

IL, Rolling Meadows
John Fluke Mfg. Co., Inc.
(312) 398-5800

MA, Burlington
John Fluke Mfg. Co., Inc.
(617) 273-4678

MD, Rockville
John Fluke Mfg. Co., Inc.
(301) 770-1576

NJ, Paramus
John Fluke Mfg. Co., Inc.
(201) 262-9550

TX, Dallas
John Fluke Mfg. Co., Inc.
(214) 233-9945

WA, Everett
John Fluke Mfg. Co., Inc.
(206) 356-5560

Other Countries

Argentina, Buenos Aires
Coasin S.A.
Tel: 552-5248/3485
TLX: 122284 COASN AR

Australia, Concord
Elmeasco Instruments Pty Ltd.
Tel: (02) 736-2888
TLX: (790) 25887

Australia, Mount Waverley
Elmeasco Instruments Pty Ltd.
Tel: 03-233-4044
TLX: 36206

Australia, Brisbane
Elmeasco Instruments Pty Ltd.
Tel: (07) 229-3161

Austria, Vienna
Walter Rekirsch Electronische Gerate GmbH & Co.
Tel: (0222) 235555
TLX: 134759

Belgium, Brussels
Fluke (Belgium) SA/NA
Tel: (02) 2164090
TLX: 26312

Brazil, Sao Paulo
Fluke Brasil-Industria E Comercio Ltda.
Tel: (011) 421-3603
TLX: 01135589 FLKE BR

Canada, Calgary, AB
Allan Crawford Associates Ltd.
Tel: (403) 230-1341

Canada, Burnaby, BC
Allan Crawford Associates Ltd.
Tel: (604) 294-1326

Canada, Mississauga, ON
Allan Crawford Associates Ltd.
Tel: (416) 678-1500

Canada, St. Laurent, PQ
Allan Crawford Associates Ltd.
Tel: (514) 731-8564

Chile, Santiago
Intronica Chile Ltda.
Tel: 44940
TLX: 240301

China, Beijing
Beijing Radio Research Institute
Tel: 445612

Colombia, Bogota
Sistemas E Instrumentacion, Ltda.
Tel: 232-45-32
TLX: 45787 COASN CO

Denmark, Ballerup
Tage Olsen A/S
Tel: (02) 658111
TLX: 35293 TOAS SK

Ecuador, Quito
Edificio "Jerico"
Tel: 529684, 526759
TLX: 2865 Protec Ed

Egypt, Cairo
Electronic Engineering Liaison Office
Tel: 691588
TLX: (927) 92502

England, Watford, Herts
Fluke (Great Britain) LTD
Tel: 44-923-40511
TLX: 934583

Finland, Kauniainen
Oy Findip AB
Tel: (0) 5052255
TLX: 123129

France, BUC
M.B. Electronique S.A.
Tel: (01) 9568131
TLX: 695414

Greece, Athens
Hellenic Scientific Representations
Tel: (01) 711140
TLX: 219330

Hong Kong, Hong Kong
Schmidt & Co. (H.K.) Ltd.
Tel: 5-455644
TLX: 74766 SCHMC HX

India, Bombay
Hinditron Services Pvt. Ltd.
Tel: 811316, 815344
TLX: 953-112326 HSPL IN

India, Bangalore
Hinditron Services Pvt. Ltd.
Tel: 33139
TLX: 0845741

India, New Delhi
Hinditron Services Pvt. Ltd
Tel: 619118
TLX: 031 4890 SRMP IN

Indonesia, Jakarta Selatan
P.T. Dwi Tunggal Jaya Sakti
Tel: 716374
TLX: 47308 DIJS IA

Israel, Ramat Hasharon
R.D.T. Electronics Engineering Ltd.
Tel: (03) 483216
TLX: 32143

Italy, Milan
Sistrel S.p.A.
Tel: (02) 6181893
TLX: 334643

Italy, Rome
Sistrel S.p.A.
Tel: (06) 5915551
TLX: 68356

Japan, Tokyo
John Fluke Mfg. Co., Inc.
Japan Branch
Tel: (03) 434-0181
TLX: (781) 2424331 (FLUKJPJ)

Korea, Seoul
Electro-Science Korea Co.
Tel: 261-7702, 260-1908
TLX: K25381

Malaysia, Petaling Jaya
Mecomb Malaysia SDN BHD
Tel: 573455
TLX: MA37605

Mexico, Mexico D.F.
Electronica y Tecnologia Avanzada S.A. de C.V. (ETA)
Tel: 393 09 02 or 393 57 62
TLX: 0172697 BLOSME

Netherlands, Maarssen
Fluke (Nederland) B.V.
Tel: (030) 436514
TLX: 47128

Netherlands, Tilburg
Fluke (Holland) B.V.
Tel: (013) 673973
TLX: 52237

New Zealand, Auckland
McLean Information Technology, Ltd.
Tel: 501-801, 501-219, 587-037
TLX: NZ21570 THERMAL

Norway, Oslo
Morgenstierne & Co A/S
Tel: (02) 356110
TLX: 71719

Pakistan, Karachi
Pak International Operations
Tel: 221127, 239052
TLX: 24494 PIO PK

Peru, Lima
Importaciones Y Representaciones Electronicas S.A.
Tel: 288650
TLX: 37425663

Philippines, Metro Manila
Spark Radio & Electronics Corp.
Tel: 78-78-16
TLX: 27901 RLA PH

Portugal, Lisboa
Decada-Equipamentos de Electronica, Lda
Tel: (19) 574984
TLX: 18469

Republic of Singapore, Singapore
Rank O'Connor's (PTE) Limited
Tel: 637944, 239052
TLX: OCONSIN RS21023

Republic of South Africa, Bramley
Fluke S.A. (Pty) Ltd.
Tel: (011) 786-3170
TLX: 424328

Spain, Alcorcon (Madrid)
Hispano Electronics S.A.
Tel: (01) 6194108
TLX: 22404/42634

Sweden, Vallingby
Teleinstrument AB
Tel: (08) 380370
TLX: 15770

Switzerland, Zurich
Traco Electronic AG
Tel: (01) 2010711
TLX: 54318

Taiwan, Taipei
Schmidt Scientific Far East Ltd
Tel: 5414600
TLX: 11111 Schmidt

Thailand, Bangkok
Measuretronix Ltd.
Tel: 3143369, 3143430
TLX: 81143 DEJOBKK TH

Turkey, Istanbul
Erkman Elektronik Aletler
Tel: (01) 5461
TLX: 23353

Uruguay, Montevideo
Coasin Uruguaya S.R.L.
Tel: 29-31-952
TLX: UY 6571 OROCUER

Venezuela, Caracas
Coasin, C.A.
Tel: 38-78-42, 38-78-86
TLX: 21027 EMVEN VE

West Germany, Ismaning
Fluke (Deutschland) GmbH
Tel: (089) 96050
TLX: 0522472

FLUKE®
John Fluke Mfg. Co., Inc., P.O. Box C9090, Everett, WA 98206
Fluke (Holland) B.V., P.O. Box 5053, 5004 EB, Tilburg, The Netherlands. Phone (013) 673973
Litho in U.S.A. 1/83

Section 8

Schematic Diagrams

FIGURE NO.	NAME	DRAWING NO.	PAGE
8-1	Main PCB Assembly (1 of 3)	1900A–1001	8-3
8-1	Main PCB Assembly (2 of 3)	1900A–1001	8-4
8-1	Main PCB Assembly (3 of 3)	1900A–1001	8-5
8-2	Input PCB Assembly	1900A–1003	8-6
8-3	Display PCB Assembly	1900A–1002	8-7
8-4	DOU PCB Assembly	1900A–1005	8-8

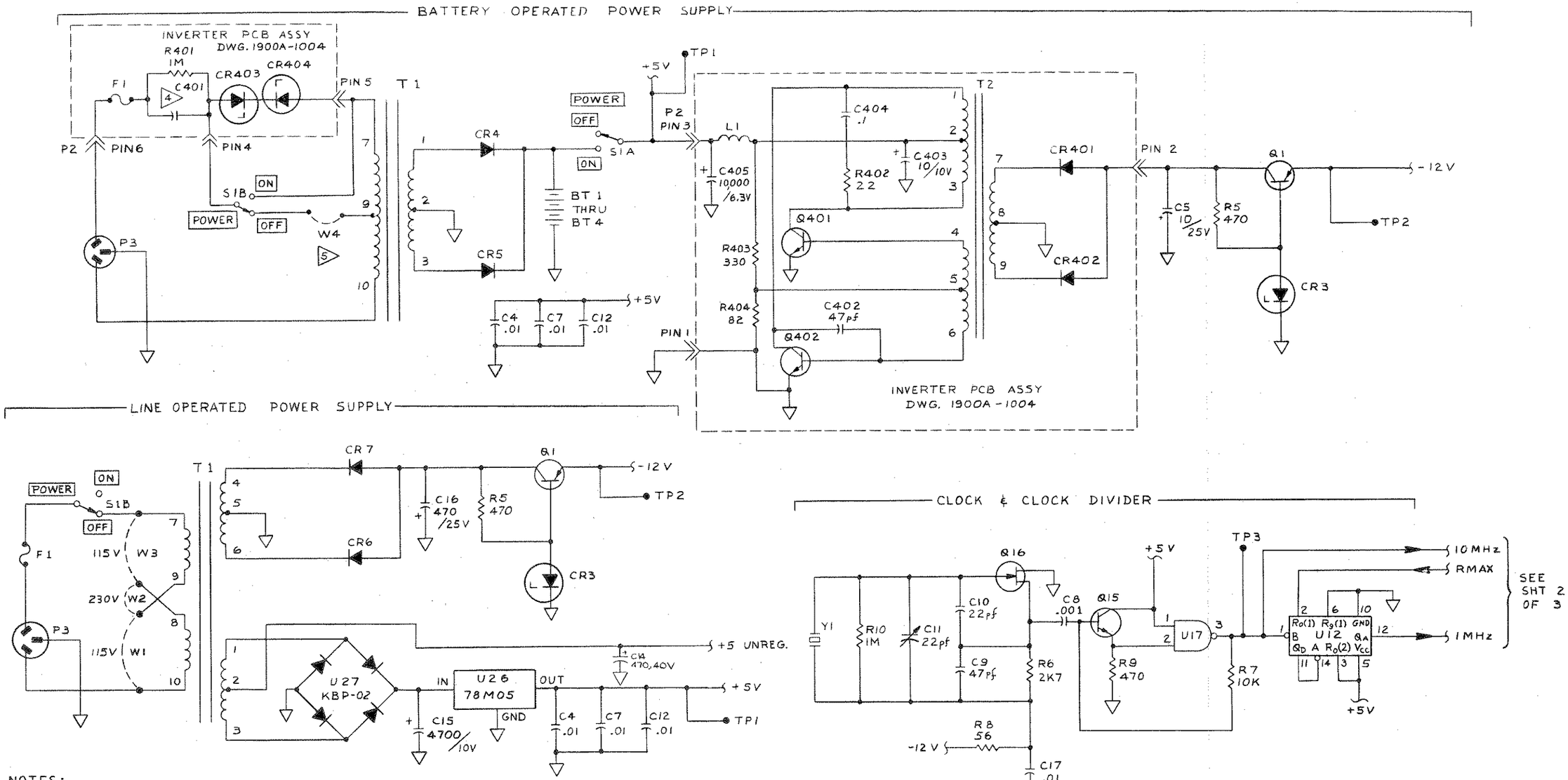

NOTES:

1. ALL RESISTORS ARE IN OHMS, 1/4 W, 5% C.C. UNLESS OTHERWISE NOTED.
2. ALL CAPACITORS ARE IN MICROFARADS, UNLESS OTHERWISE NOTED.
3. ALL SWITCHES ARE IN RELEASE POSITION.

4. 5µf/115VAC FOR 115V/60Hz; 2.8µf/230VAC FOR 230V/50Hz; 8µf/100VAC FOR 100V/50Hz
5. SHORT W4 FOR BATTERY CONFIGURATION
6. IN LINE CONFIGURATION, SHORT W2 FOR 230V, SHORT W1 & W3 FOR 115V.

FIGURE 8-1. (1 of 3) MAIN PCB ASSEMBLY (1900A–1001)

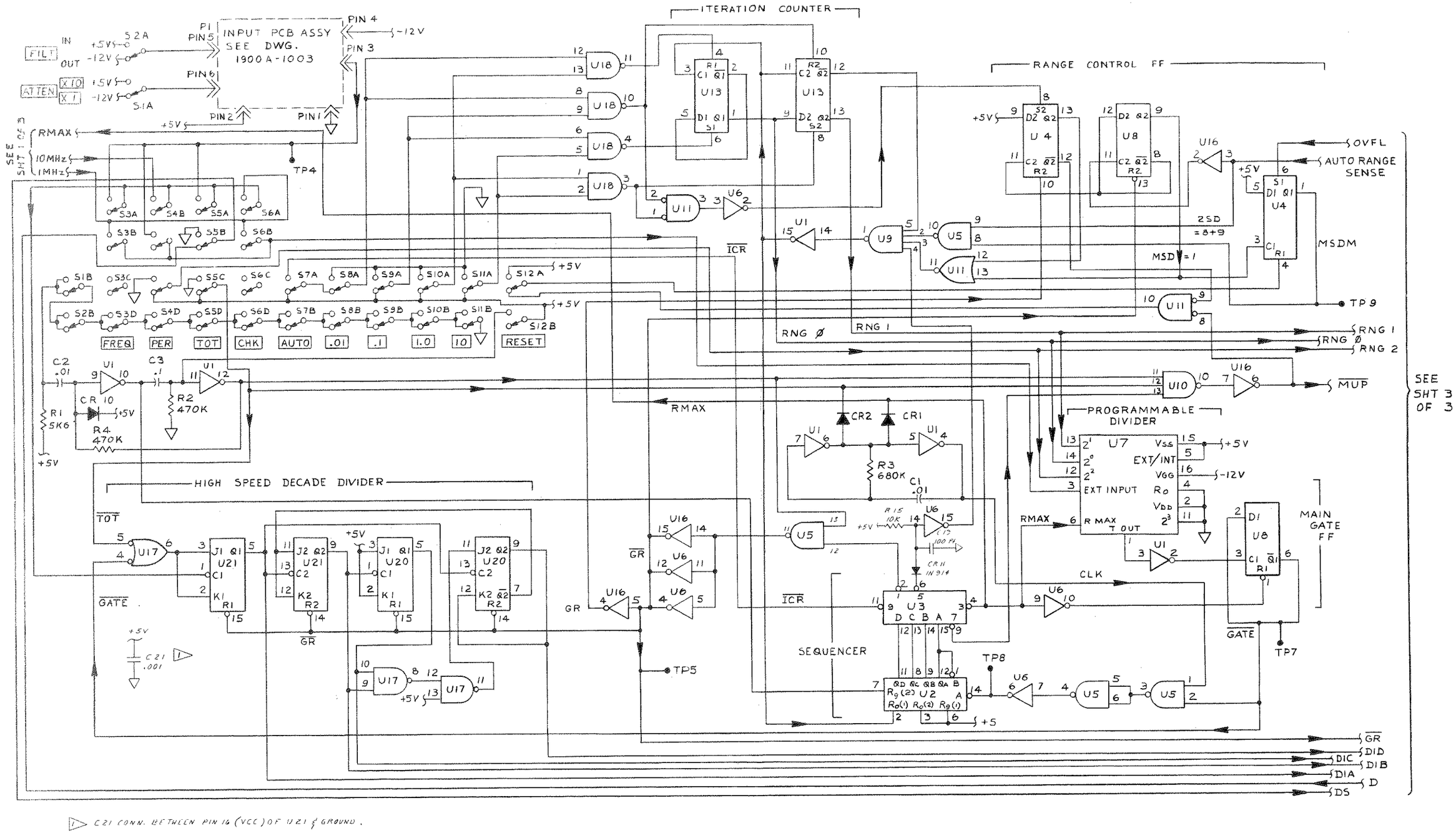

1 C21 CONN. BETWEEN PIN 16 (VCC) OF U21 & GROUND.

FIGURE 8-1. (2 of 3) MAIN PCB ASSEMBLY (1900A–1001)

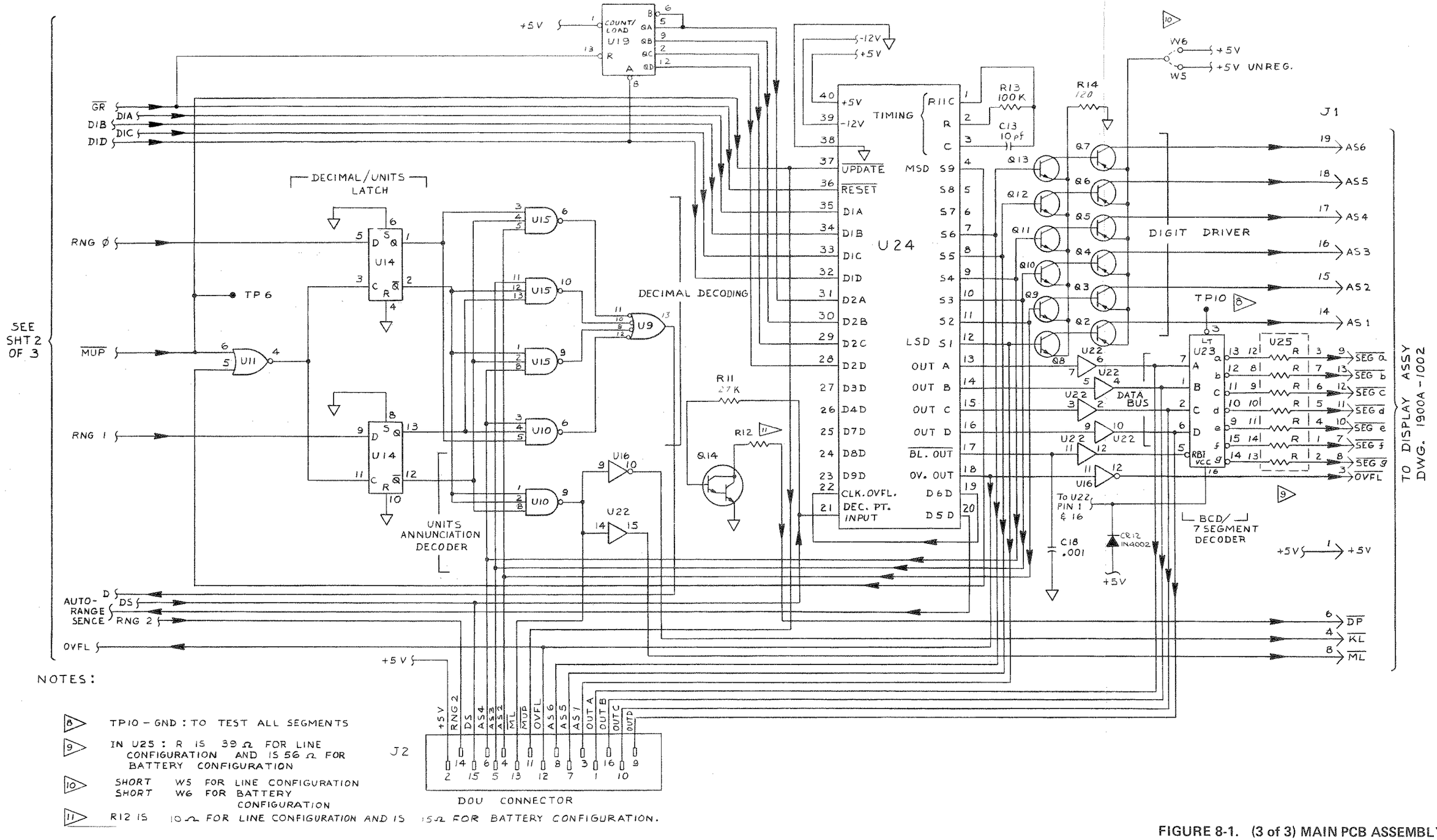

NOTES:

8 TP10 – GND : TO TEST ALL SEGMENTS

9 IN U25 : R IS 39 Ω FOR LINE CONFIGURATION AND IS 56 Ω FOR BATTERY CONFIGURATION

10 SHORT W5 FOR LINE CONFIGURATION
SHORT W6 FOR BATTERY CONFIGURATION

11 R12 IS 10 Ω FOR LINE CONFIGURATION AND IS 15 Ω FOR BATTERY CONFIGURATION.

FIGURE 8-1. (3 of 3) MAIN PCB ASSEMBLY (1900A–1001)

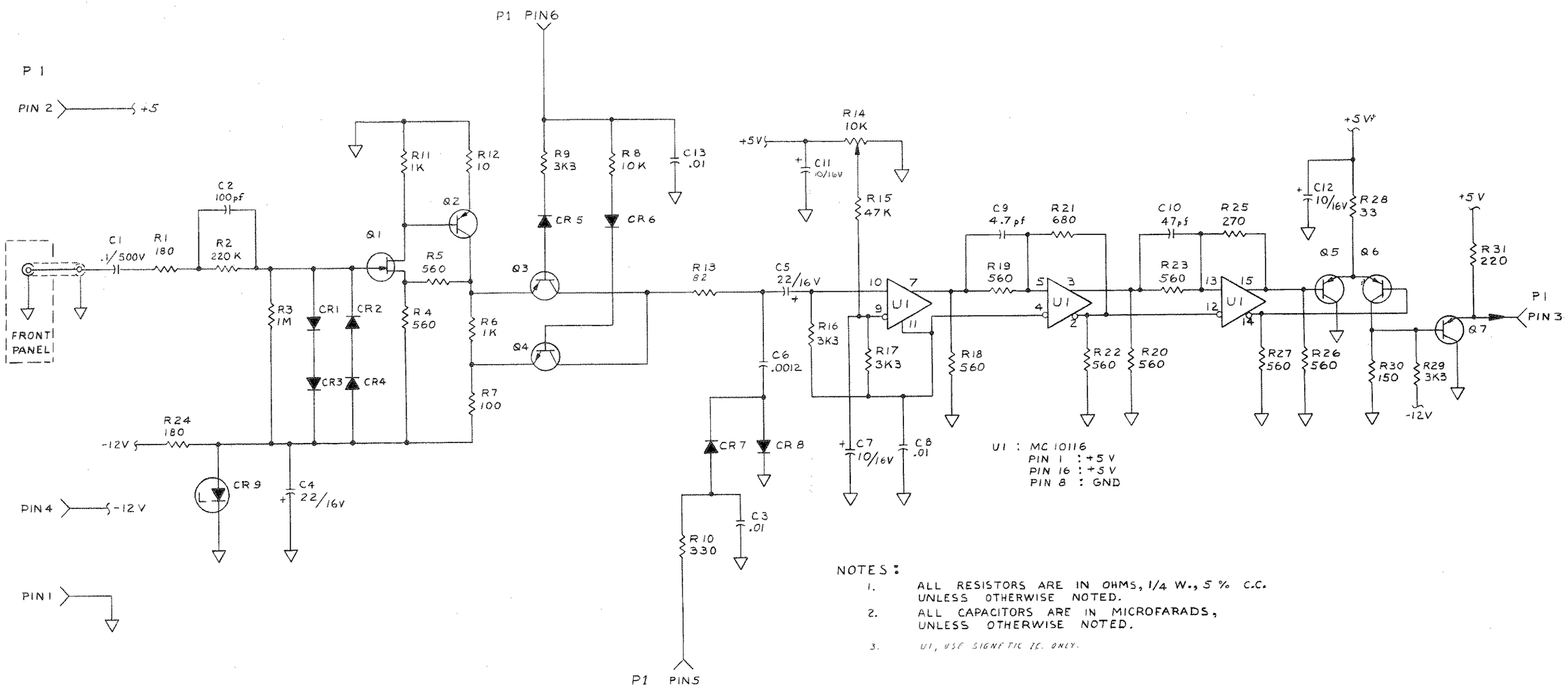

NOTES:

1. ALL RESISTORS ARE IN OHMS, 1/4 W., 5 % C.C. UNLESS OTHERWISE NOTED.
2. ALL CAPACITORS ARE IN MICROFARADS, UNLESS OTHERWISE NOTED.
3. U1, USE SIGNETIC IC. ONLY.

FIGURE 8-2. INPUT PCB ASSEMBLY (1900A–1003)

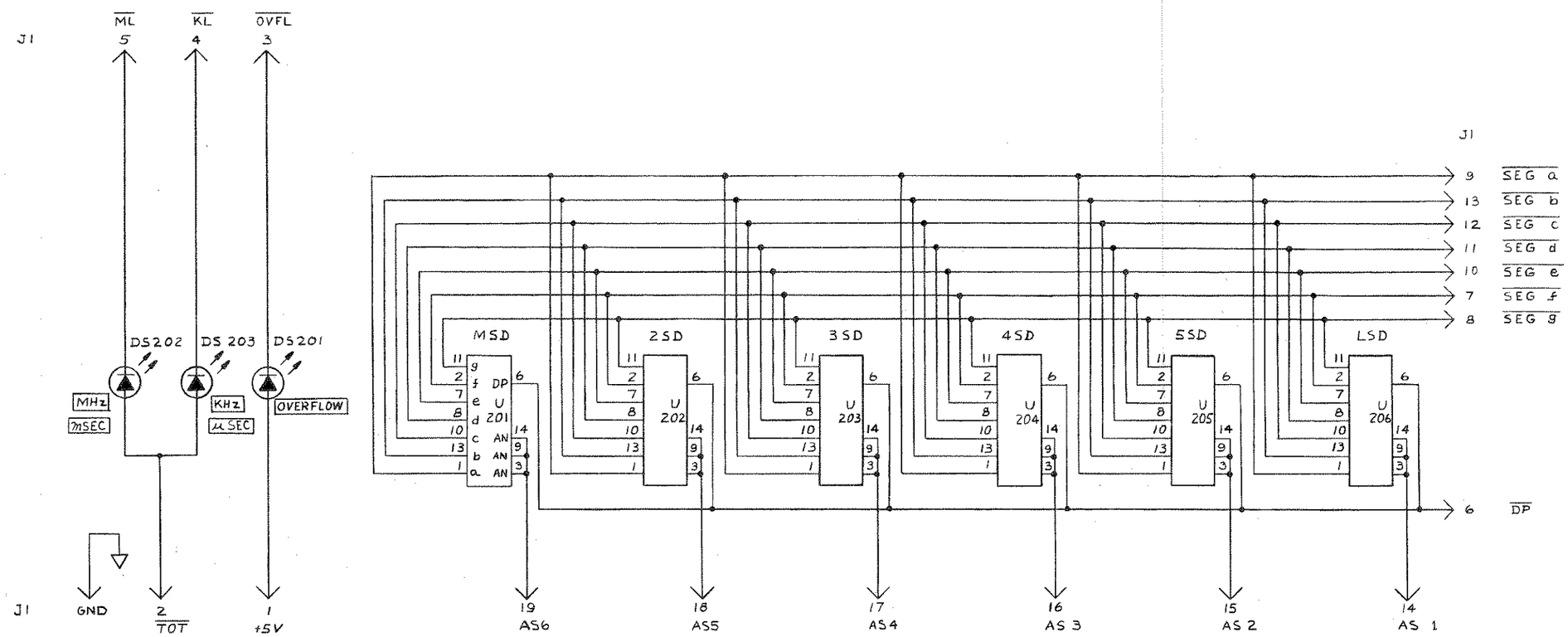

NOTE :

1. U201 THRU U206 CONTAIN A SEVEN SEGMENT LED DISPLAY

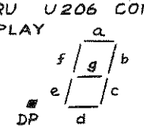

FIGURE 8-3. DISPLAY PCB ASSEMBLY (1900A–1002)

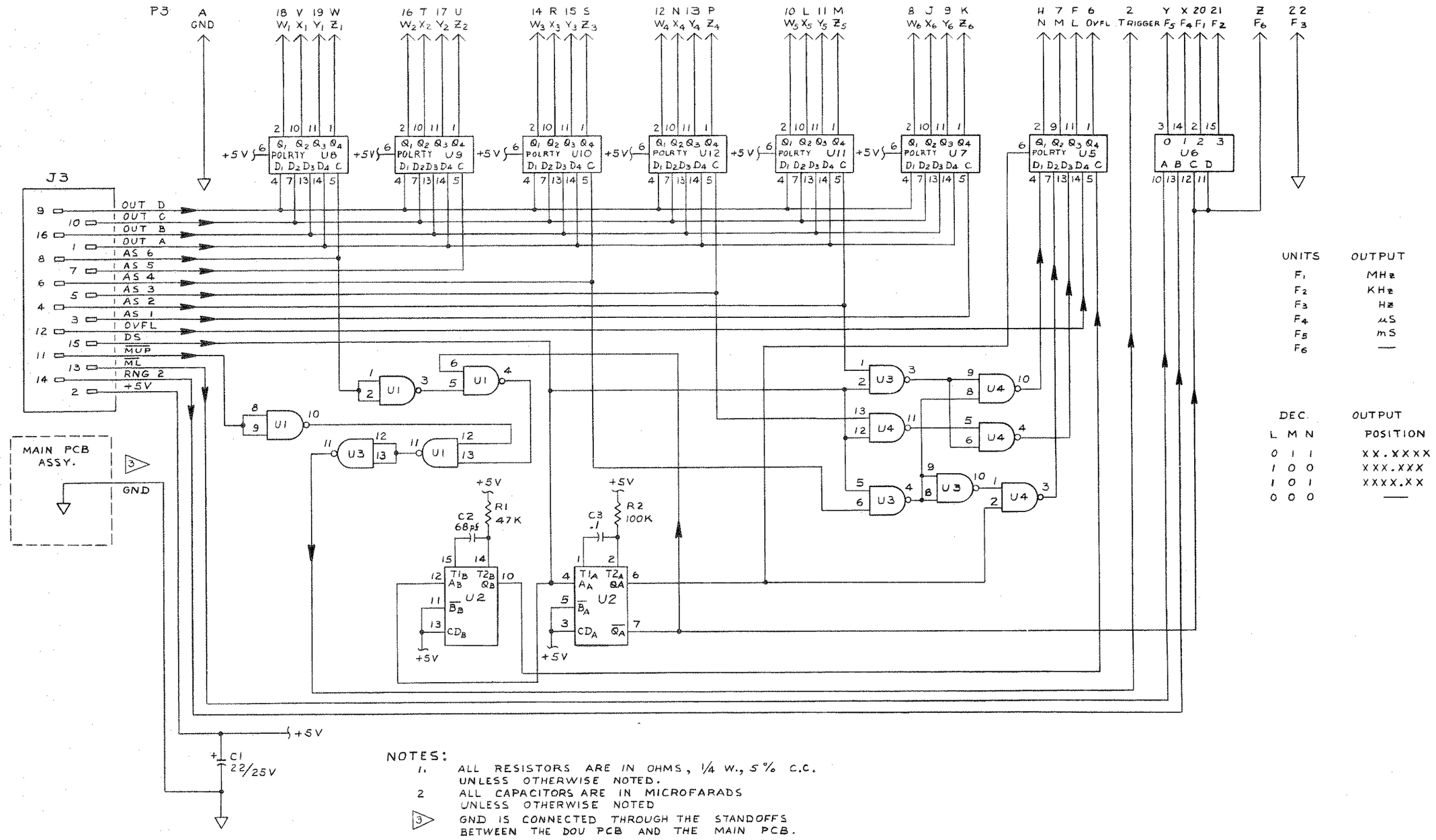

NOTES:

1. ALL RESISTORS ARE IN OHMS, 1/4 W., 5% C.C. UNLESS OTHERWISE NOTED.
2. ALL CAPACITORS ARE IN MICROFARADS UNLESS OTHERWISE NOTED
3. GND IS CONNECTED THROUGH THE STANDOFFS BETWEEN THE DOU PCB AND THE MAIN PCB.

FIGURE 8-4. DOU PCB ASSEMBLY (1900A–1005)