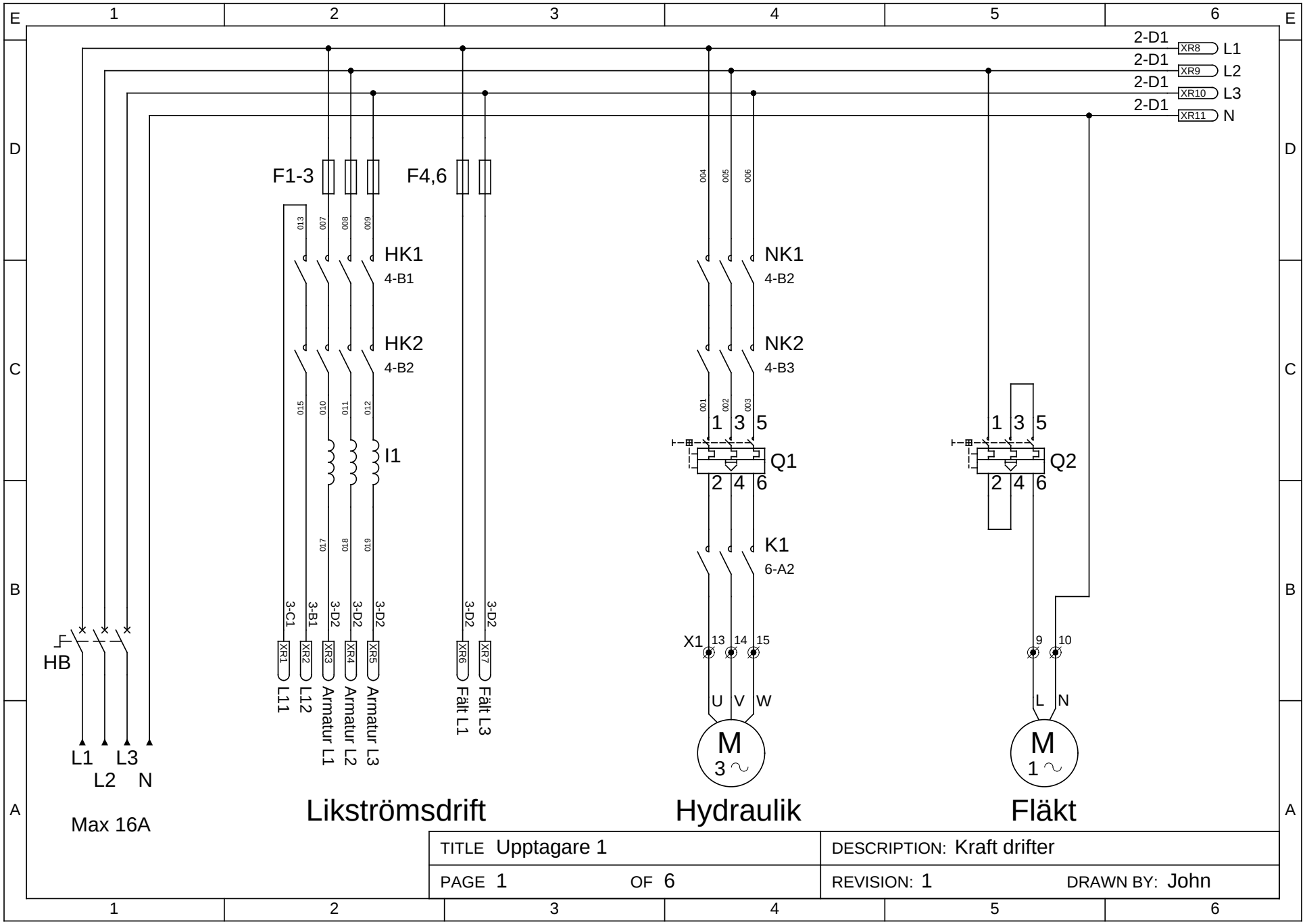

TITLE Upptagare 1	DESCRIPTION: Kraft drifter
PAGE 1 OF 6	REVISION: 1 DRAWN BY: John

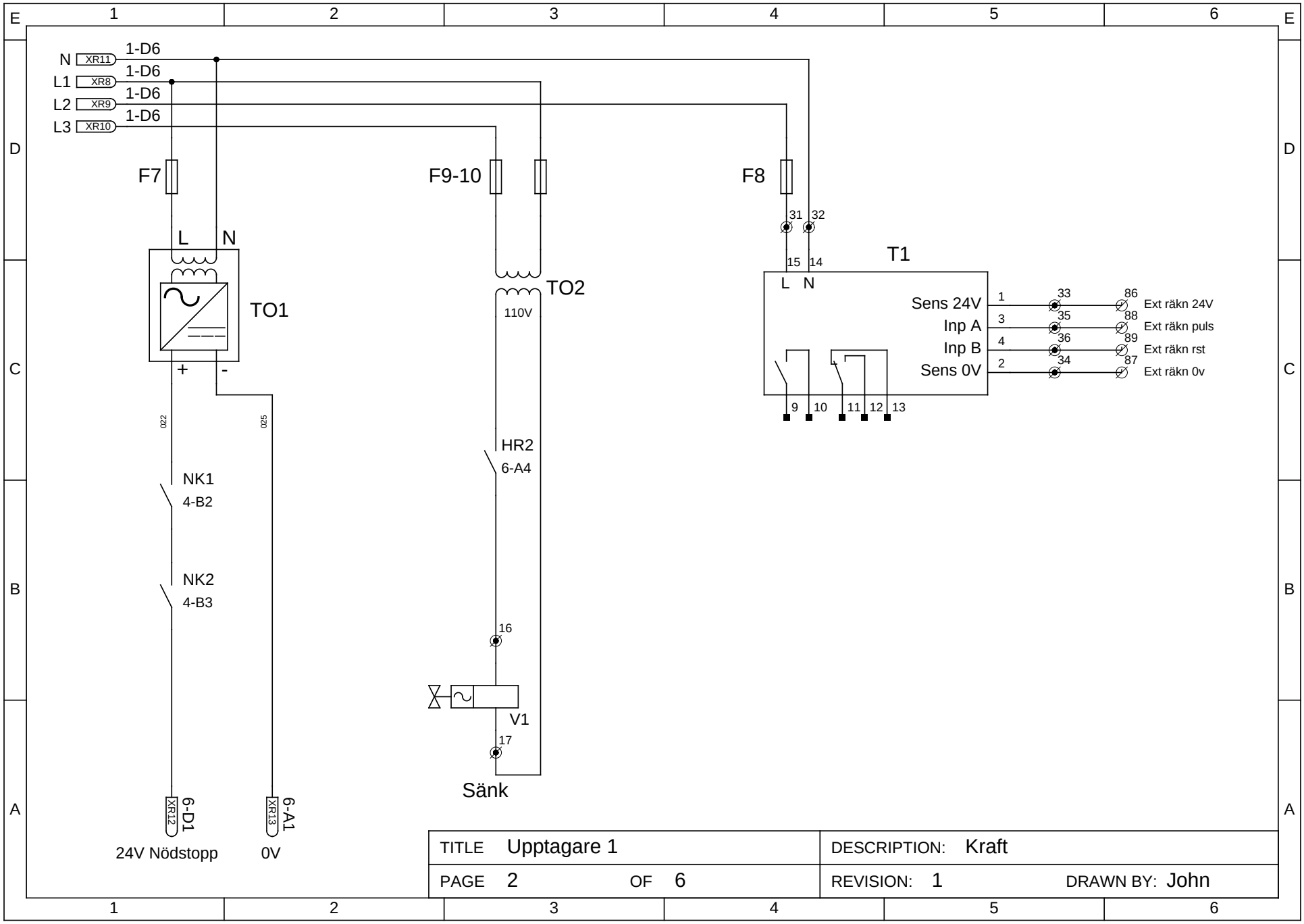
N XR11 1-D6
L1 XR8 1-D6
L2 XR9 1-D6
L3 XR10 1-D6
F7
F9-10
F8
L N
TO1
+ -
022
025
NK1
4-B2
NK2
4-B3
6-D1
XR12
6-A1
XR13
24V Nödstopp
0V
TO2
110V
HR2
6-A4
16
V1
17
Sänk
31 32
15 14
T1
L N
Sens 24V
Inp A
Inp B
Sens 0V
1 3 4 2
33 35 36 34
86 88 89 87
Ext räkn 24V
Ext räkn puls
Ext räkn rst
Ext räkn 0v
9 10 11 12 13
TITLE Upptagare 1
DESCRIPTION: Kraft
PAGE 2 OF 6
REVISION: 1
DRAWN BY: John

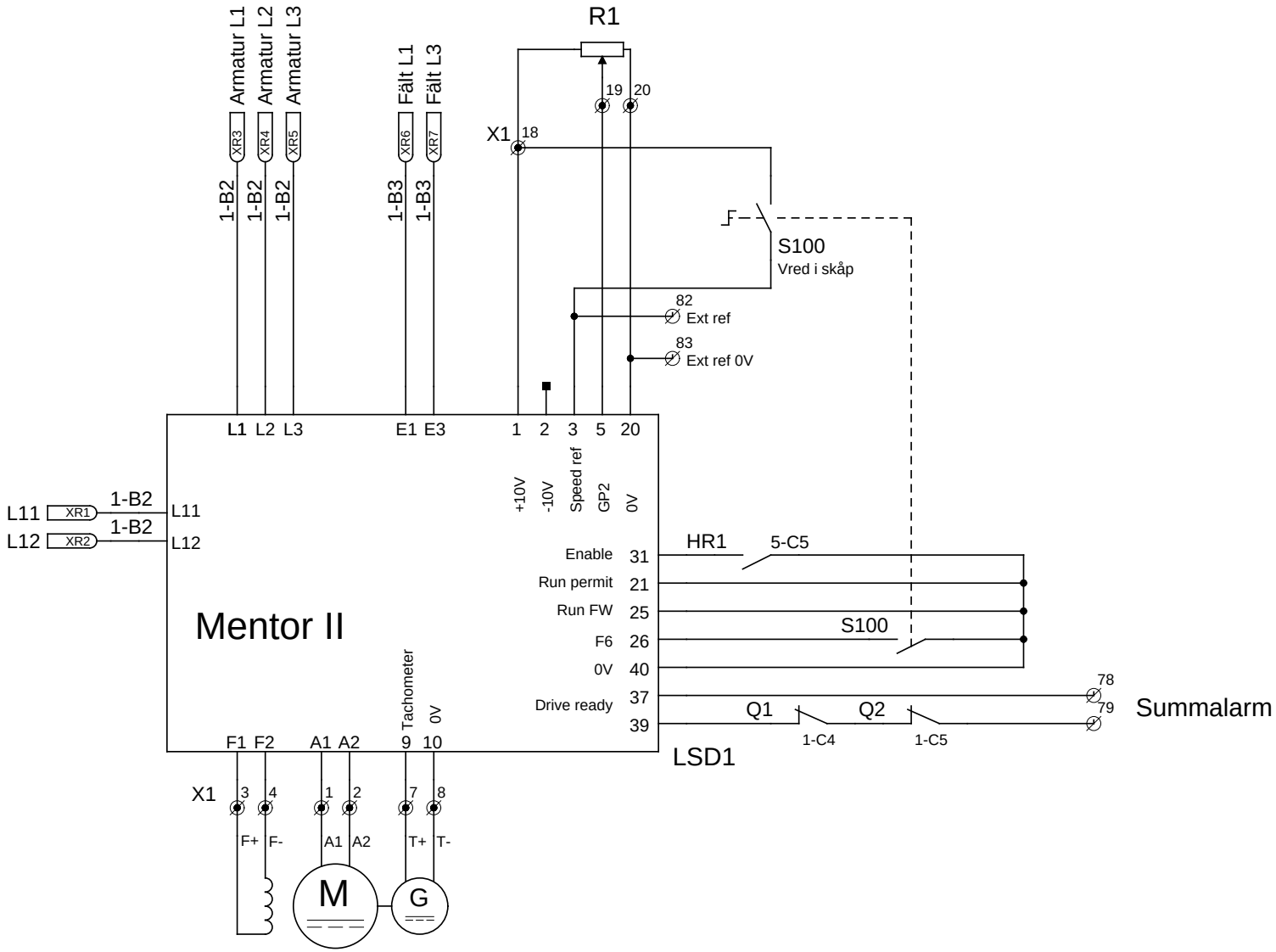

TITLE Upptagare 1	DESCRIPTION: Likströmsdrift
PAGE 3 OF 6	REVISION: 1 DRAWN BY: John

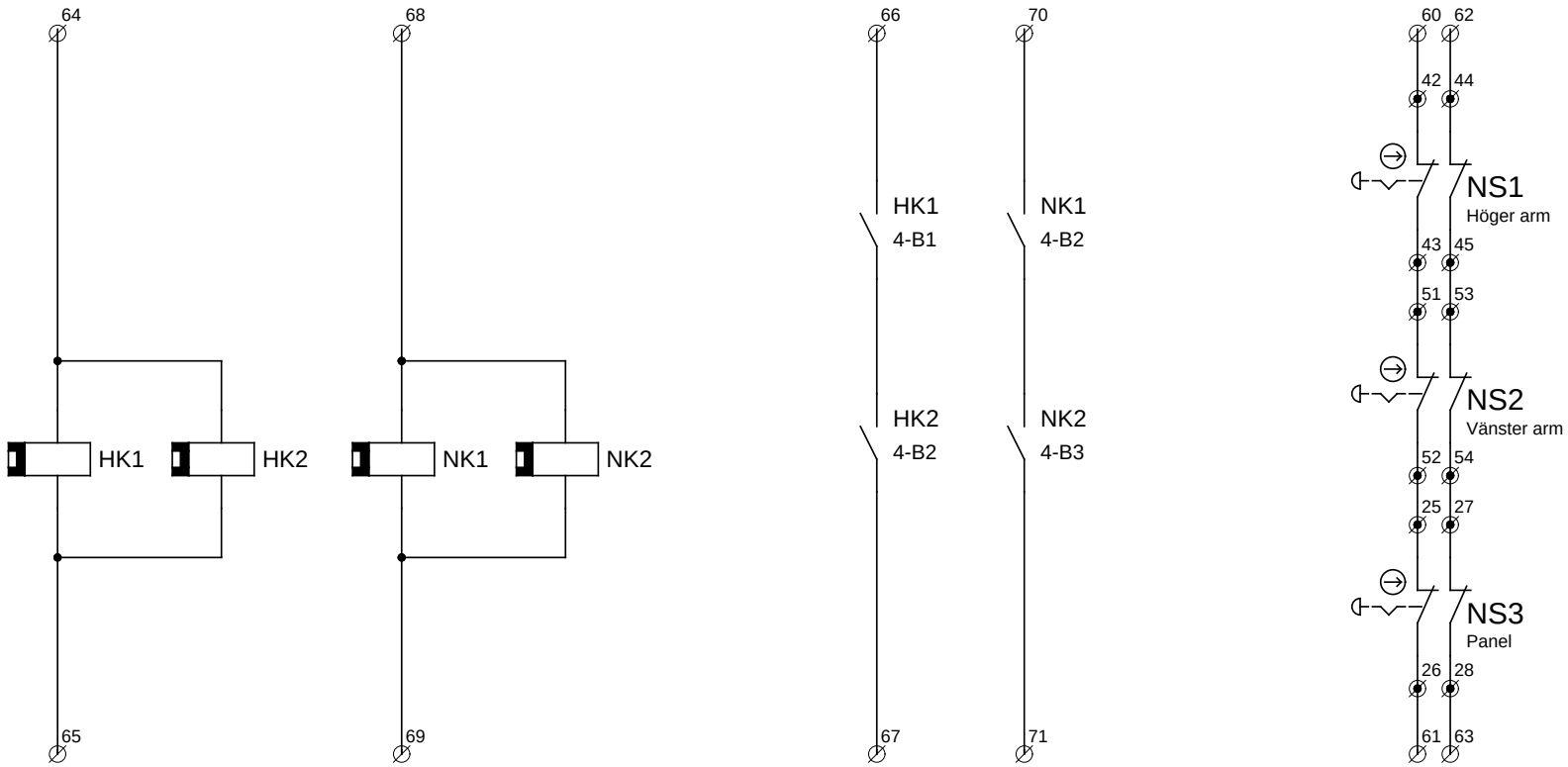

TITLE Upptagare 1	DESCRIPTION: Säkerhet
PAGE 4 OF 6	REVISION: 1 DRAWN BY: John

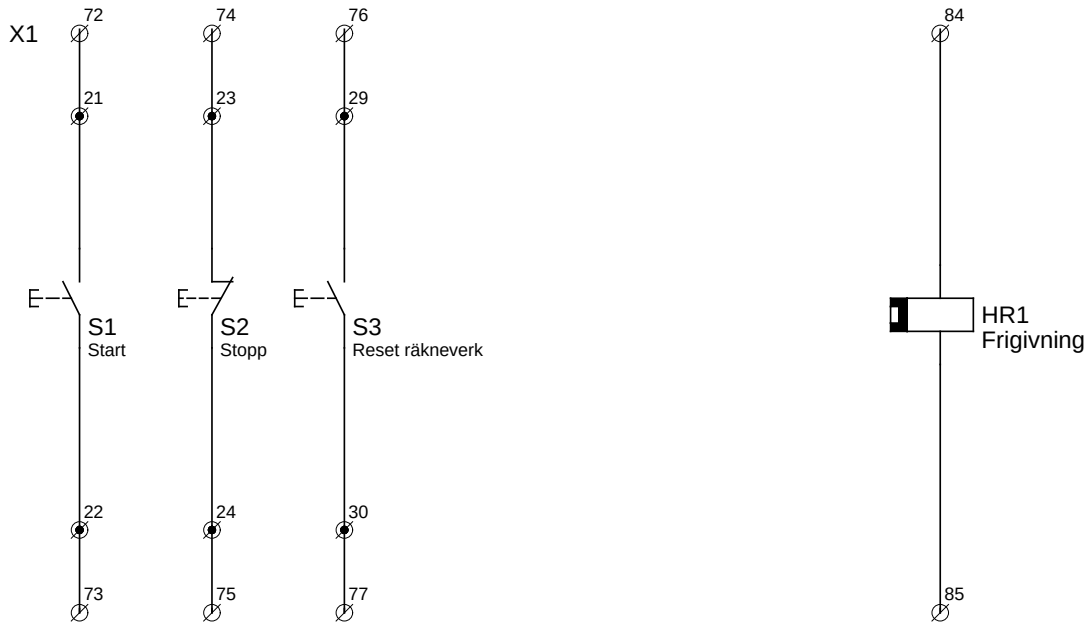

TITLE Upptagare 1	DESCRIPTION: Externa funktioner
PAGE 5 OF 6	REVISION: 1 DRAWN BY: John

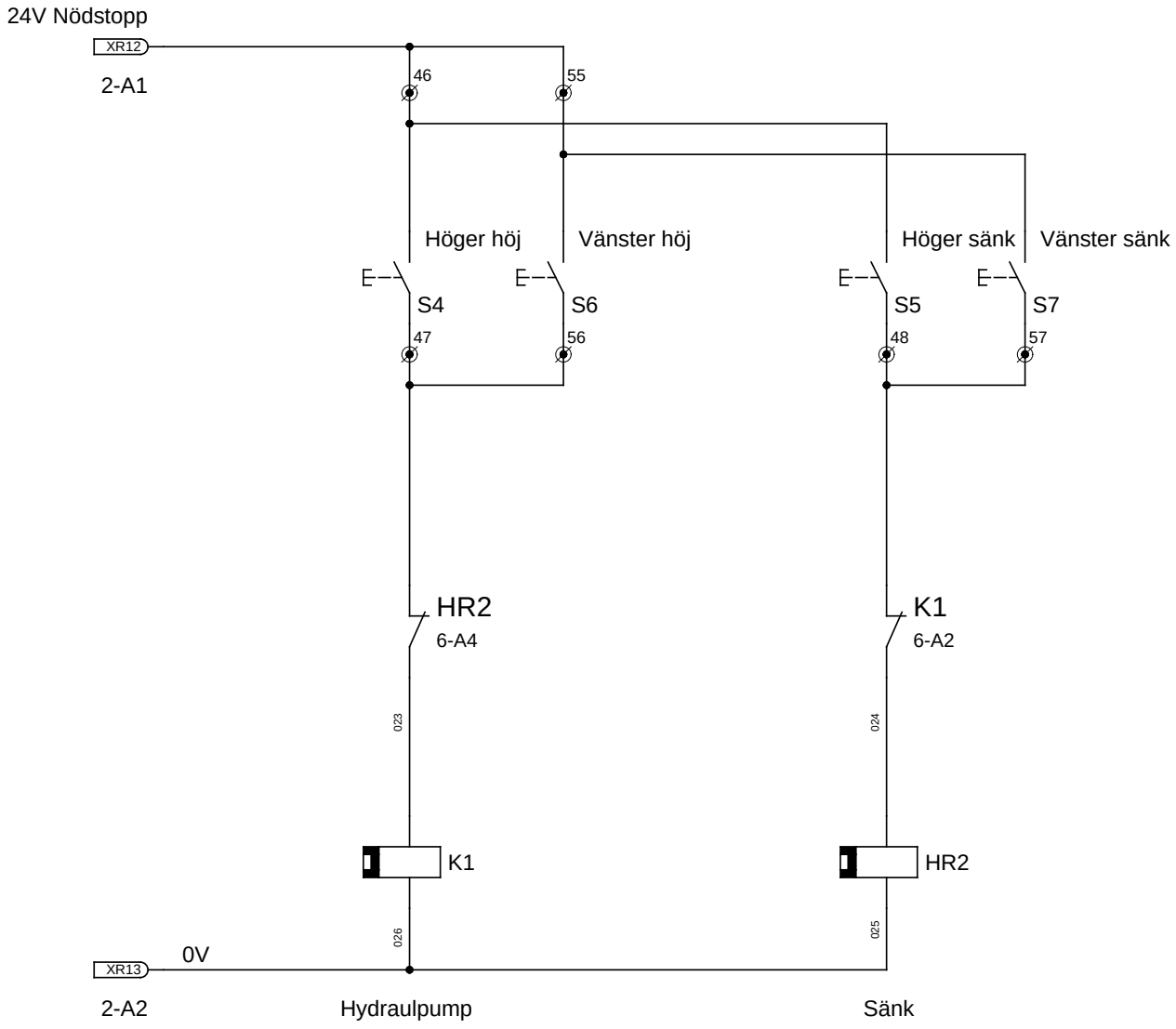

TITLE Upptagare 1	DESCRIPTION: Interna funktioner
PAGE 6 OF 6	REVISION: 1 DRAWN BY: John