Radio Frequency (RF) Analog #2: RF circuit design and measurement techniques

3S24 – Session RA-03a

Bang D. Nhan (Nhan Định Bang)
National Radio Astronomy Observatory (NRAO)
Charlottesville, Virginia, USA
Email: bnhan@nrao.edu

Outline

I. Two-port network
   i. S-parameters
   ii. Gain
   iii. Noise Figure
II. Low-noise amplifier
III. Analog RF Filters (Low, high, bandpass, notch)
IV. RF Circuit simulation
V. Component Datasheet & Design Process

Radio receiver

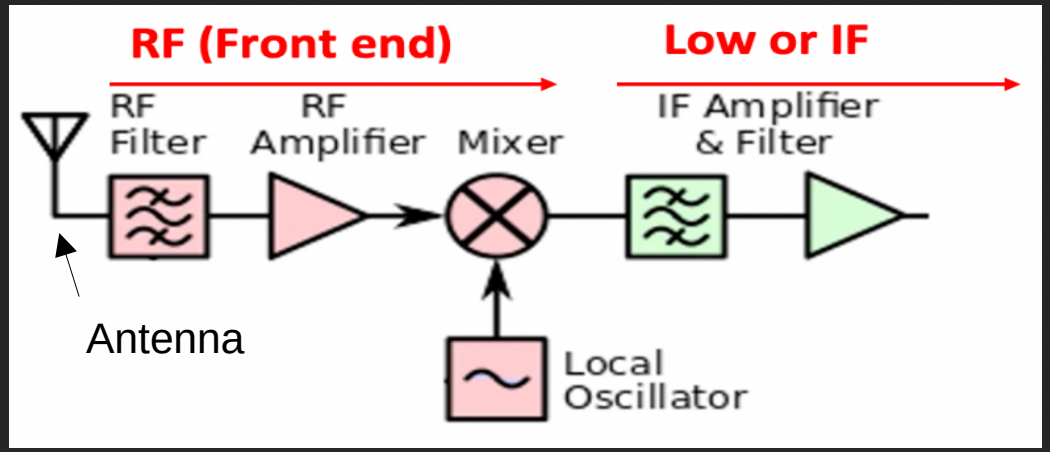

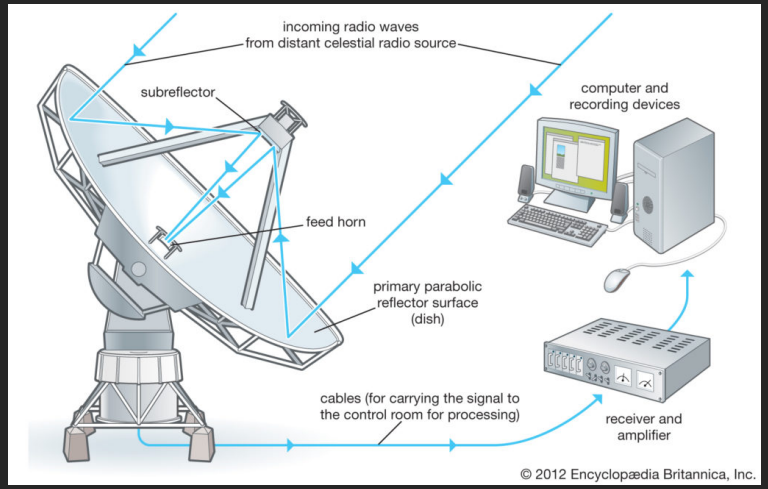

Instrument Design Process

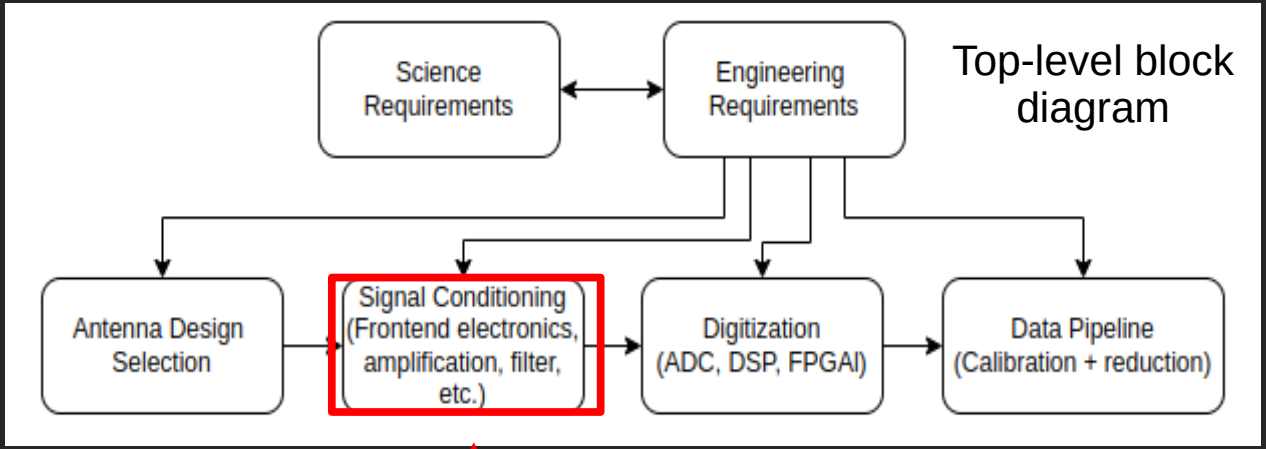

This lecture

Science requirements:

- Frequency range
- Spatial resolution
- Frequency resolution
- Time resolution (how fast to record the data)
- Integration time (reduce noise)

Engineering requirements:

- Frequency range → bandwidth
- Spatial resolution → Beam shape
- Available technology
- Fabrication material cost
- Parts lead time
- Measurement capability/facilities

Two-port network

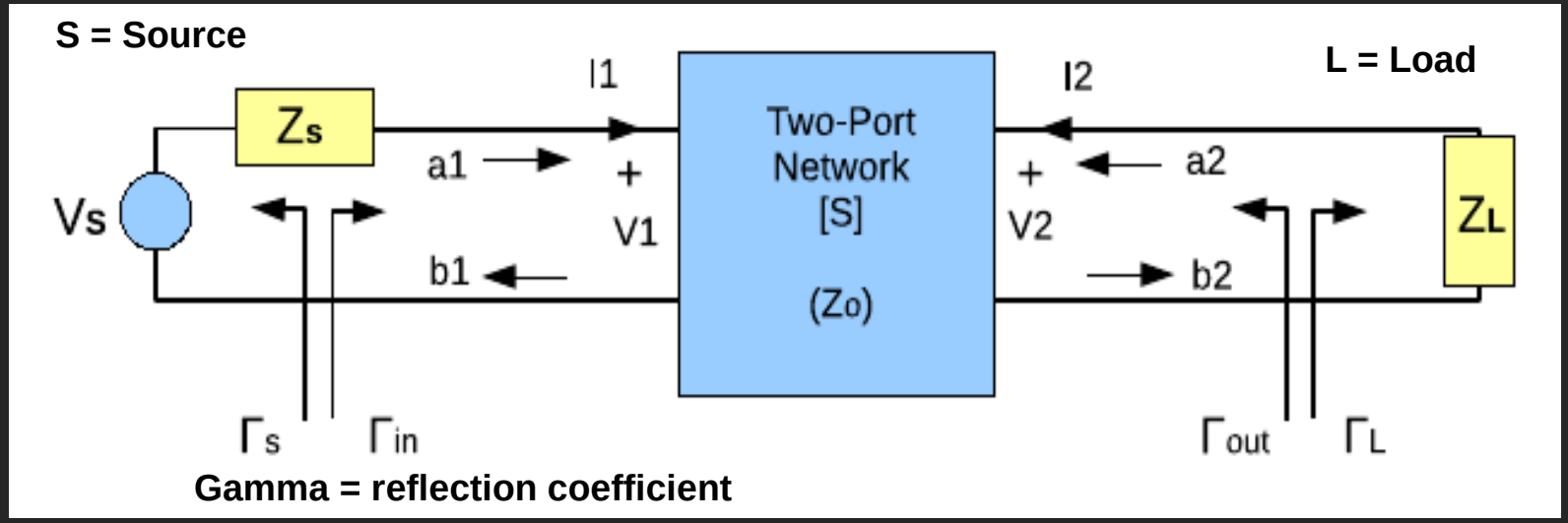

$$\Gamma = \frac{Z - Z_0}{Z + Z_0}$$

Transducer Gain

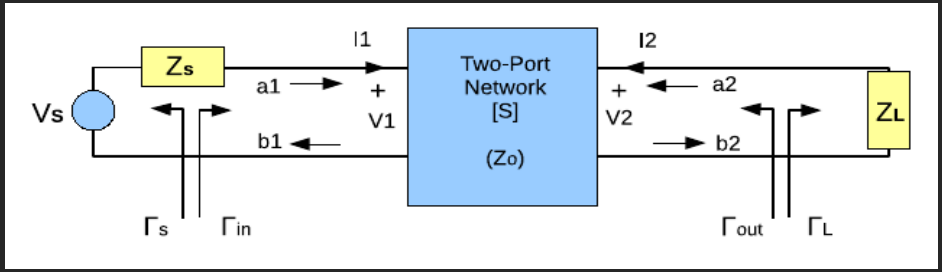

$$\Gamma = \frac{Z - Z_0}{Z + Z_0}$$

Input power

$$P_{in} = \frac{|V_S|^2}{8Z_0}\frac{|1-\Gamma_S|^2}{|1-\Gamma_S\Gamma_{in}|^2}(1-|\Gamma_{in}|^2).$$

Power available from the source
(maximum power can be delivered to the network)

$$P_{AVS} = P_{in}\Big|_{\Gamma_{in}=\Gamma_S^*} = \frac{|V_S|^2}{8Z_0}\frac{|1-\Gamma_S|^2}{(1-|\Gamma_S|^2)}.$$

Power delivered to the load

$$P_L = \frac{|S_{21}|^2}{8Z_0|1-S_{22}\Gamma_L|^2}\frac{(1-|\Gamma_L|^2)(1-|\Gamma_S|^2)}{|1-\Gamma_S\Gamma_{in}|^2}|V_S|^2.$$

Transducer gain

$$G_T = \frac{P_L}{P_{AVS}} = \frac{|S_{21}|^2(1-|\Gamma_L|^2)(1-|\Gamma_S|^2)}{|1-S_{22}\Gamma_L|^2\,|1-\Gamma_S\Gamma_{in}|^2}.$$

S-parameters

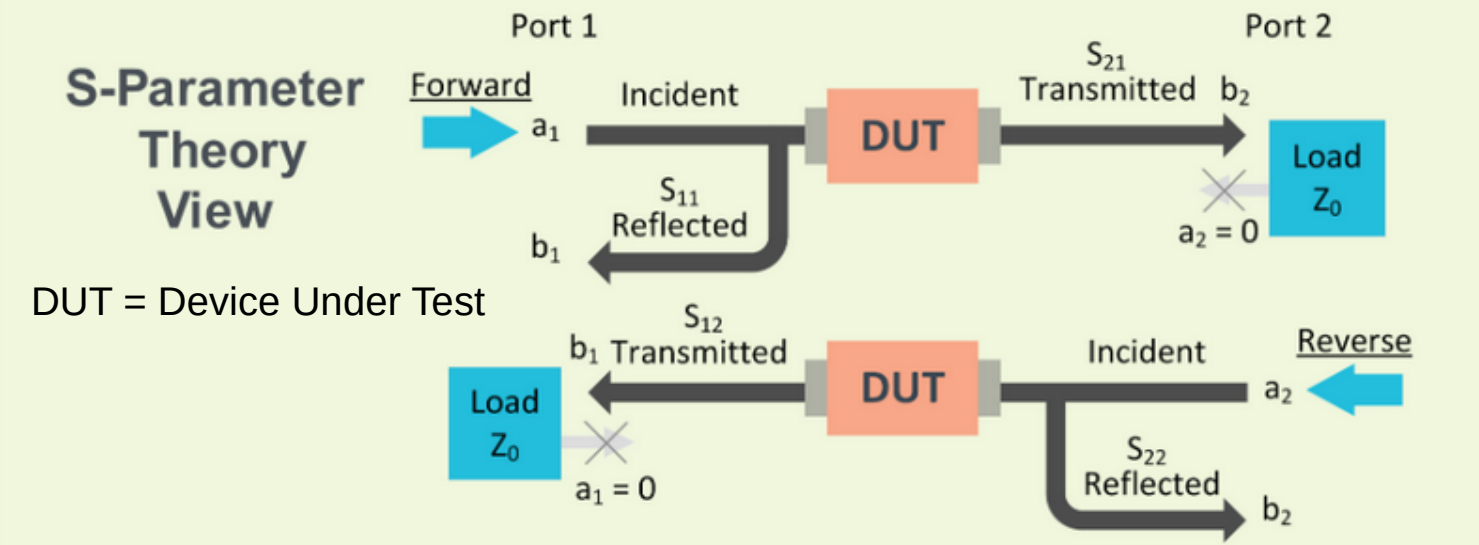

	Forward:	Reverse:
Reflection:	$S_{11} = \frac{\text{Reflected}}{\text{Incident}} = \frac{b_1}{a_1}\Big\vert_{a_2=0}$	$S_{22} = \frac{\text{Reflected}}{\text{Incident}} = \frac{b_2}{a_2}\Big\vert_{a_1=0}$
Transmission:	$S_{21} = \frac{\text{Transmitted}}{\text{Incident}} = \frac{b_2}{a_1}\Big\vert_{a_2=0}$	$S_{12} = \frac{\text{Transmitted}}{\text{Incident}} = \frac{b_1}{a_2}\Big\vert_{a_1=0}$

https://www.tek.com/en/documents/primer/what-vector-network-analyzer-and-how-does-it-work

Rohde Schwarz Tutorial - Understanding S Parameters

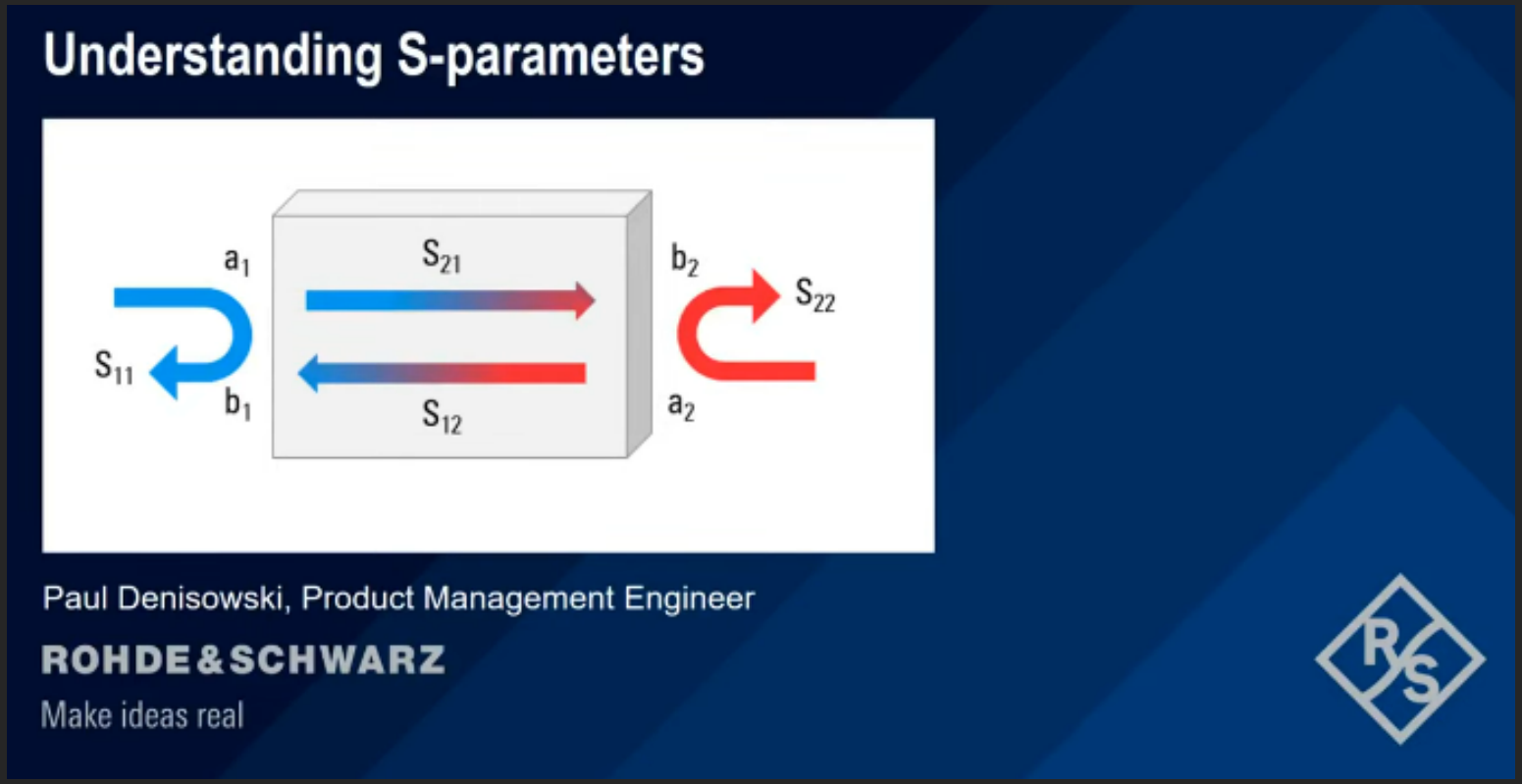

Vector Network Analyzer (VNA)

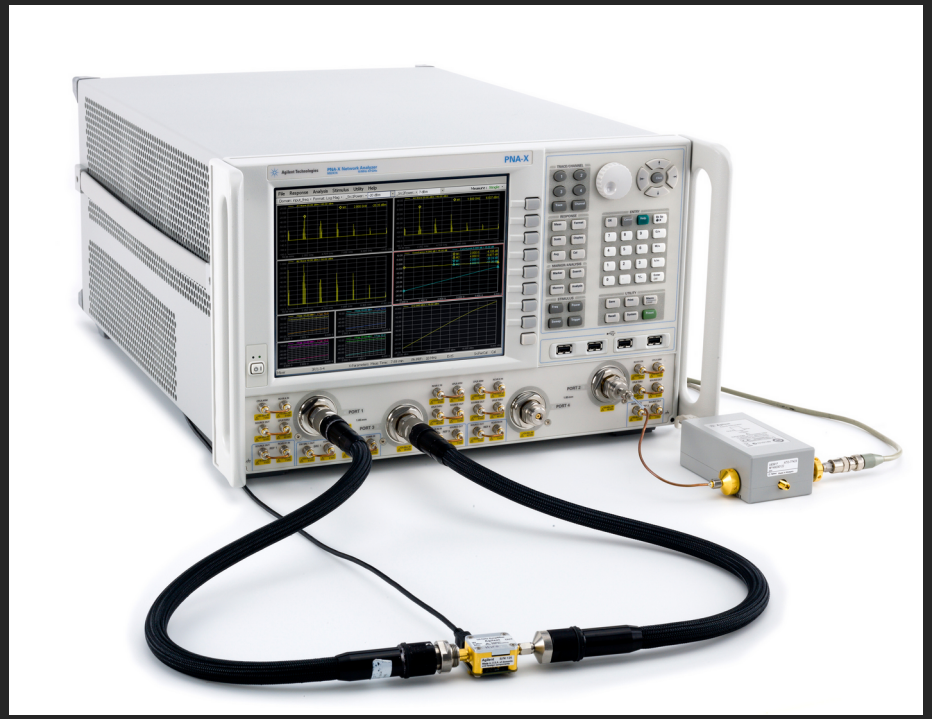

To measure S-parameters

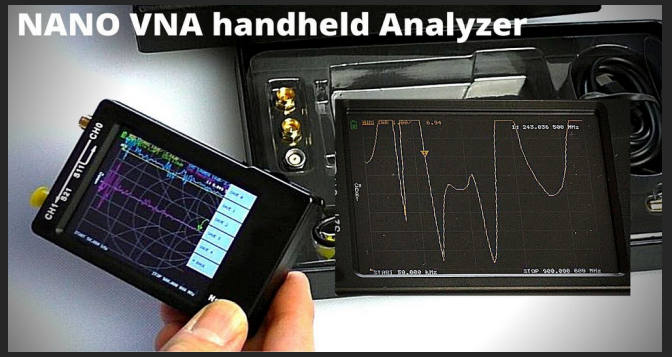

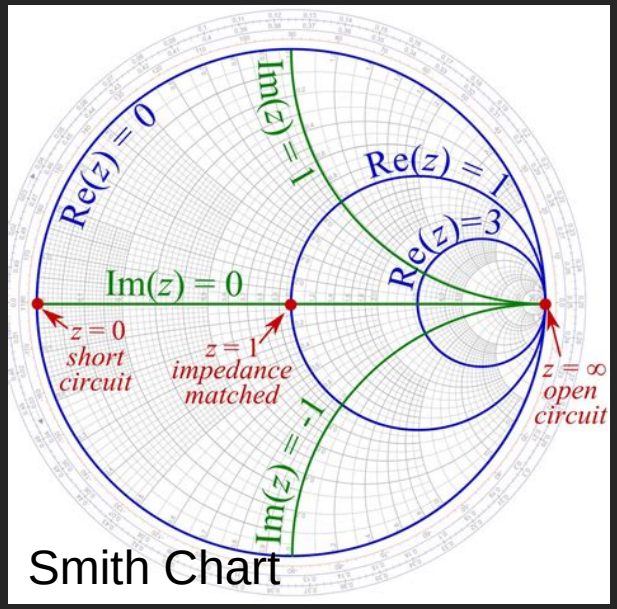

Noise figure & Y-factor method

Rohde Schwarz Tutorial - Understanding Spectrum Analyzers – Noise Figure (Stop at 00:08:00)

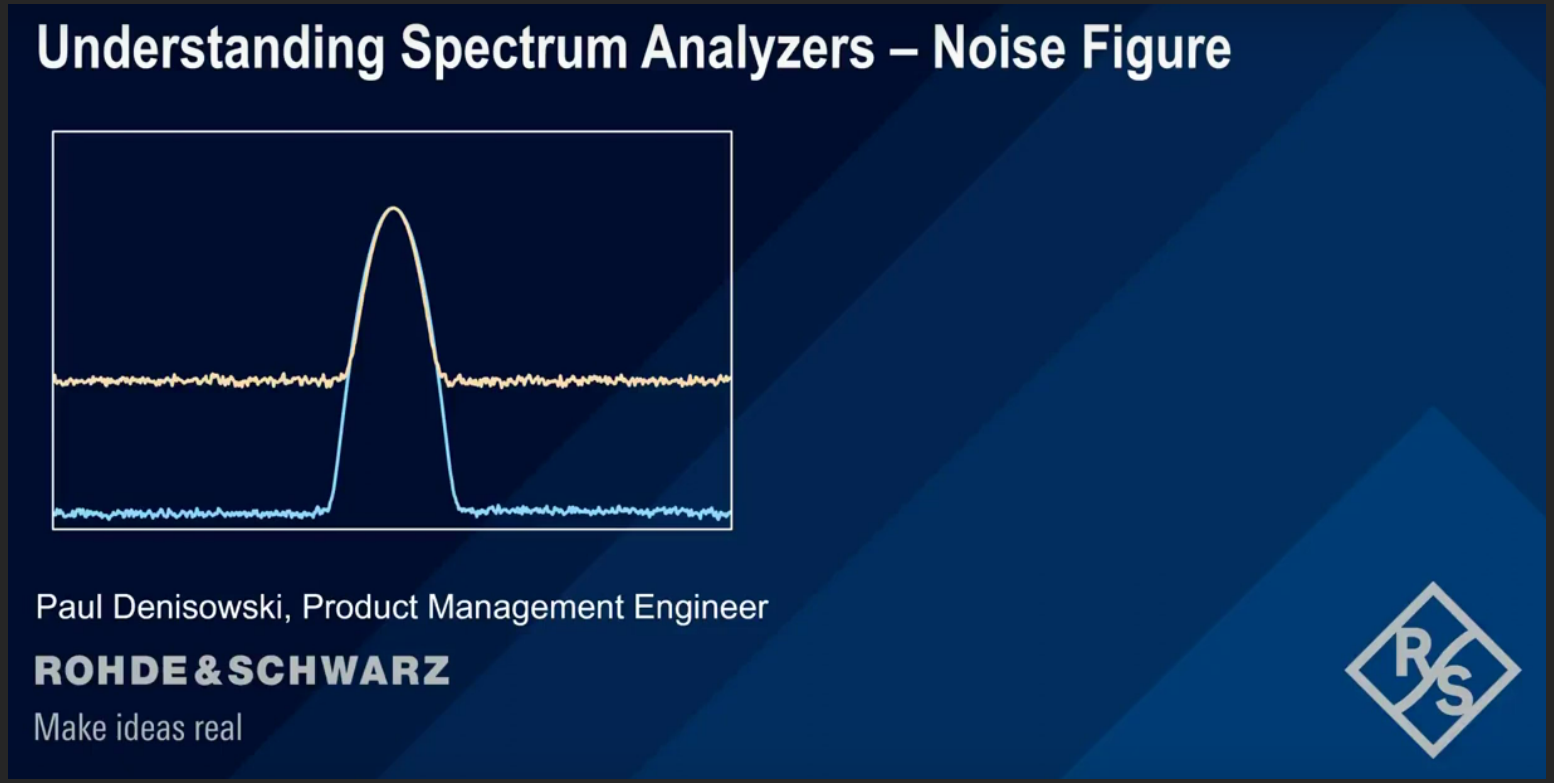

Motivations
Two-port network
Transducer Gain
S-parameters
VNA
Noise Figure
LNA

Low-noise amplifier (LNA)

Low noise amplifies (LNA) fundumentals video

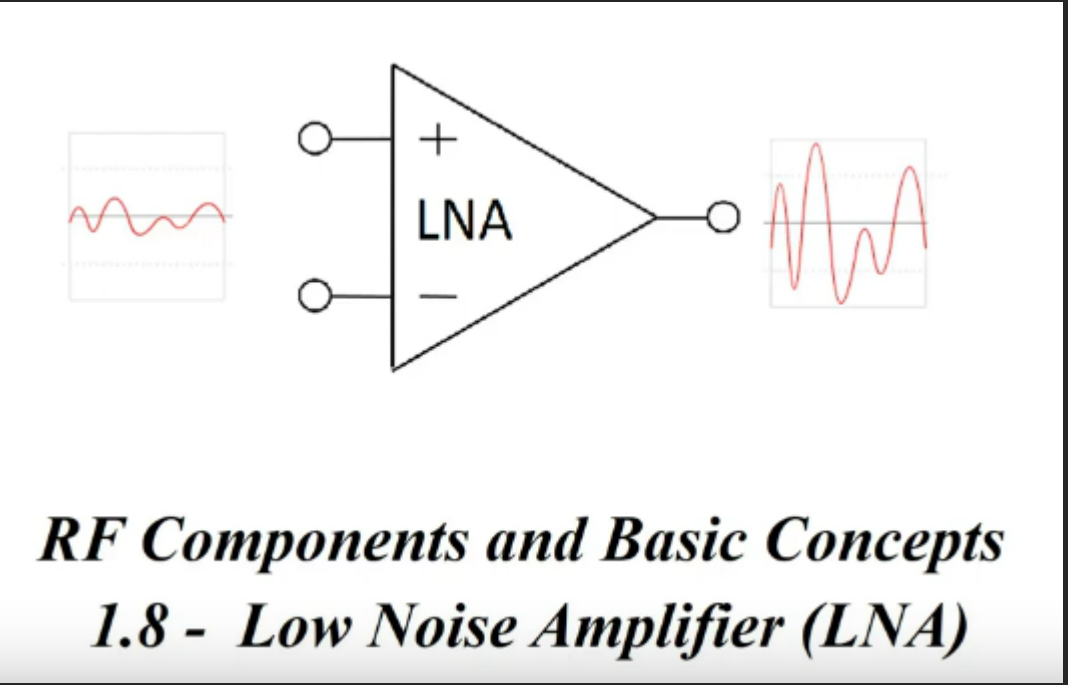

Motivations
Two-port network
Transducer Gain
S-parameters
VNA
Noise Figure
LNA
Frii's formula

Frii's Formula for noise in Cascaded network

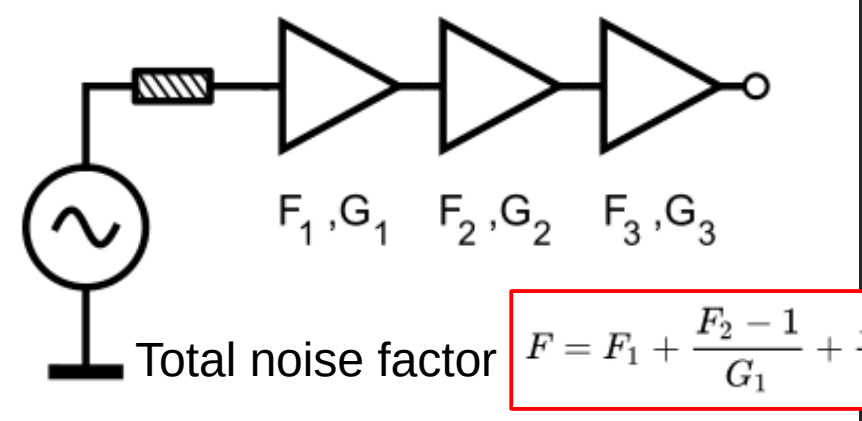

Total noise factor

$$F = F_1 + \frac{F_2 - 1}{G_1} + \frac{F_3 - 1}{G_1 G_2} + \frac{F_4 - 1}{G_1 G_2 G_3} + \cdots + \frac{F_n - 1}{G_1 G_2 G_3 \cdots G_{n-1}},$$

Noise factor

$$F = 1 + \frac{T_e}{T_0}.$$

T_0 = 290 K,
T_e = noise temperature K

Total noise in temperature:

$$T_{eq} = T_1 + \frac{T_2}{G_1} + \frac{T_3}{G_1 G_2} + \cdots$$

First stage of LNA's noise dominates!

$$F_{receiver} = F_{LNA} + \frac{F_{rest} - 1}{G_{LNA}}$$

Ref: https://en.wikipedia.org/wiki/Friis_formulas_for_noise

Motivations
Two-port network
Transducer Gain
S-parameters
VNA
Noise Figure
LNA
Frii's formula
RF Filters

RF/Microwave Filters

Motivations
Two-port network
Transducer Gain
S-parameters
VNA
Noise Figure
LNA
Frii's formula
RF Filters
Butterworth

Butterworth Low-pass Filter

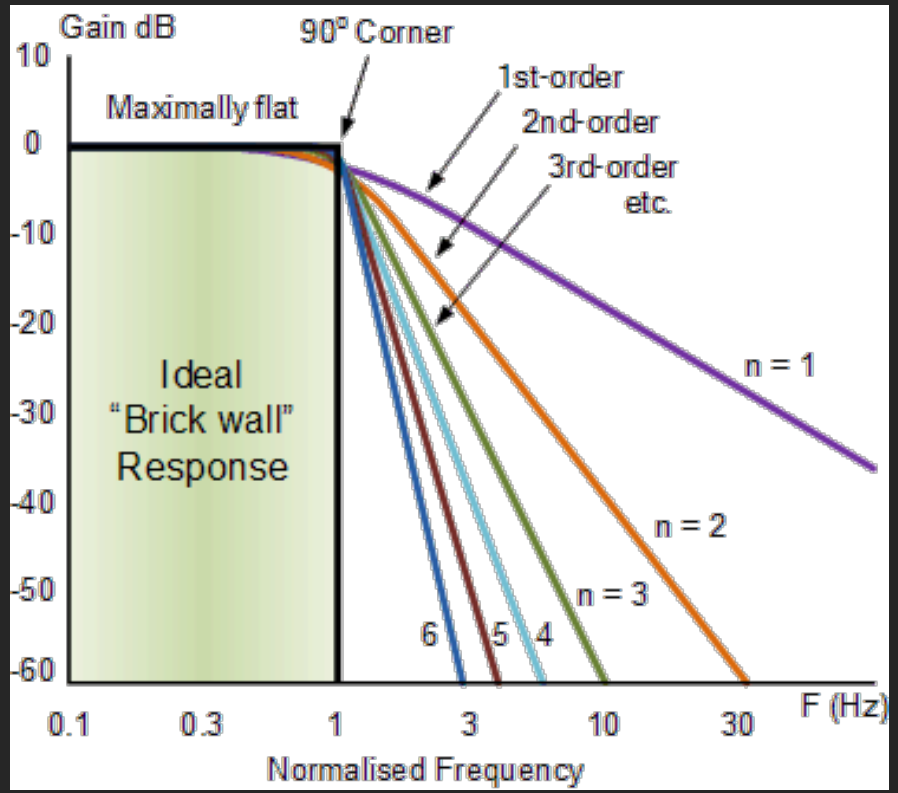

Butterworth frequency response

$$H_{(j\omega)} = \frac{1}{\sqrt{1+\varepsilon^2\left(\frac{\omega}{\omega_p}\right)^{2n}}}$$

Epsilon = constant
n = order number
j = Sqrt(-1)
omega = 2*pi*freq
$omega_p$ = Cutoff frequency

https://www.electronics-tutorials.ws/filter/filter_8.html

Motivations
Two-port network
Transducer Gain
S-parameters
VNA
Noise Figure
LNA
Frii's formula
RF Filters
Butterworth
Chebyshev

Chebyshev filter

Chebyshev polynomials

$$
\begin{aligned}
T_0(x) &= 1 \\
T_1(x) &= x \\
T_2(x) &= 2x^2 - 1 \\
T_3(x) &= 4x^3 - 3x \\
T_4(x) &= 8x^4 - 8x^2 + 1 \\
T_5(x) &= 16x^5 - 20x^3 + 5x \\
T_6(x) &= 32x^6 - 48x^4 + 18x^2 - 1 \\
T_7(x) &= 64x^7 - 112x^5 + 56x^3 - 7x \\
T_8(x) &= 128x^8 - 256x^6 + 160x^4 - 32x^2 + 1 \\
T_9(x) &= 256x^9 - 576x^7 + 432x^5 - 120x^3 + 9x \\
T_{10}(x) &= 512x^{10} - 1280x^8 + 1120x^6 - 400x^4 + 50x^2 - 1
\end{aligned}
$$

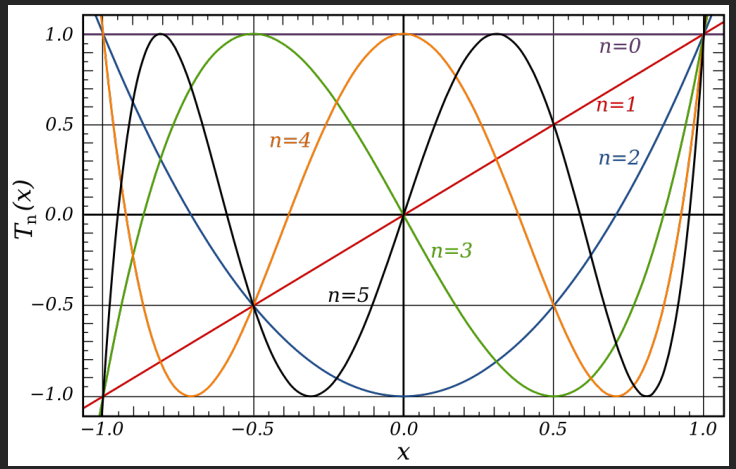

The first few Chebyshev polynomials of the first kind in the domain $-1 < x < 1$: The flat T_0, T_1, T_2, T_3, T_4 and T_5.

https://en.wikipedia.org/wiki/Chebyshev_polynomials

Motivations
Two-port network
Transducer Gain
S-parameters
VNA
Noise Figure
LNA
Frii's formula
RF Filters
Butterworth
Chebyshev
Low-pass

Chebyshev low-pass filter

Type I

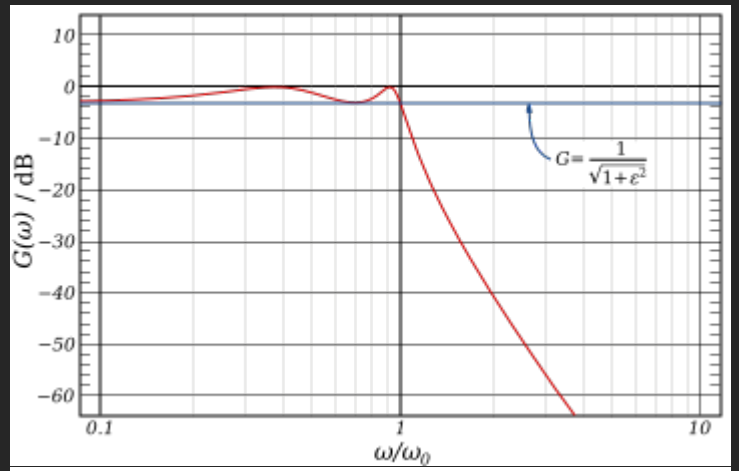

$$G_n(\omega) = |H_n(j\omega)| = \frac{1}{\sqrt{1+\varepsilon^2 T_n^2(\omega/\omega_0)}}$$

- Steep rolloff
- More passband ripples

Type II (Inverse Chebyshev)

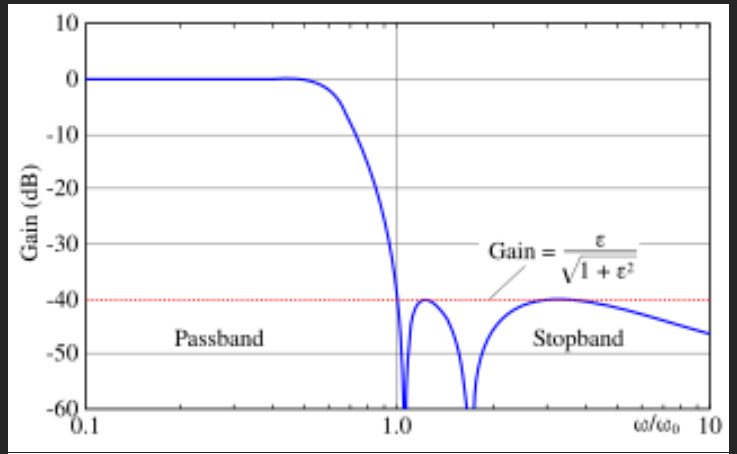

$$G_n(\omega) = \frac{1}{\sqrt{1+\frac{1}{\varepsilon^2 T_n^2(\omega_0/\omega)}}} = \sqrt{\frac{\varepsilon^2 T_n^2(\omega_0/\omega)}{1+\varepsilon^2 T_n^2(\omega_0/\omega)}}.$$

- Less steep rolloff
- Less passband ripples

Motivations
Two-port network
Transducer Gain
S-parameters
VNA
Noise Figure
LNA
Frii's formula
RF Filters
Butterworth
Chebyshev
Low-pass

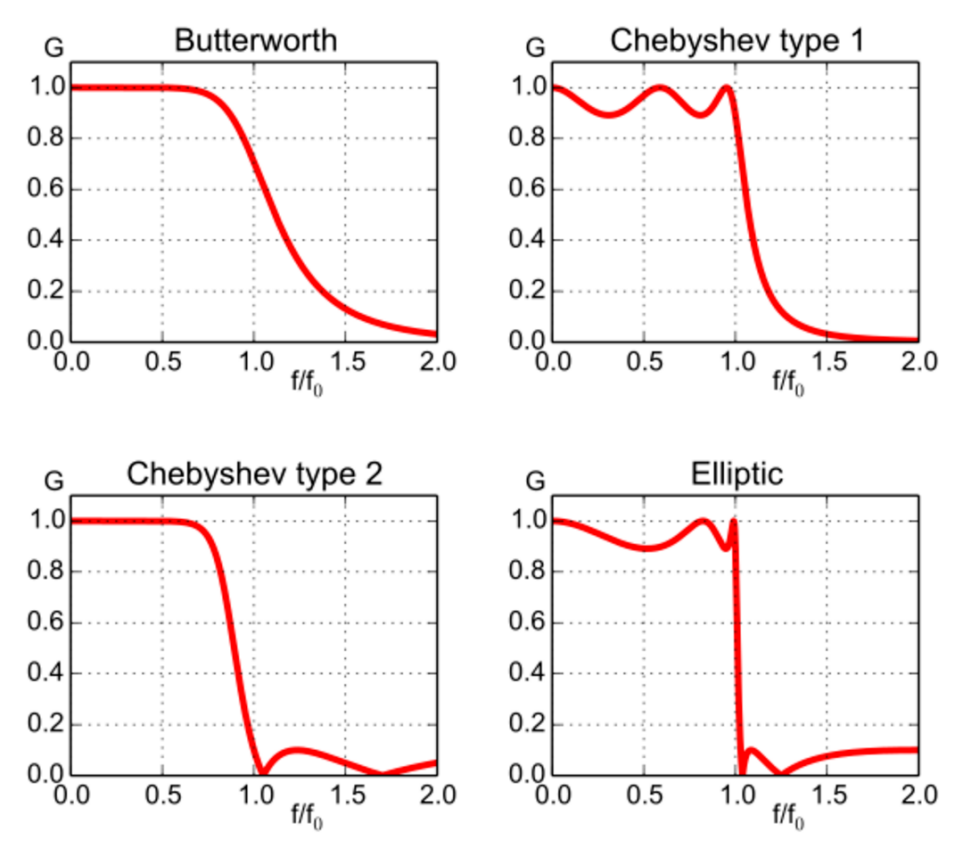

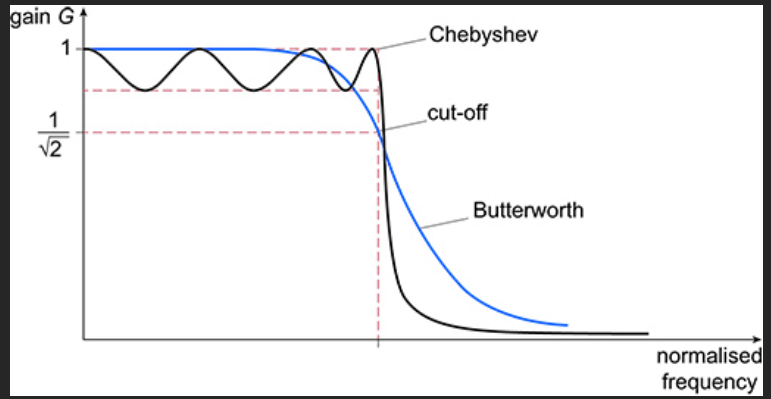

Motivations
Two-port network
Transducer Gain
S-parameters
VNA
Noise Figure
LNA
Frii's formula
RF Filters
Butterworth
Chebyshev
Low-pass
Bandpass

Chebyshev bandpass filter

$$G_{\mathrm{LP}}(\nu) = \left[1 + \frac{1}{\epsilon_{\mathrm{LP}}^2 T_k^2\left(\frac{\nu_{0,\mathrm{LP}}}{\nu}\right)}\right]^{-\frac{1}{2}}$$

$$G_{\mathrm{HP}}(\nu) = \left[1 + \frac{1}{\epsilon_{\mathrm{HP}}^2 T_k^2\left(\frac{\nu}{\nu_{0,\mathrm{HP}}}\right)}\right]^{-\frac{1}{2}}$$

$$G_{\mathrm{BPF}}(\nu) = G_{\mathrm{LP}}(\nu) G_{\mathrm{HP}}(\nu)$$

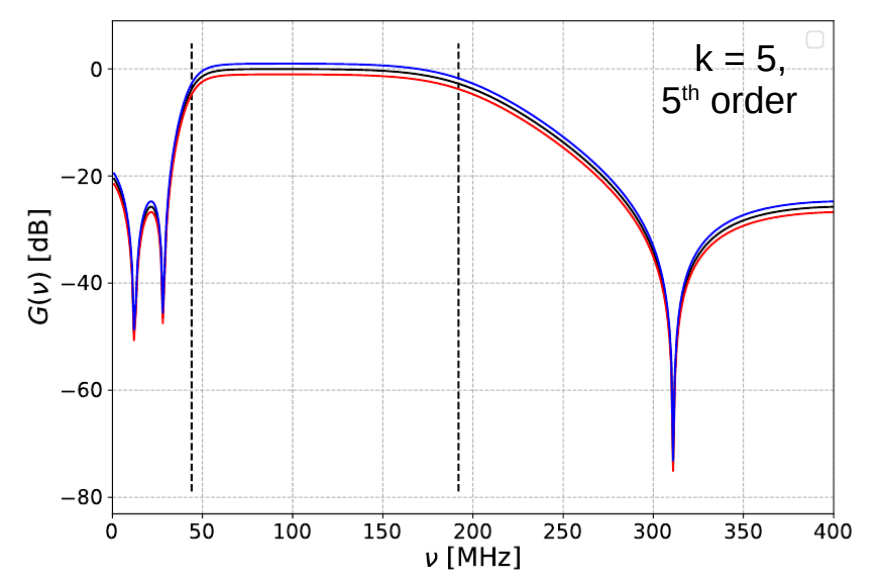

Motivations
Two-port network
Transducer Gain
S-parameters
VNA
Noise Figure
LNA
Frii's formula
RF Filters
Butterworth
Chebyshev
Low-pass
Bandpass

Chebyshev bandpass filter example

DOI:10.3390/electronics9020313

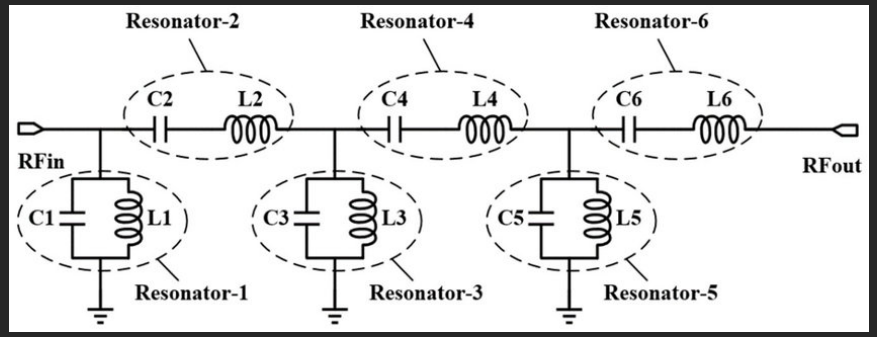

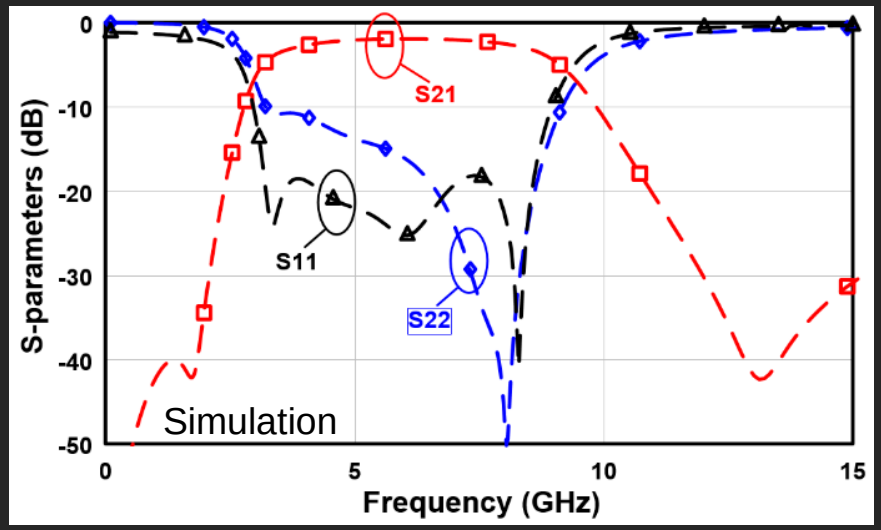

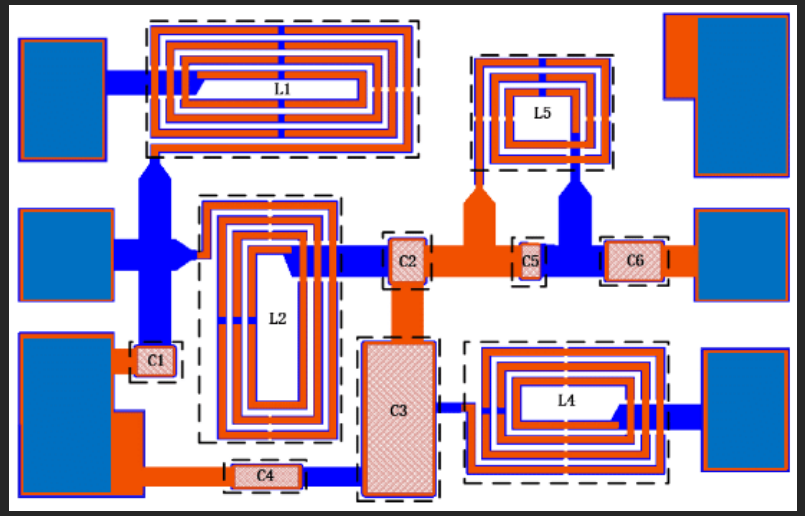

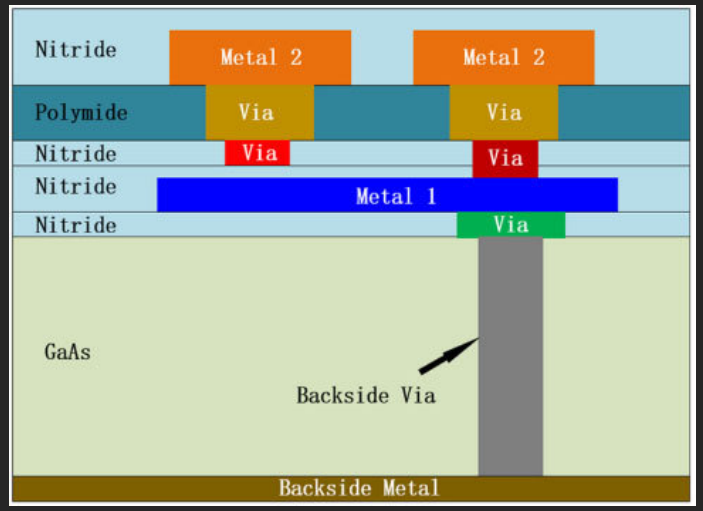

Motivations
Two-port network
Transducer Gain
S-parameters
VNA
Noise Figure
LNA
Frii's formula
RF Filters
Butterworth
Chebyshev
Low-pass
Bandpass
Datasheet

Electronic component datasheet intro

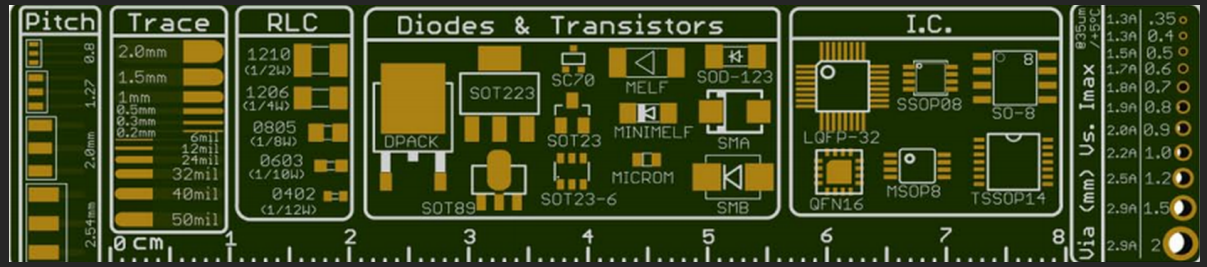

yiyielectronics.en.alibaba.com

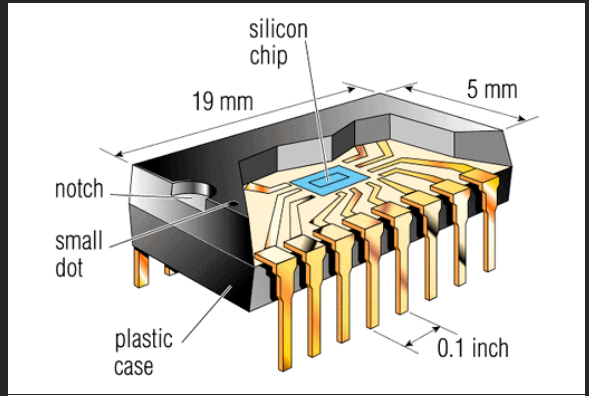

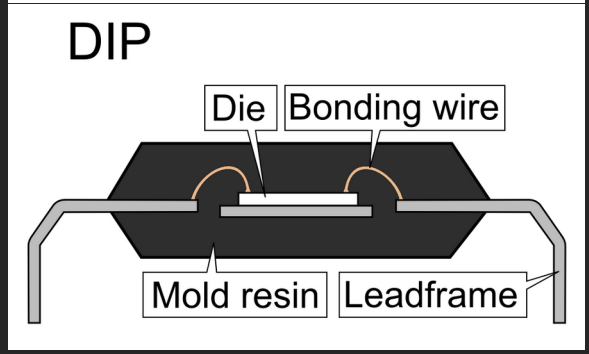

Motivations
Two-port network
Transducer Gain
S-parameters
VNA
Noise Figure
LNA
Frii's formula
RF Filters
Butterworth
Chebyshev
Low-pass
Bandpass
Datasheet

Datasheet Example: Mini-circuit MAR-6+ LNA

Mini-Circuits

Model No. Search
Site Search
English

Products | Tools and Resources | Quality and Compliance | About Us | Contact and Support | Careers | Blog | Hello, Sign in Your Account

RF & Microwave Products › Amplifiers

MAR-6+

SMT MMIC, Low Noise, Linear, HBT Amplifier, DC to 2000 MHz, 50Ω, Micro-X Style Package

Generic photo used for illustration purposes only.

Data, Drawings & Downloads

- DATASHEET
- View Data
- View Graphs
- S-PARAMETERS
- Case Style - VV105
- T & R - F4
- PCB Layout - 98-PL-262

Additional Information

- Export Info
- RoHS
- General Technical Notes
- Application Notes
- PCN History
- Tools
- Upscreening Services
- Contact Us

Pricing & Availability

International Shipping Option >

Quantity	Unit Price
20	$1.71
50	$1.58
100	$1.58
200	$1.51
500	$1.39
1000	$1.22
2000	$1.22

https://www.minicircuits.com/WebStore/dashboard.html?model=MAR-6%2B

Motivations
Two-port network
Transducer Gain
S-parameters
VNA
Noise Figure
LNA
Frii's formula
RF Filters
Butterworth
Chebyshev
Low-pass
Bandpass
Datasheet

Datasheet Example: Mini-circuit MAR-6+ LNA

Drop-In

Monolithic Amplifier

DC-2 GHz

Product Features
- Wideband, DC to 2 GHz
- High gain, 22 dB typ. at 0.1 GHz
- Internally Matched to 50 Ohms
- Low noise figure, 3.0 dB typ.
- Cascadable
- Aqueous washable

Typical Applications
- Cellular
- PCN instrumentation

Frequency
Gain
Impedance
Noise figure
Other features
Applications

Package size

MAR-6+

CASE STYLE: VV105
PRICE: $1.16 ea. QTY. (30)

+RoHS Compliant
The +Suffix identifies RoHS Compliance. See our web site for RoHS Compliance methodologies and qualifications

General Description
MAR-6+ (RoHS compliant) is a wideband amplifier offering high dynamic range. It has repeatable performance from lot to lot. It is enclosed in a Micro-X package. MAR-6+ uses Darlington configuration. Expected MTBF is 2,200 years at 85°C case temperature.

https://www.minicircuits.com/pdfs/MAR-6+.pdf

Motivations
Two-port network
Transducer Gain
S-parameters
VNA
Noise Figure
LNA
Frii's formula
RF Filters
Butterworth
Chebyshev
Low-pass
Bandpass
Datasheet

Datasheet: Component Specifications

Electrical Specifications at 25°C and 16mA, unless noted

Parameter		Min.	Typ.[3]	Max.	Units
Frequency Range*		DC		2	GHz
Gain	f=0.1 GHz f=1 GHz f=2 GHz	— — 15[2]	22 20 17	— — —	dB
Input Return Loss	f=DC to 2 GHz		21		dB
Output Return Loss	f=DC to 2 GHz		17.5		dB
Output Power @ 1 dB compression	f=0.5 GHz		+3.0		dBm
Output IP3	f=0.5 GHz		+14.5		dBm
Noise Figure	f=0.5 GHz		3.0		dB
Recommended Device Operating Current			16		mA
Device Operating Voltage			3.5		V
Device Voltage Variation vs. Temperature at 16 mA			-5.6		mV/°C
Device Voltage Variation vs. Current at 25°C			8.4		mV/mA
Thermal Resistance, junction-to-case[1]			241		°C/W

*Guaranteed specification DC-2 GHz. Low frequency cut off determined by external coupling capacitors.

Absolute Maximum Ratings

Parameter	Ratings
Operating Temperature	-40°C to 85°C
Storage Temperature	-55°C to 100°C
Operating Current	50mA
Power Dissipation	200mW
Input Power	13dBm

Note: Permanent damage may occur if any of these limits are exceeded.
These ratings are not intended for continuous normal operation.
[1]Case is defined as ground leads.
[2]Full temperature range.
[3]Based on test data of Model MAR-6SM+ (Case Style WW107).

Most specifications are provided at a nominal room temperature (e.g. 25 C)
→ Will change in actual operating environment

Motivations
Two-port network
Transducer Gain
S-parameters
VNA
Noise Figure
LNA
Frii's formula
RF Filters
Butterworth
Chebyshev
Low-pass
Bandpass
Datasheet

Datasheet: Component Specifications

simplified schematic and pin description

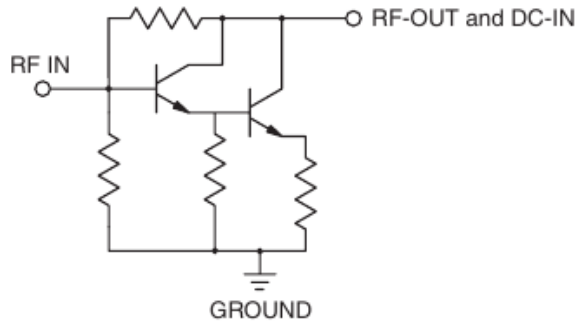

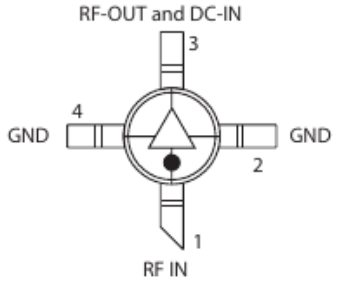

Function	Pin Number	Description
RF IN	1	RF input pin. This pin requires the use of an external DC blocking capacitor chosen for the frequency of operation.
RF-OUT and DC-IN	3	RF output and bias pin. DC voltage is present on this pin; therefore a DC blocking capacitor is necessary for proper operation. An RF choke is needed to feed DC bias without loss of RF signal due to the bias connection, as shown in "Recommended Application Circuit".
GND	2,4	Connections to ground. Use via holes as shown in "Suggested Layout for PCB Design" to reduce ground path inductance for best performance.

Motivations
Two-port network
Transducer Gain
S-parameters
VNA
Noise Figure
LNA
Frii's formula
RF Filters
Butterworth
Chebyshev
Low-pass
Bandpass
Datasheet

Datasheet: Example application circuit

Recommended Application Circuit

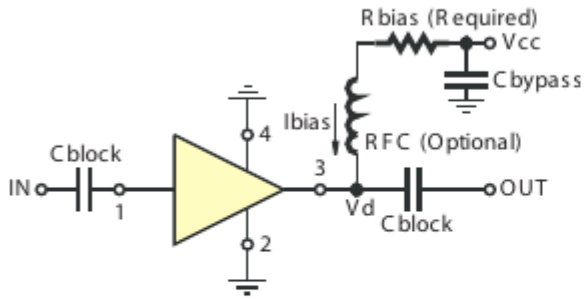

Test Board includes case, connectors, and components (in bold) soldered to PCB

R BIAS	
Vcc	"1%" Res. Values (ohms) for Optimum Biasing
6	154
7	215
8	280
9	340
10	402
11	464
12	536
13	590
14	665

Specsheet sometimes provide basic examples on how to connect and power on the chip, can be changed for specific circuit design by the users.

Motivations
Two-port network
Transducer Gain
S-parameters
VNA
Noise Figure
LNA
Frii's formula
RF Filters
Butterworth
Chebyshev
Low-pass
Bandpass
Datasheet
RF simulation

RF/Microwave Circuit Simulation

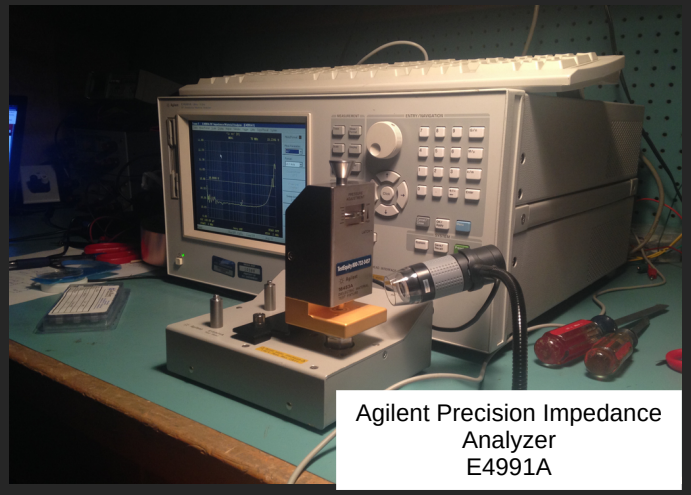

Agilent Precision Impedance Analyzer
E4991A

- Parasitic effects on passive components as a function of frequency
- Need accurate measurement and modeling

Table 6-4 Selection of Equivalent Circuit (E4991A Manual)

	Equivalent Circuit Model	Typical Frequency Characteristics	DUT Example
A	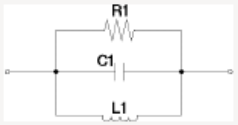	*1	Inductor with high core loss
B	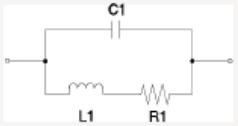	*1	Inductor Resistor
C	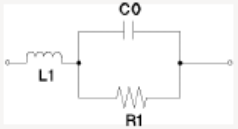	*1 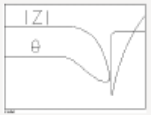	High-value resistor
D	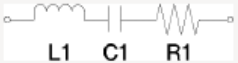	*1	Capacitor
E	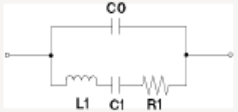	*2	Resonator

*1. Measurement parameter: | Z | - θ, Sweep type: log, Vertical axis: | Z | is log and θ is linear

Motivations
Two-port network
Transducer Gain
S-parameters
VNA
Noise Figure
LNA
Frii's formula
RF Filters
Butterworth
Chebyshev
Low-pass
Bandpass
Datasheet
RF simulation

Detailed circuit modeling example: Power Splitter (Of-the-shelf IC)

(R. Bradley & D. Bordenave)

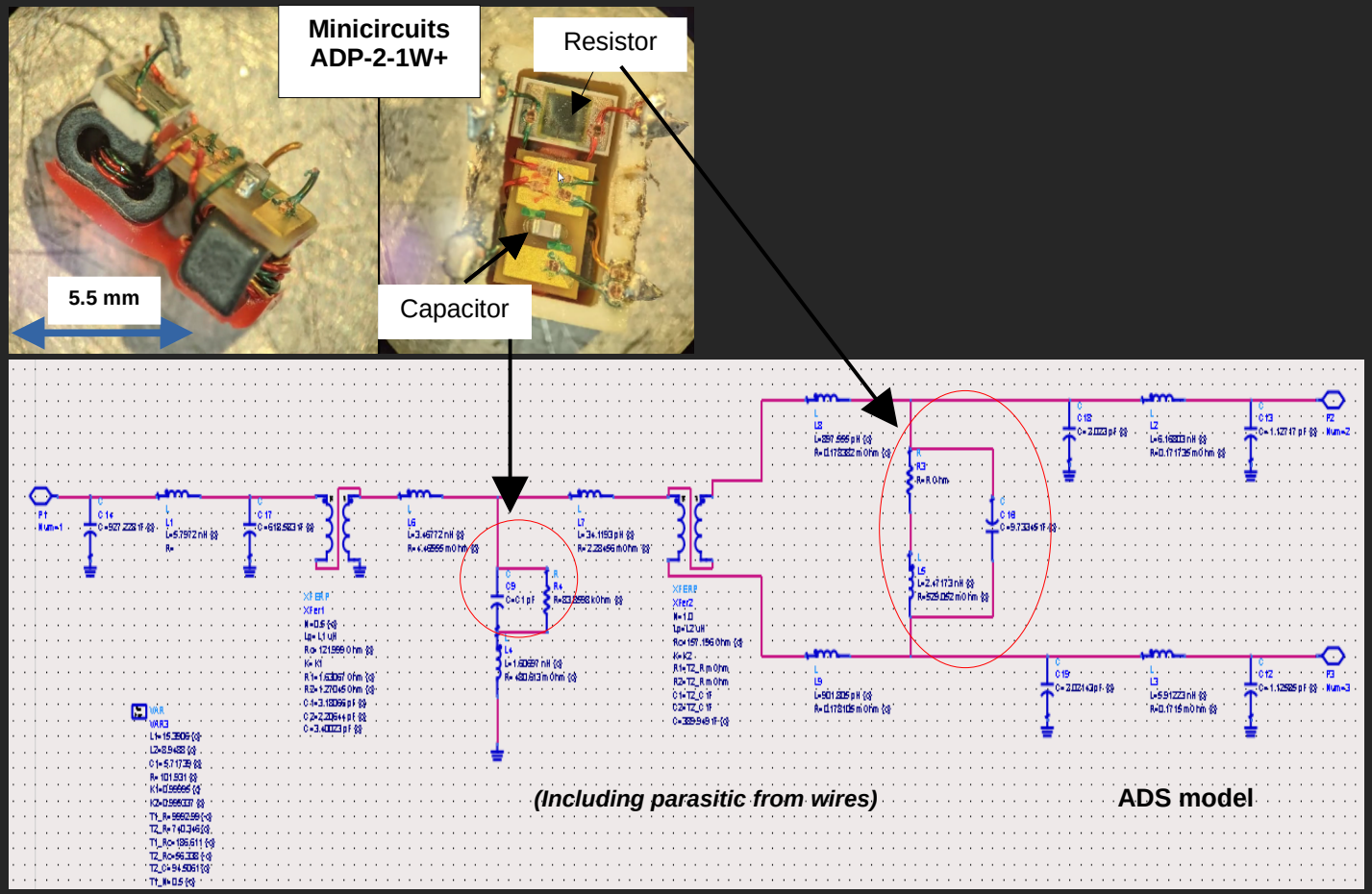

Motivations
Two-port network
Transducer Gain
S-parameters
VNA
Noise Figure
LNA
Frii's formula
RF Filters
Butterworth
Chebyshev
Low-pass
Bandpass
Datasheet
RF simulation

Example 1: Power Splitter (Of-the-shelf IC)

(R. Bradley & D. Bordenave)

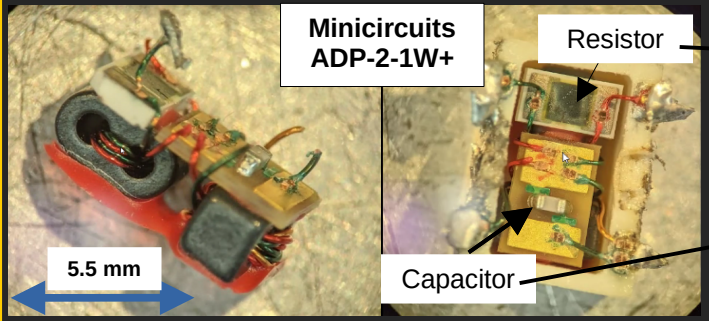

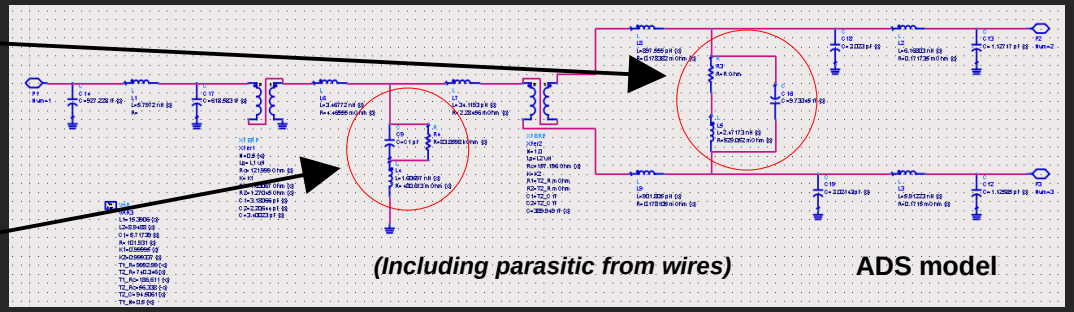

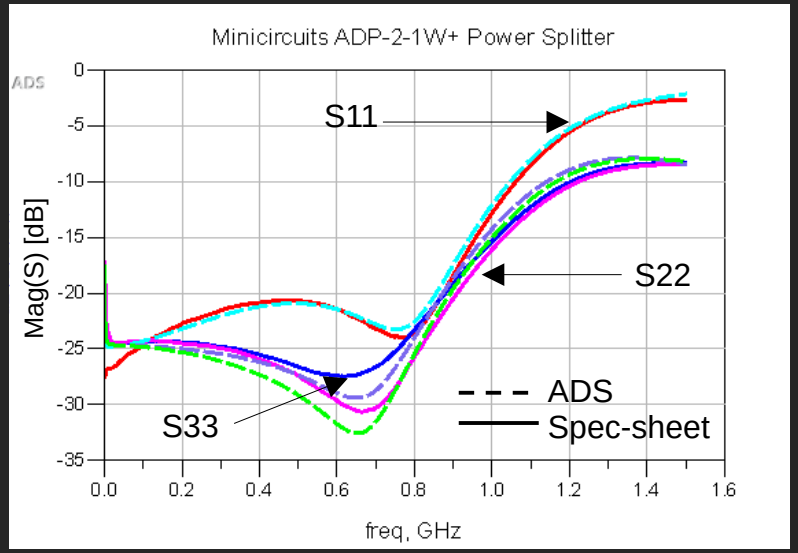

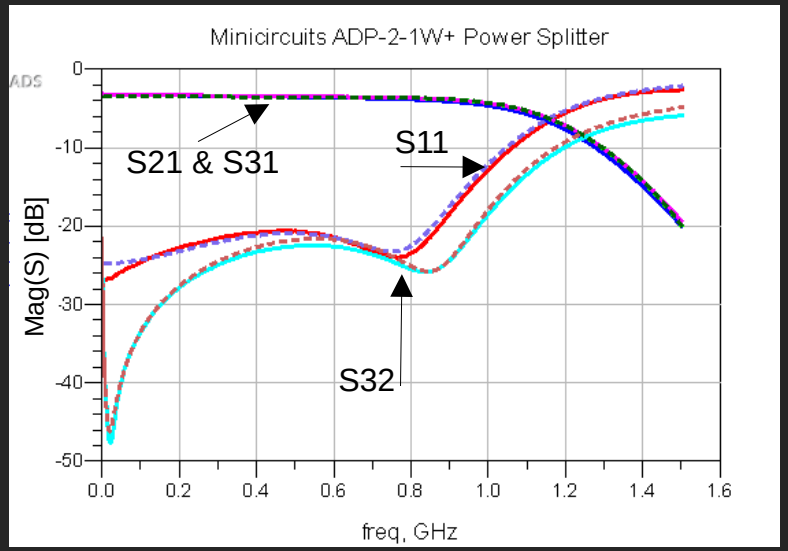

Motivations
Two-port network
Transducer Gain
S-parameters
VNA
Noise Figure
LNA
Frii's formula
RF Filters
Butterworth
Chebyshev
Low-pass
Bandpass
Datasheet
RF simulation
Reference

Reference
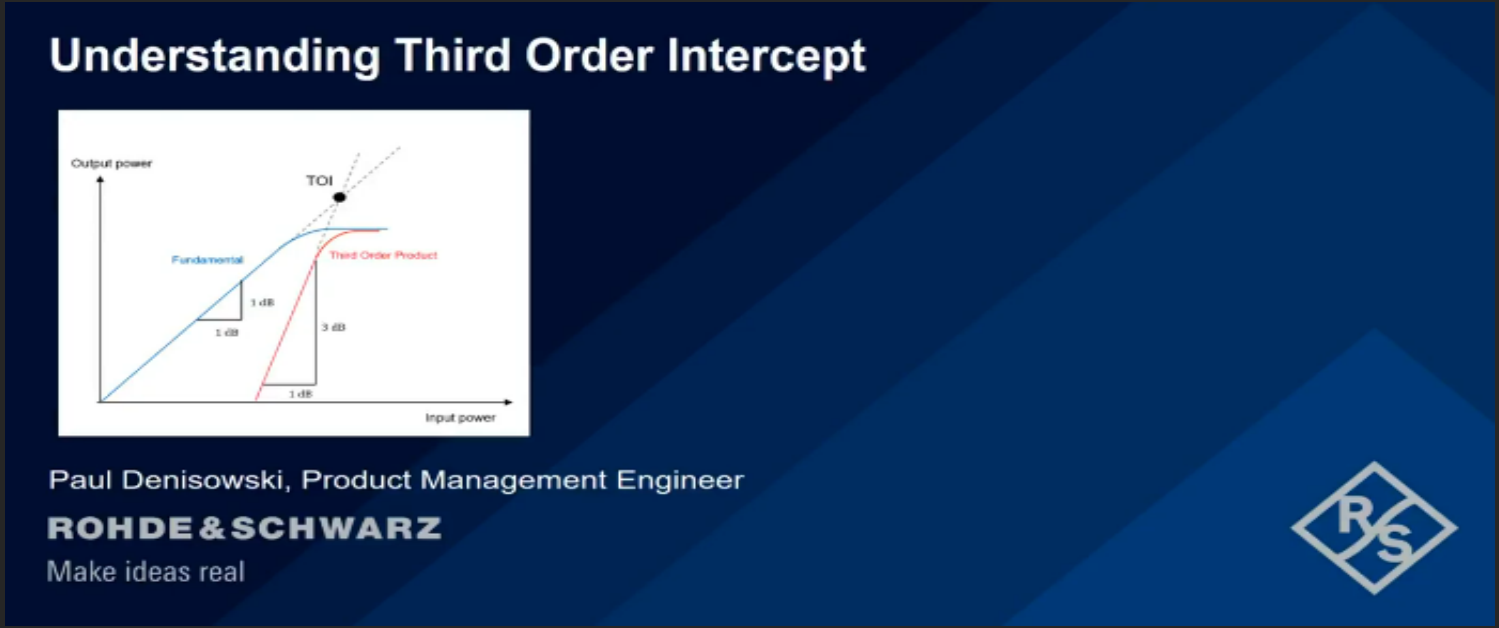
- Low Noise Amplifier (LNA) (Common Source Amplifier) lecture
- Intermodulation Distortion (IMD) video
- Rohde Schwarz Tutorial – Understanding Third Order Intercept