Bandpass Filter

Circuit

Components:

Highpass Filter: C1=100nF, R1=196Ω.

Lowpass Filter: C2=10nF, R2=330Ω.

frequency domain: 10k - 50k , simulated from 1k-500k (Hz)

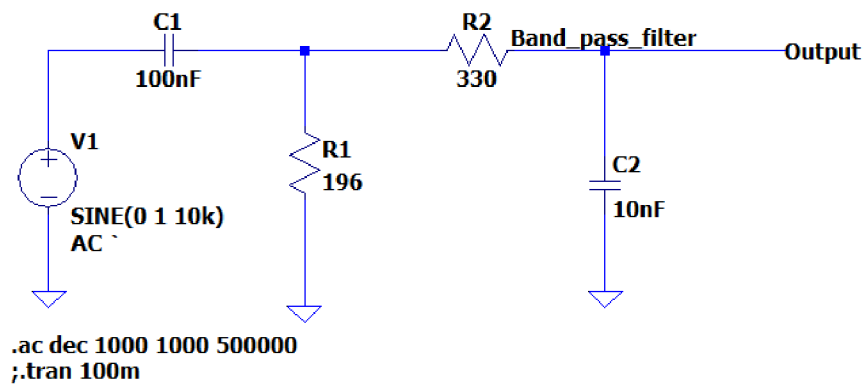

Caculation

High pass filter, cutoff frequency:

$R_1 = 196\ \Omega$

$C_1 = 100\ \text{nF}$

$\text{fc} = \frac{1}{2\pi R_1 C_1} = 8.038\ \text{KHz}$

Low pass filter, cutoff frequency:

$R_1 = 330\ \Omega$

$C_1 = 10\ \text{nF}$

$\text{fc} = \frac{1}{2\,\pi R_1\,C_1} = 48.228\ \text{KHz}$

Simulation

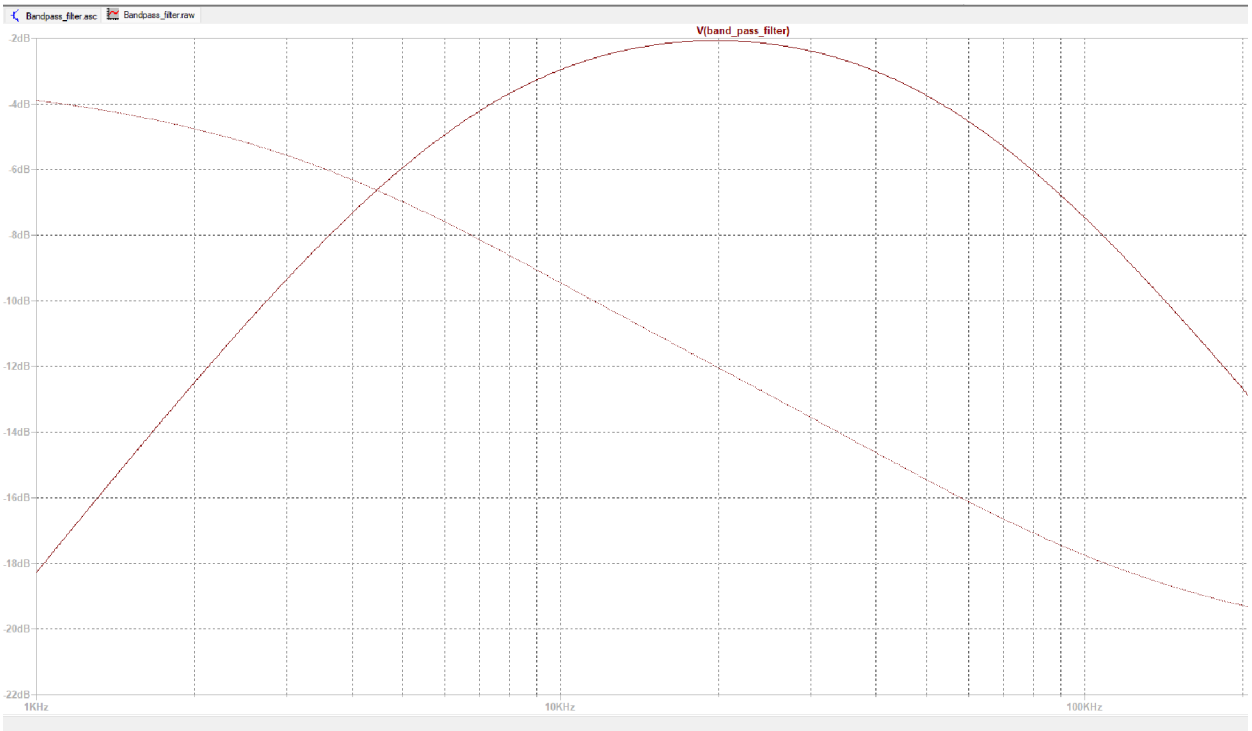

In[48]:=
```
(*High pass filter - cutoff frequency*)
R1 = 198 ; (*Ω*)
C1 = 100 n; (*F*)
fc1 = 1/(2 π R1 C1) // N (*Hz*)
```

Out[50]=

8038.13

In[42]:=
```
(*Low pass filter - cutoff frequency*)
R2 = 330; (*Ω*)
C2 = 10 n ; (*F*)
fc2 = 1/(2 π R2 C2) // N (*Hz*)
```

Out[44]=

48 228.8

In[41]:=
```
(* Simulation: Cut-off amplitude constant corespond to -4dB *)
Simconstant = 10^(-3/20) // N
```

Out[41]=
```
0.707946
```

```
(* Experiment: Cut-off amplitude constant corespond to -9dB *)
Exconstant = 10^(-9/20) // N
```

Out[39]=
```
0.354813
```

Experiment test

The picture shows the ratio of amplitudes using a bandpass filter and an amplitude input with a frequency range from 1 kHz to 500 kHz.

In[99]:=
```
rawdata = Drop[Import[NotebookDirectory[] <> "data.txt", "Data"], 1];
data = Transpose[{Log[10, #] & /@ rawdata[[All, 1]], rawdata[[All, 2]]}] // N;
```
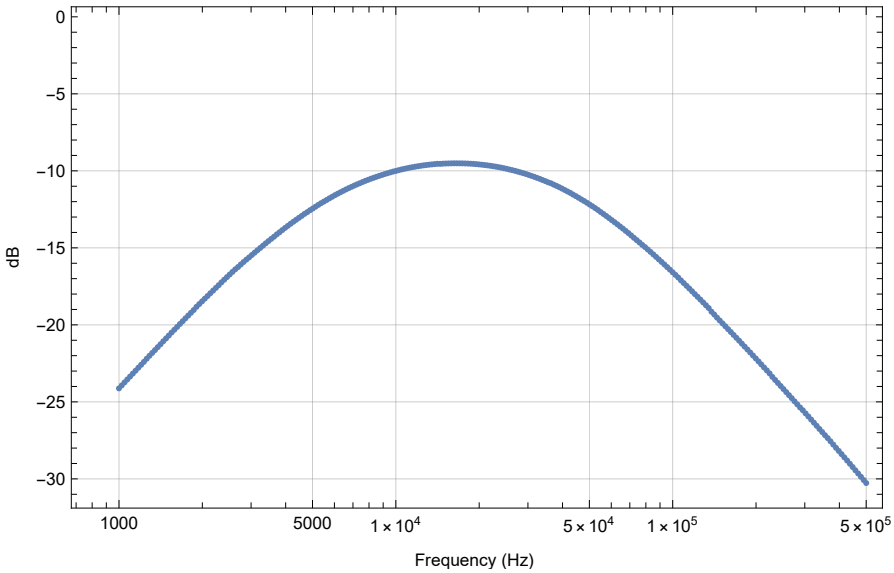
Out[121]=