Prestel Headquarters
Post Office Telecommunications
Telephone House
Temple Avenue
London EC4Y 0HL

Telephone: (01) 583 9811
International Code (+441)

Telex: 261040

October 1981

Dear Sir

PRESTEL TERMINAL SPECIFICATION
EDITION ONE AMENDMENTS

The Prestel Liaison Group Technical Sub-Committee has authorised the attached amendments. Sections of the specification that have been changed are indicated in the replacement index by the issue number. Details of the changes are listed as follows:

Section 2.5	Reworded paragraph for clarification
Fig 2a	Binary representation of H,000100 should read 0001001
Section 4.4	Para 4. 77.8ms should read 77.3ms
Section 5.4	New section added
Fig 5a	Character codes 0-9 removed from table since they are not optional
Section 6.3	BS3335:1962 should read BS3535:1962
Section 7.1	Address of British Telecom Attachment Evaluation Group added
Section 7.2	Reworded paragraph for clarification
Table 7a	More detailed approval check list
Section 8.3.3	Para 6. ID example :?618?1111???? should have a further ? at the end
Appendix 2	Title "Appendix 2 Indemnity Agreement" added to front page of the document.

If you should have any questions relating to these changes please don't hesitate to contact me.

A W ANDERSON
Prestel Manufactures Liaison

Prestel and the Prestel symbol are trademarks of the Post Office viewdata service

COPY NO.
PRICE £10

PRESTEL TERMINAL SPECIFICATION

EDITION ONE

The contents of this specification have been agreed with nominated representatives of the manufacturing industry and is issued under the auspices of the Prestel Liaison Group Technical Sub-Committee — PLG (Tech) Sub-Committee.

Designed & Printed by PE/S/Reprographic Services.

©1980, the Post Office
Prestel is a Trade Mark of the Post Office

EDITION ONE of the Prestel Terminal Specification, issued January 1981, will be mandatory for all terminals submitted for attachment approval on or after 1st JUNE 1981.

Manufacturers submitting terminals for attachment approval from the date of issue up to 1st JUNE 1981 shall declare any variation from this specification in writing. They will then be considered in accordance with current procedures.

Advice on the implementation of these procedures can be obtained from:—

PRESTEL HEADQUARTERS
PRESTEL 4.1.2
TELEPHONE HOUSE
TEMPLE AVENUE
LONDON EC4Y 0HL

INTRODUCTION

Prestel is the British Telecom Service which uses the Public Switched Telephone Network as a medium to retrieve information from a computer based information store.

This specification contains the mandatory requirements to interface a Prestel Terminal with a telephone line that are necessary to obtain Attachment Approval. **Paragraphs in this specification concerned with the mandatory requirements are in bold type.** The specification also contains recommendations that although not mandatory are approved jointly by British Telecom and the Industry Trade Associations. Additional information is included that may be useful to prospective manufacturers of Prestel Terminals.

The information in this specification relates to a standard user terminal accessing a Prestel Information Retrieval Computer. It is anticipated that new services may be introduced and that some may require changes to this specification. However it has been agreed that changes will only be made after full consultation with the UK Industry Trade Associations.

References in this document to British Telecom apply to the Telecommunications Business of the Post Office.

INDEX

INTRODUCTION

1	**FUNCTIONAL DESCRIPTION**	ISSUE 1
2	**CHARACTER CODES AND DISPLAY**	
2.1	Data Format	ISSUE 1
2.2	Display Characters	ISSUE 1
2.3	Control Characters	ISSUE 1
2.4	Backward Channel Characters	ISSUE 1
2.5	Remote Programming Characters	ISSUE 1
2.6	Undefined Character Codes	ISSUE 1
Table 2a	Prestel Transmission Codes	ISSUE 1
2b	Display Attribute Control Codes	ISSUE 1
Fig 2a	Examples of Alphanumeric and Mosaic Display	ISSUE 1
3	**MODEM AND LINE CHARACTERISTICS**	
3.1	Modem Characteristics	ISSUE 1
3.2	Line Characteristics	ISSUE 1
3.3	External Modems	ISSUE 1
Fig 3a	Spectral Components	ISSUE 1
3b	Spectral Components above 3.4 kHz	ISSUE 1
3c	Line Attenuation	ISSUE 1
3d	Line Group Delay	ISSUE 1
4	**TELEPHONE LINE INTERFACE**	
4.1	Physical Termination	ISSUE 1
4.2	DC Conditions	ISSUE 1
4.3	AC Conditions	ISSUE 1
4.4	Auto Dialling	ISSUE 1
4.5	Connection Protocol	ISSUE 1
4.6	Manual Dialling	ISSUE 1
4.7	Other Signalling Systems	ISSUE 1
Fig 4a	Jack 96A	ISSUE 1
4b	Plug 505	ISSUE 1
4c	Jack 96A Contacts	ISSUE 1
4d	Autodialler Pulses	ISSUE 1
5	**PERIPHERAL EQUIPMENT**	
5.1	Alphanumeric Keyboard and Interface	ISSUE 1
5.2	Tape Recorder Interface	ISSUE 1
5.3	Tape Recorder Control Characters	ISSUE 1
5.4	Printer Interface	NOT YET ISSUED
Fig 5a	Optional Transmission Codes	ISSUE 1

INDEX

INTRODUCTION

1	**FUNCTIONAL DESCRIPTION**	ISSUE 1
2	**CHARACTER CODES AND DISPLAY**	
	2.1 Data Format	ISSUE 1
	2.2 Display Characters	ISSUE 1
	2.3 Control Characters	ISSUE 1
	2.4 Backward Channel Characters	ISSUE 1
	2.5 Remote Programming Characters	ISSUE 2
	2.6 Undefined Character Codes	ISSUE 1
	Table 2a Prestel Transmission Codes	ISSUE 1
	2b Display Attribute Control Codes	ISSUE 1
	Fig 2a Examples of Alphanumeric and Mosaic Display	ISSUE 2
3	**MODEM AND LINE CHARACTERISTICS**	
	3.1 Modem Characteristics	ISSUE 1
	3.2 Line Characteristics	ISSUE 1
	3.3 External Modems	ISSUE 1
	Fig 3a Spectral Components	ISSUE 1
	3b Spectral Components above 3.4 kHz	ISSUE 1
	3c Line Attenuation	ISSUE 1
	3d Line Group Delay	ISSUE 1
		ISSUE 1
4	**TELEPHONE LINE INTERFACE**	
	4.1 Physical Termination	ISSUE 1
	4.2 DC Conditions	ISSUE 1
	4.3 AC Conditions	ISSUE 1
	4.4 Auto Dialling	ISSUE 2
	4.5 Connection Protocol	ISSUE 1
	4.6 Manual Dialling	ISSUE 1
	4.7 Other Signalling Systems	ISSUE 1
	Fig 4a Jack 96A	ISSUE 1
	4b Plug 505	ISSUE 1
	4c Jack 96A Contacts	ISSUE 1
	4d Autodialler Pulses	ISSUE 1
		ISSUE 1
5	**PERIPHERAL EQUIPMENT**	ISSUE 1
	5.1 Alphanumeric Keyboard and Interface	ISSUE 1
	5.2 Tape Recorder Interface	ISSUE 1
	5.3 Tape Recorder Control Characters	ISSUE 1
	5.4 Printer Interface	ISSUE 1
	Fig 5a Optional Transmission Codes	ISSUE 2

6	**SAFETY REQUIREMENTS**	
	6.1 General	ISSUE 1
	6.2 Certification of Protection Components	ISSUE 1
	6.3 Transformer Construction	ISSUE 1
	6.4 Protection against Longitudinal Voltages	ISSUE 1
	6.5 Bridging across the Barrier Line	ISSUE 1
	6.6 Protection against Transverse Voltages	ISSUE 1
	6.7 High Voltages	ISSUE 1
	6.8 V24 and RGB Safety Requirements	ISSUE 1
	Fig 6a Safety Requirements	ISSUE 1
	6b V24 and RGB Safety Requirements	ISSUE 1
7	**ATTACHMENT EVALUATION**	
	7.1 Attachment of Private Equipment to British Telecom Maintained Plant	ISSUE 1
	7.2 Attachment to Terminals	ISSUE 1
	7.3 Engineering Changes	ISSUE 1
	7.4 Technical Approval	ISSUE 1
	Table 7a Technical Approval Check List	ISSUE 1
8	**BRITISH TELECOM POLICY**	
	8.1 Telephone Numbers	ISSUE 1
	8.2 Identity Number	ISSUE 1
	8.3 Programming	ISSUE 1
	8.4 Non-Volatile Memory	ISSUE 1
	Fig 8a Remote Programming Flow Chart	ISSUE 1
9	**BRITISH TELECOM RECOMMENDATIONS**	
	9.1 Recommended Keypad	ISSUE 1
	9.2 Recommended Shape of Star and Square	ISSUE 1
	9.3 Recommended Parity Error Symbol	ISSUE 1
	Fig 9a Keypad Layout	ISSUE 1
	9b Star and Square Shape	ISSUE 1
APPENDIX		
1	Standard Tones on the Telephone Network	ISSUE 1
2	Indemnity Agreement	ISSUE 1

6 SAFETY REQUIREMENTS

6.1	General	ISSUE 1
6.2	Certification of Protection Components	ISSUE 1
6.3	Transformer Construction	ISSUE 2
6.4	Protection against Longitudinal Voltages	ISSUE 1
6.5	Bridging across the Barrier Line	ISSUE 1
6.6	Protection against Transverse Voltages	ISSUE 1
6.7	High Voltages	ISSUE 1
6.8	V24 and RGB Safety Requirements	ISSUE 1
Fig 6a	Safety Requirements	ISSUE 1
6b	V24 and RGB Safety Requirements	ISSUE 1

7 ATTACHMENT EVALUATION

7.1	Attachment of Private Equipment to British Telecom Maintained Plant	ISSUE 2
7.2	Attachment to Terminals	ISSUE 2
7.3	Engineering Changes	ISSUE 1
7.4	Technical Approval	ISSUE 1
Table 7a	Technical Approval Check List	ISSUE 2

8 BRITISH TELECOM POLICY

8.1	Telephone Numbers	ISSUE 1
8.2	Identity Number	ISSUE 1
8.3	Programming	ISSUE 2
8.4	Non-Volatile Memory	ISSUE 1
Fig 8a	Remote Programming Flow Chart	ISSUE 1

9 BRITISH TELECOM RECOMMENDATIONS

9.1	Recommended Keypad	ISSUE 1
9.2	Recommended Shape of Star and Square	ISSUE 1
9.3	Recommended Parity Error Symbol	ISSUE 1
Fig 9a	Keypad Layout	ISSUE 1
9b	Star and Square Shape	ISSUE 1

APPENDIX

1	Standard Tones on the Telephone Network	ISSUE 1
2	Indemnity Agreement	ISSUE 2

HOLD MOSAIC (5b/14)
Generally all control characters are displayed as spaces, implying at least one space between rectangles with different display colours in the same row. The hold mosaic mode allows a limited range of abrupt display colour changes by calling for the display of a held mosaic character in the rectangle corresponding to any control character occurring during the mosaic mode. This held character is displayed in the modes obtaining for the rectangle in which it is displayed, except for the contiguous/separated mode which forms part of the structure of the held mosaic character.

The held mosaic character is only defined during the mosaic mode. It is then the most recent character in Columns 2a, 3a, 6a or 7a providing that there has been no intervening change in either the alphanumeric/mosaic or the normal/double height modes. This character is to be displayed in the contiguous or separated mode as when it was first displayed. In the absence of such a character the held mosaic character is taken to be a space. The hold mosaic mode is released by RELEASE MOSAIC (5b/15).

CONTIGUOUS MOSAICS
The contiguous mode (5b/9) is the display mode in which the six cells of the mosaic characters fill the character rectangle (see Fig 2a).

SEPARATED MOSAICS
The separated mode (5b/10) is the display mode in which there is a background colour boundary around and between the six cells of the mosaic characters within the character rectangle (see Fig 2a).

2.4 BACKWARD CHANNEL CHARACTERS

To use the basic Prestel Service the numbers 0-9 (3/0-3/9) star (*,2/10) and Square (#,5/15) are the only characters required. (See Section 9.1 for recommended keypad layout.) Additional backward channel codes may be transmitted under the control of a alphanumeric keyboard. (See Section 5.1.)

2.5 REMOTE PROGRAMMING CHARACTERS

Column 3b in Table 2a contains the characters sent by the computer to activate the terminal for down-line programming of the terminal identity and telephone access numbers. After receiving a remote programming character the terminal must be capable of receiving a further remote programming character after a period of 20mS. A detailed description of remote programming protocol is included in Section 8 of this specification.

2.6 UNDEFINED CHARACTER CODES

Individual codes not illustrated in Fig 2a have an undefined response and may be used for unspecified purposes. Any terminal not specifically designed to exploit any of these codes shall take no action on their receipt.

FIG 2A EXAMPLES OF ALPHANUMERIC AND MOSAIC DISPLAYS

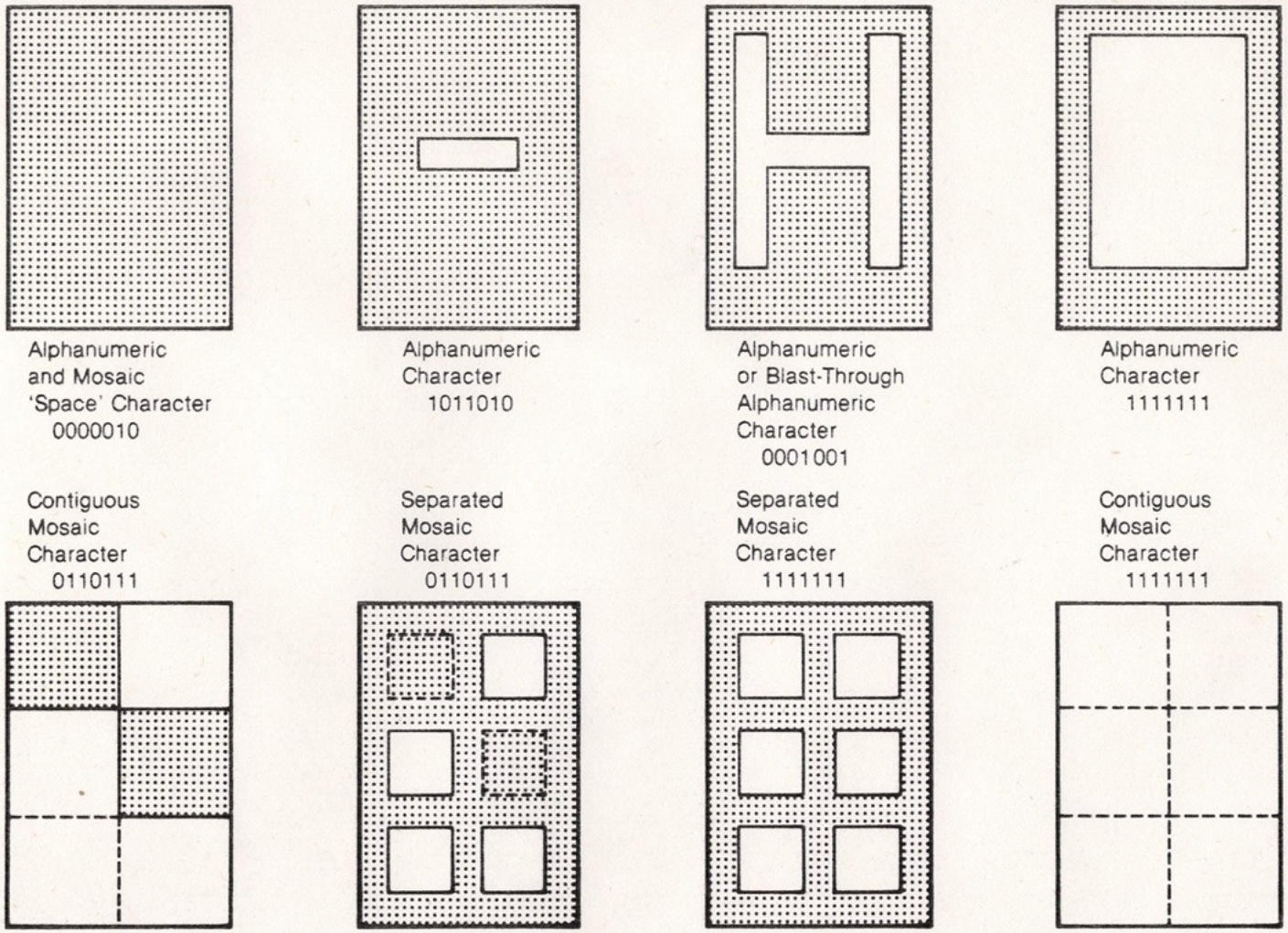

KEY

Background Colour

Display Colour

Note: Character Bytes are listed as transmitted from b_1-b_7.

4 TELEPHONE LINE INTERFACE

4.1 PHYSICAL TERMINATION

British Telecom will install a Jack 96A (Fig 4a) in customers premises to access Prestel. The customers Prestel Terminal will require a suitable compatible plug, eg a British Telecom Plug 505 (Fig 4b). The telephone connections to the Jack 96A are shown in (Fig 4c).

4.2 DC CONDITIONS

Four sets of d.c. conditions are specified for the line interface:

a. The off-line condition (idle state) applies when the terminal is not using the telephone line.

b. The line holding condition applies when the terminal goes on-line, is sending tones to or receiving tones from the line and during inter-digit pauses.

c. The pulsing make condition applies during the make part of a dialled digit pulse.

d. The pulsing break condition applies during the break-part of a dialled digit pulse.

		Plug Points	Resistance	Capacitance
a.	Off-line	2-3	> 5 Mohm*	≤ 0.01 micro F
	Idle Condition	1-5	< 10 ohm	
b.	Line	2-3	≤ 300 ohm +	
	Holding Condition	1-5	> 5 Mohm	
c.	Pulsing Make	2-3	≤ 50 ohm	
		1-5	> 5 Mohm	
d.	Pulsing Break	2-3	> 5 Mohm	
		1-5	> 5 Mohm*	
	All times	Any to Earth	> 5 Mohm*	≤ 0.01 micro F

* Measured at 250 V d.c. All conditions to be independent of polarity.
\+ Measured with line currents up to 120 mA (maximum d.c. short circuit current available from line).
When the terminal is transferring to the line holding state the high impedance between plug points 1 and 5 must not be presented more than 20 ms before the low impedance is presented between plug points 2 and 3.

4.3 AC CONDITIONS

When the terminal is on-line (ie line holding condition) it shall present an impedance between 400 and 900 ohms at an angle not greater than 45 degrees for all frequencies between 300 Hz and 3400 Hz between plug points 2 and 3.

4.4 AUTODIALLING

If a loop disconnect autodialler is fitted then the following requirements must be met:—

The digit signals shall appear as loop disconnect pulses between plug points 2 and 3 at a repetition rate of between 9 and 11 pulses per second.

The break period shall be between 63% and 70% of the total pulse period (break plus make).

The length of the break period [condition 4.2 (d)] of each pulse shall be within the limits of 57.2 to 77.3 mS **and the length of the make period [condition 4.2 (c)] between any two break periods shall be within the limits 27.2 to 41.1 ms.**

For a period of at least 5 ms before and after pulsing condition 4.2(c) shall apply.

The digit to be dialled represents the number of break pulses to be sent except that digit 0 represents 10 pulses.

Inter digit pauses shall be provided and the duration shall be between 800 and 900 ms.

During the pause, condition 4.2(b) shall apply except during the first and last 5 ms periods when condition 4.2(c) shall apply. Fig 4d explains this diagrammatically.

See Section 7.4.2 for Autodialler test and spark quench recommendation.

4.5 CONNECTION PROTOCOL

The setting up of a call to the Prestel computer is described stage by stage as follows:—

1 **The line must be seized, condition 4.2(b) applies.**

2 **The loudspeaker must be able to monitor the line to check that it is free, ie dial tone returned.**

3 **To limit the level of crosstalk interference, speech or signals on the line below – 57 dBm must not be intelligible.**

4 **Supervisory signals must be made audible to the user regardless of terminal volume settings. The supervisory tones will be in the range of 0 to –30 dBm measured during a burst.** The standard tones used on the network are given in Appendix 1.

5 A local telephone line may be used simultaneously for Prestel and other modulated carrier systems above 10 kHz, eg alarms by carrier. **To prevent interference on the monitoring audio amplifier from these modulated carrier systems and from possible undetermined modulated signals it is required that signals from the telephone line above 10 kHz be attenuated by at least 20 dB relative to 1 kHz between the input terminals and the loudspeaker terminals.**

6 **Dialling if automatically initiated must commence within the minimum forced release time of Public Telephone Exchanges ie, 12 seconds from receipt of PSTN dial tone.**

7 The maximum time to receive dial tone after line seizure on the PSTN is one second, but for PABXs it may be longer.

8 A second dial tone may be encountered if the terminal is used on PABX extensions and the process of checking and waiting for dial tone will apply after the access digit has been dialled.

2 The computer sends TAPE START (3b/6) followed by a 2 second pause.

3 The computer sends the first page of data. This page is terminated with a TAPE PAUSE (3b/5).

4 The computer waits for a #from the user. The terminal may send this automatically after a suitable delay after the TAPE PAUSE (3b/5) or after data has stopped being received. The delay corresponds to the gap left between frames of data on the tape. (Typically 2 seconds.)

5 The computer sends subsequent pages as 3 and 4.

6 The computer sends the last page of the sequence terminated by TAPE PAUSE (3b/5), TAPE STOP (3b/7).

7 When replaying the tape, the TAPE PAUSE (3b/5) code may be used in the terminal to stop the tape and allow the user to read the page before proceeding to the next page.

8 TAPE START (3b/6) and TAPE STOP (3b/7) are used to control the tape motor during recording and are not necessarily stored on tape. They are not required to be decoded on replay.

Note: If the terminal is made capable of detecting the end of data, ie, binary 1 for 8 ms, both on record and playback then a manual system, independent of special frame sequence can be implemented.

5.4 PRINTER INTERFACE

A 20 pin universal interface plug and socket system is being standardised by CENELEC. It is intended for use between television receivers and similar equipment that may include a picture display and peripheral equipment. It is expected that this will result in the publication of a European standard during 1982, the technical process having been completed by the end of 1981.

This standard will specify signals (including the levels and impedances with the necessary tolerances) and the mechanical and electrical requirements of the plug and socket.

It is therefore recommended that this plug and socket system be used for connecting a printer to a PRESTEL Terminal at a convenient time when the standard has been agreed and published. Details will be included as soon as they become available. Nevertheless the specification for the composite video signal used below corresponds to the value included in the current draft of the CENELEC Standard.

Two arrangements are used in current printers and terminals for PRESTEL and Viewdata. One uses TTL levels for non-composite video signals and is associated with a 7 pin DIN plug. The other one uses signal levels commonly employed when handling video signals and is associated with an 8 pin DIN plug. Since some printers only require a composite video signal, for this application a suitable co-axial plug and socket may be used. However care must be taken to ensure that damage can not occur should inappropriate equipment be interconnected.

The connections to the socket and details of the signals are shown below.

7 PIN TTL INTERFACE

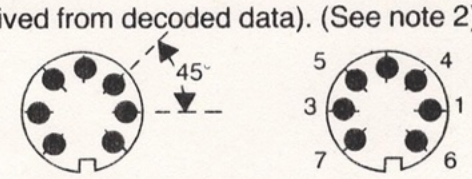

1 Composite Video, 1v p-p, ±3dB 75 ohms (derived from decoded data). (See note 2)
2 0v (Dot Clock Return).
3 0v (General Return).
4 Start Print TTL, See Note 1.
5 Mixed Sync, Negative Going, TTL.
6 Dot Clock, Rising Edge Active, TTL.
7 Monochrome (or Luminance) Video, Positive Going, TTL, (derived from decoded data).

Socket Corresponds to IEC 130-9A IEC-11

8 PIN VIDEO LEVEL INTERFACE

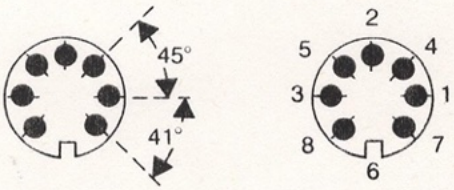

1 Start Print TTL, See Note 1
2 0v (Dot Clock Return).
3 0v (General Return).
4 Serial Data, TTL.
5 Composite Video, 1v p-p, ±3dB 75 ohms (derived from decoded data).
6 Dot Clock, Rising Edge Active, 0.7v p-p ±3dB 75 ohms.
7 Monochrome (or Luminance) Video, Positive Going, 0.7v p-p ±3dB 75 ohms.
8 Mixed Sync, Negative Going, 0.7v p-p ±3dB 75 ohms.

Socket Corresponds to Hirshmann type MAL 8'S.

CO-AXIAL SOCKET (e.g. BNC)

1 Composite Video, 1v p-p, ±3dB, 75 ohms, (derived from decoded data).

NOTE 1

START PRINT FUNCTION

Although this function is primarily intended to avoid the printer responding to inappropriate data, (e.g. FLASHING), the signal may be bidirectional. In this case the printer may hold this signal low to indicate to the terminal that certain functions are not to be present in the video signal output.

From the terminal suitable conditions may be used to start the printing function. The printer normally latches to a momentary ground. Lack of printer operation (e.g. absence of paper) may be indicated by the printer not latching this line low within a period of 100ms following the start printing command.

When the printer is not powered it should not influence the normal operation of the terminal.

It is to be noted that the functions described above are options and it is not expected that all printers will incorporate them all. Care must therefore be taken when associating a particular printer with a given terminal to ensure the required degree of compatibility.

NOTE 2

Other applications of this plug ground pin 1; the composite video signal on pin 1 should therefore be proof against damage if shorted to ground.

FIG 5a OPTIONAL TRANSMISSION CODES

NOTE: Columns 0, 1, 2, 3, 4, 5, 6 and 7 contain backward channel codes that may be used with alphanumeric keyboards.

Column 3b contains a set of control characters used from computer to terminal only for downloading pages automatically onto a tape recorder.

		b_7	0	0	0		0			1		1		1		1	
		b_6	0	0	1		1			0		0		1		1	
		b_5	0	1	0		1			0		1		0		1	
Bits b_7 b_6 b_5 b_4 b_3 b_2 b_1		Row \ Col	0	1	2	2a	3	3a	3b	4	4b	5	5b	6	6a	7	7a
0000		0			Sp					@		P		—		p	
0001		1			!					A		Q		a		q	
0010		2			"					B		R		b		r	
0011		3			£					C		S		c		s	
0100		4			$					D		T		d		t	
0101		5			%				Tape pause on playback	E		U		e		u	
0110		6			&				Tape start	F		V		f		v	
0111		7			'				Tape stop	G		W		g		w	
1000		8	Active Position Backward (APB)		(					H		X		h		x	
1001		9	Active Position Forward (APF)		)					I		Y		i		y	
1010		10	Active Position Down (APD)				:			J		Z		j		z	
1011		11	Active Position Up (APU)		+		;			K		—		k		¼	
1100		12	Clear Screen (CS)		,		<			L		½		l		‖	
1101		13	Active Position Return (APR)		—		=			M		—		m		¾	
1110		14		Active Position Home (APH)	.		>			N		↑		n		÷	
1111		15			/		?			O				o			

6 SAFETY REQUIREMENTS

6.1 GENERAL

The manufacturer must satisfy British Telecom that the equipment meets the safety requirements given below. The requirements call for protection of the telephone line from both longitudinal and transverse voltages which could arise from faults in the equipment.

6.2 CERTIFICATION OF PROTECTION COMPONENTS

Any device used for protecting the Telephone line (eg the transformer, relays, fuse and gas discharge tube in Fig 6a must be clearly identified and specified and each type of device certified by its manufacturer as having been tested to and met the requirements given below. The certification must give all appropriate information and test figures and must accompany the initial request for permission to connect the terminal to line.

6.3 TRANSFORMER CONSTRUCTION

(Quoted from BS 3535:1962.) "The barrier transformer shall be so designed and constructed that there is no possibility of any connection between input and output windings either directly or through other metal parts. In particular, precautions shall be taken to prevent

i. Displacement of input or output windings or the turns thereof, or of wires for external connections,

ii. Undue displacement of parts of windings or internal wiring in the event of rupture or loosening of connections. Random windings shall not be used.

Input and output windings on a single spool, side by side or concentric, shall not be used. The windings must be in accordance with one of the following methods:

a. On a single spool with a partition wall between windings, provided that the spool and partition wall are pressed or moulded in one piece.

b. On separate spools fixed so that the spools cannot move with respect to each other and to the core.

c. On cheekless formers on separate limbs of the core provided that each layer of the winding is interleaved with insulating material projecting beyond the ends of each layer, and that the windings are impregnated with a hard baking material which fully penetrates the interstices and effectively seals off the end turns.

Accessible metal parts shall be separated from live parts by double insulation except that reinforced insulation may be used on connector sockets, switches and the like where double insulation is not practicable."

6.4 PROTECTION AGAINST LONGITUDINAL VOLTAGES

The isolation between connections on either side of the barrier line (Fig 6a) and between any of those connections and any point on the exterior of the barrier components must be (1400 + 2 V) volts, minimum 2.8 kV, V being the highest voltage (occurring anywhere in the terminal) which is not certified as being segregated as in Para 6.7.

The isolation test consists of applying (1400 + 2 V) volts — minimum 2.8 kV — to the points concerned for 60 seconds and either:—

7 ATTACHMENT EVALUATION

7.1 ATTACHMENT OF PRIVATE EQUIPMENT TO BRITISH TELECOM MAINTAINED PLANT

All private equipment intended for connection to British Telecom maintained plant must first be evaluated by British Telecom to ensure that it conforms to the requirements in Technical Guides Nos. 26 and 30 and this Specification. Where there are differences between the Technical Guides and this Specification, the latter shall prevail. Under the terms of the Post Office Telecommunication Scheme 1976 made under Section 28 of the Post Office Act 1969 each subscriber requires the written consent of British Telecom before any private attachment is connected to his installation.

In many cases the use of a private attachment connected to British Telecom maintained plant requires a British Telecom licence under Section 27 of the Post Office Act 1969. Where such a licence is necessary the written consent of British Telecom may bring the system within the coverage of the relevant British Telecom General Licence for Private Attachments to British Telecom Telecommunication Installations.

Applications by suppliers for the evaluation of their equipment should be made in the first instance to:

Prestel Headquarters
Prestel 4.1.2.1
Telephone House
Temple Avenue
London EC4Y 0HL

Subsequent applications should be made to:

British Telecom Headquarters,
ME/RCS 1.2.1.1.,
Tenter House,
45, Moorfields,
LONDON EC2Y 9TH.

Charges will be raised for the evaluation of attachments and will vary with the amount of British Telecom resources required; they will normally range from £50 to £950 (plus VAT). In particularly complex cases, however, a specially assessed charge exceeding £950 may be made. Applicants will be notified of the charge following receipt of the application. Evaluation will not commence until a form of undertaking accepting the charge has been signed and returned to British Telecom. The full charge will be payable whether or not the device is found to be technically acceptable. A charge will be payable if an application is withdrawn at any stage subsequent to the acceptance of the charge. It should be noted that payment will not necessarily ensure British Telecom consent to the use of the equipment in question. Basic charges allow for a limited degree of retesting after new attachments have been modified during the evaluation stage. It will nevertheless be in the interest of the applicants to ensure that equipment is likely to meet British Telecom requirements before being submitted for evaluation; significant periods of prior consultation will however be taken into account when individual charges are assessed. When an attachment has been found technically acceptable British Telecom proceeds in one of two ways. If the attachment is to be generally available British Telecom will either take a formal agreement with the manufacturer or require the acceptance of certain terms and conditions in which case customers requests for connection of the equipment can be dealt with by the local British Telecom staff. The formal agreement document is shown in Appendix 2.

If the private equipment is unique or falls within certain limited categories each application to connect it to British Telecom plant will be dealt with by Prestel Headquarters. British Telecom only enters into such agreements with companies who have a registered place of business in the United Kingdom.

Once evaluated, private attachments must not be modified from the equipment submitted for evaluation without British Telecom agreeing in writing to such modification.

British Telecom accepts no responsibility for the satisfactory performance of the attachment. Attachments are not normally evaluated for performance, reliability or quality of service parameters and hence permissible equipment should not be described as 'British Telecom Approved'.

British Telecom reserves the right to revise its requirements at any time and gives notice regarding such changes. No new private attachment will be permitted connection to British Telecom maintained plant after the expiry date of such notice unless it complies with the new requirements. The supplier shall carry out modification to new attachments arising from such changes at his own expense.

7.2 ATTACHMENT TO TERMINALS

Any acceptable device used for protecting the telephone line as detailed in Section 6 can be considered sufficient protection against connection of peripheral equipment containing voltages up to normal mains supply (240V ac RMS, 360V peak or dc). However British Telecom reserves the right to control the supply and use of peripheral equipment in this category if a significant degree of interference is identified in the light of experience.

Peripheral equipment containing voltages in excess of mains voltage should be submitted by the supplier as for other types of private equipment (see 7.1).

7.3 ENGINEERING CHANGES

The manufacturer will be required to appoint an engineer who will be responsible for identifying any relevant changes in the design or manufacture of the terminal and notifying Prestel 4.1.2 of them in writing. "Relevant" shall mean those changes which affect British Telecom areas of concern as outlined in this specification. In cases of doubt about the relevance of a change an informal enquiry should be made to Prestel 4.1.2.1.

7.4 TECHNICAL APPROVAL

7.4.1 Check List

The following check list (Table 7a) is used by British Telecoms Attachment Evaluation Group when checking Prestel Terminals.

The list contains references to the relevant section within the Terminal Specification. Before these checks are made the equipment submitted for approval must comply with the mandatory display characteristics and character set indicated in Section 2, and the telephone and identity number policies in Section 8 of this specification.

7.4.2 Autodialler Test

A spark quench circuit across the pulsing contacts is recommended. This consists typically of a capacitance of 2 microF in series with a resistance of 30-100 ohms.

The test conditions used when determining the repetition rate and ratio of autodialling signals are as follows:—

1 The terminal is connected via Plug Points 2 and 3 to a non-reactive d.c. supply having a potential of 10 to 50 volts and a resistance such that the current which flows during the make period is less than 100 mA.

2 Each pulse of the pulse train must be within the repetition rate and ratio stated above. The break period is taken as the time between the instant when the steady state current commences to fall and the instant when the current commences its final rise.

TABLE 7a ATTACHMENT APPROVAL CHECK LIST

DISPLAY		RELEVANT SECTION
a.	Alphanumeric	Table 2a, Col 2, 3, 4, 5, 6 and 7
b.	Mosaic	Table 2a, Col 2a, 3a, 4a, 6a and 7a
TRANSMISSION		
a.	Frequency Check Binary 0 and Is	3.1.1 and 3.1.2
b.	Spectrum (Transverse)	Fig 3a and 3b
c.	Spectrum (Longitudinal)	3.1
d.	Transmitted Level	3.1
e.	Carrier Detect/Fail	3.1.2
SIGNALLING		
a.	Line State resistance	4.2
b.	Impedance	4.3
c.	Loudspeaker Monitoring	4.5.2, 4.5.4 and 4.5.10
d.	Crosstalk Interference	4.5.3
e.	Attenuation above 10KHz	4.5.5
f.	Data ready to receive	4.5.11
g.	Telephone in use indication	4.5.13
h.	Clear Connection	4.5.14
i.	Revert to off line condition	4.5.15
g.	Power Off	4.5.16
k.	Manual Dialling	4.6
SAFETY REQUIREMENTS		
a.	Certification of Components	6.2
b.	Transformer Construction	6.3
c.	Protection against Transformer/Longitudinal Voltages	6.4 and 6.6
d.	Bridging across the barrier line	6.5
e.	Gas Discharge tube	6.6.3.1.
f.	Fuse	6.6.3.2.
g.	Relays	6.4
h.	HV Protection	6.7
i.	Peripheral Socket Outlets	6.8
POLICY REQUIREMENTS		
a.	Telephone numbers	8.1
b.	ID numbers	8.2
c.	Programming ID numbers	8.3.1.
d.	Programming Telephone numbers	8.3.2
e.	Remote Programming Protocol	8.3.3

8 BRITISH TELECOM POLICY

8.1 TELEPHONE NUMBERS

The autodialler may dial up to 4 separate Viewdata services served by a maximum of six telephone numbers — A:B:C:D:E and F. For access to Prestel, two telephone numbers (A and B) shall be provided, and required to be stored, enabling access to two identical Prestel databases to give the user security of service in case of disaster or network congestion. If the maximum facility is adopted then the first choice shall access the Prestel pair of numbers. The second choice accessing another pair of numbers C and D with the third and fourth choice accessing E and F respectively. NOTE: each of the four choices may access a single number in which case they will access A, B, E and F. If the two Prestel access numbers are controlled by one user service option, as opposed to a separate selection for each number, the first number (A) will be used on the first call after power-up. The second number (B) will be used on the next attempt at contacting Prestel. Subsequently, A and B will be used alternately for successive calls until the terminal is switched off. Alternatively, a truly random initial calling of A or B will be used. British Telecom will require to know which method is employed. Manufacturers wishing to submit terminals with a different arrangement of telephone numbers within the confines of the conditions of the above paragraph should contact Prestel 4.1.2.1.

8.2 IDENTITY NUMBER

When the terminal is connected to the Prestel system and receives ENQ(0/5) it shall begin to transmit the Prestel identity number to the computer within 50 ms. This identity number will take the form of a string of up to 16 digits and shall be sent in the same format as normal data at 75 bits. After transmission of this ENQ(0/5) the computer will await transmission of the identity number from the terminal. If a non-valid identity number is received by Prestel the computer will resend ENQ(0/5). On receipt of ENQ(0/5), whilst connected to the Prestel system, the terminal shall be inhibited from transmitting any information except the Prestel identity number. This period of inhibition shall only cease when the identity code has been transmitted in its entirety. The terminal shall not display the Prestel terminal identity number.

8.3 PROGRAMMING

8.3.1 Programming of ID Numbers

British Telecom requires that the Prestel identity number be remotely programmable, as described in Paragraph 8.3.3. On giving reasonable notice to the user, British Telecom may require a change in the Prestel identity number.

8.3.2 Programming of Telephone Numbers

Programming of the Prestel access telephone numbers (see Note 1) shall be performed either locally (see Note 2) or both locally and remotely.

Note 1 — British Telecom retains the right to change the telephone numbers provided for Prestel access on giving reasonable notice to users.

Access telephone numbers may change for a number of reasons, for example:—

— Modernisation of the telephone network involving a new telephone numbering scheme,

— Modernisation of the telephone exchanges serving either customer or Prestel computer (or both),

— Implementation of revised telephone traffic routings to accommodate traffic efficiently as it grows,

— The opening of a Prestel computer nearer to a customer than the computer which already serves him

— Movement of the customer to another telephone exchange area.

Customers may be affected by any one of the above reasons or by any combination of them. Some customers, particularly in large cities, may very seldom be affected at all. It is not, therefore, possible to assess the likelihood or frequency of changes.

Note 2 — In order to avoid committing British Telecom or TV dealer resources when access code changes occur, it is necessary that "local programming" be interpreted as programming by the customer using his keypad. The procedure shall be readily understandable to the customer but not so readily effected that the keypad can be used as a press-button dialler.

8.3.3 Remote Programming Protocol
Programming data will be sent down the telephone line from the local Prestel Centre.

When a new terminal is installed the user or dealer will call the Centre and give name, address, telephone number and any necessary information about the set eg manufacturer, type number etc.

The Centres will call the user back (to verify the telephone number) ask the user to put the terminal on-line and start the programming routine. After the programmed numbers have been checked by the centre the terminal will be ready for use.

The programming routine is entered by a 4 character sequence ESC-1, ESC-2. This puts the terminal into Programme-Verify mode (see Fig 8a). The memory is divided into seven 16 character blocks. A skip block command ESC-3 is used to skip through the blocks. Default is Block 1 at entry to Programme-Verify mode. After a number (0-6) of skip block commands, Verify mode may be selected by ENQ, or Programme mode may be selected by ESC-4.

Entry of Verify mode shall cause the terminal to transmit down the telephone line the contents of the current block (excluding any space-filling characters) at 75 bit/s and then revert to normal mode.

Programme data shall follow ESC-4 using the Numbers 0-9 for the Identity Code and the codes given below for telephone numbers. Character 3/15 (?) will be used as a space-filling character after valid data characters to make the total number of characters in a block equal to 16. 3/15 (?) may also be used between parts of the number to identify "natural" breaks. It may then be displayed as a space if the number is displayed for the user, eg – :1?618?1111???? displayed as 01 618 1111. Please note that the terminal I.D. must not be displayed on the screen.

After receiving these 16 characters the terminal reverts to normal mode.

Any parity error or any character not defined in the above sequences (except NUL which may occur at any time in asynchronous transmissions) shall cause the terminal to revert to normal mode. The memory should not be programmed until a complete block has been successfully received. During Programme mode, writing into the display memory shall be inhibited.

1 FUNCTIONAL DESCRIPTION

The following list briefly describes how a Prestel Terminal is required to interact with the Information Retrieval Computers in establishing a connection and then displaying pages of information.

The terminal is connected to the telephone system by means of a jack plug . . . . . Section 4.1

The terminal is switched on and a Prestel call is initiated . . . . . Section 4.5

The Prestel computer answers the call and sends a 1300 Hz tone. This is one of the 2 frequencies used by the computer to send binary data to the terminal . . . . . Section 3.1

Initial call progress is monitored by the user . . . . . Section 4.5

For a successful call the terminal returns a 390 Hz tone to the computer. This is one of the 2 frequencies used in the return channel . . . . . Section 3.1

The computer then begins to send data to the terminal at 1200 bit/s . . . . . Section 3.1

The computer sends a code (ENQ) requesting the terminal's identity and the terminal responds by sending a Prestel identification number of up to 16 digits . . . . . Section 8.2

The computer checks this number and then sends data to be displayed on the screen in a 24 row, 40 character format . . . . . Section 2.1 and 2.2

The codes used are based on the British Teletext variant of the ISO 646 7-bit code standard . . . . . Section 2

Control characters are used to clear the screen and to control the position and display of the cursor . . . . . Section 2.3

The user presses the appropriate keys according to the information displayed on the screen . . . . . Section 2.4

This sends data to the computer at 75 bit/s . . . . . Section 3.1

The user may clear the call at any time . . . . . Section 4.5

2 CHARACTER CODES AND DISPLAY

2.1 Data Format

Each character sent to line consists of 10 bits in the following sequence:-

Start bit ..... binary 0

Bit 1)
2)
3)
4) ..... representing the character code
5)
6)
7)

Parity bit (even) ..... this will be either:-
i. binary 1 if the 7 bit character code comprises odd number of binary 1s.
ii. binary 0 if the 7 bit character code comprises even number of binary 1s.

Stop bit ..... binary 1. This may be followed by a delay of arbitrary length and then the start bit of the next character. The delay is normally zero during continuous data streams.

2.2 Display Characters

Alphanumeric characters and mosaic symbols are displayed on the screen in 24 rows of 40 characters making a total of 960 character positions. The precise shape of the character is not defined. Each character is to be displayed in the position following the previous character and the character received after the last character on a row is to be displayed as the first character in the next row. The top row is regarded as the row following the bottom row. The terminal is required to check for parity and if an error is detected a readily identifiable symbol shall be displayed on the screen instead of the erroneous received character. (See Section 9.3 for recommended symbol).

The character codes which the terminal must be capable of receiving are shown in Table 2a.

THE GO CHARACTER SET in Columns 2, 3, 4, 5, 6 and 7 contain alphanumeric characters which are stored and displayed.

The MOSAIC CHARACTER SET includes Columns 2a, 3a, 6a and 7a (mosaic symbols) plus the blast-through alphanumeric characters of Columns 4 and 5 which are stored and displayed. The mosaic character set uses the same 7 bit code table as the GO character set but is selected for display by a preceding ESC (1/11) plus a mosaic control character (5b/1-5b/7).

2.3 Control Characters

2.3.1 The CO CHARACTER SET in Columns 0 and 1 contain cursor control, escape, enquiry and time filling characters which are not stored or displayed.

The cursor control characters control the position and display of the cursor. The cursor marks the character position in which the next received character will be displayed. It shall be made visible on the screen when the CURSOR ON (CON, 1/1) is

received. It shall be made invisible when the CURSOR OFF (COF, 1/4) is received. When visible it shall be easily recognisable as the cursor but shall not render invisible any character currently located on the cursors position. The codes which move the cursor are as follows:-

ACTIVE POSITION BACKWARD (APB,0/8)	— moves the cursor left one character position.
ACTIVE POSITION FORWARD (APF,0/9)	— moves the cursor right one character position.
ACTIVE POSITION DOWN (APD,0/10)	— moves the cursor down one row.
ACTIVE POSITION UP (APU,0/11)	— moves the cursor up one row.
CLEAR SCREEN (CS,0/12)	— moves the cursor to the first character position of the top row and clears the page memory. The terminal shall be ready to receive the next display character 30 ms after receiving CLEAR SCREEN.
ACTIVE POSITION RETURN (APR,0/13)	— moves the cursor to the first character position of the current row.
ACTIVE POSITION HOME (APH,1/14)	— moves the cursor to the first character position of the top row.

For all cursor movements the first character of each row is regarded as contiguous with the last character of the previous row, and the top row is regarded as the row following the bottom row.

TIME FILLING (NUL,0/0),	for example, may be used after CLEAR SCREEN to allow time for clearing the screen. No action is required by the terminal.
ENQUIRY (ENQ,0/5),	is sent to request the terminal to send its Prestel identity code (see para 8.2).
ESCAPE (ESC, 1/11),	is used to prefix Columns 3, 4 and 5 thereby selecting the characters in Columns 3b, 4b and 5b.

2.3.2 The C 1 DISPLAY ATTRIBUTE CHARACTER SET in Columns 4b and 5b contain the characters used to modify the appearance of the subsequent characters on the same row of the display. These characters are stored, but not displayed. The display modes are identical to those of the Broadcast Teletext Specification (Sept 1976) except that Prestel does not use "start box" and "end box". All terminals must be capable of receiving this character set but it is at the manufacturers discretion whether to incorporate these display modes into the terminal design. (For example a Black and White display would not respond to the display colour codes 4b/1·7).

The display modes are listed in Table 2b as complementary pairs; those on the left are

assumed at the start of every row. The control character codes listed with each mode are used to initiate that mode.

Some control characters have immediate effect ('set at') in that the new mode obtains for and from the corresponding character rectangle, others have subsequent effect ('set after') when the new mode obtains for and from the next character rectangle. A later control character takes precedence over an earlier one.

When a control character signifies a change into a mode which is already obtaining, that mode generally continues uninterrupted throughout the corresponding character rectangle (but see NEW BACKGROUND, 5b/13).

In general the character codes of a row are sufficient to define the entire display of that row (but see DOUBLE HEIGHT, 4b/13).

The interpretation of the display modes is detailed below.

DISPLAY COLOUR (4b 1-7) AND (5b 1-7)
One of the seven colours white, yellow, cyan, green, magenta, red, blue is used to depict the display character in the character rectangle. Seven pairs of control characters are available so that the display colour and/or the alphanumeric/mosaic mode may be changed by a single control character. There is a direct correspondence between bits b1, b2, b3 of these codes and the red, green and blue components of the colours.

FLASH (4b/8)
All characters in the flash mode are intended to be displayed alternately as they would otherwise be displayed, and as spaces, under the control of a timing device in the terminal. The flash mode is released by STEADY (4b/9).

DOUBLE HEIGHT (4b/13)
Whenever the double height mode occurs the information in that row is sufficient to define the display of that row and the row of next higher address. A terminal responding to the double height mode on a row must ignore any information received for the row of next higher address, but a terminal not responding to this mode will operate normally on both rows. The double height mode is released by NORMAL HEIGHT (4b/12).

A terminal responding to one or more occurrences of the double height mode in row 'R' will operate as otherwise during that row except that in every character rectangle during the double height mode only the upper half of what would otherwise have been displayed is displayed, stretched vertically to fill the rectangle. On row 'R + 1' the corresponding lower half of each of these is similarly displayed. The remaining character rectangles of 'R + 1' are to be displayed as spaces in the same background colour as the corresponding rectangles of row 'R'.

CONCEAL (5b/8)
All characters in the conceal mode are intended to be displayed as spaces until the reveal mode is restored by user control.

NEW BACKGROUND (5b/13)
The background colour of the character rectangles is black during the BLACK BACKGROUND mode (5b/12). Whenever the new background control character (5b/13) occurs the display colour then obtaining is adopted as the background colour in the new background mode.

HOLD MOSAIC (5b/14)
Generally all control characters are displayed as spaces, implying at least one space between rectangles with different display colours in the same row. The hold mosaic mode allows a limited range of abrupt display colour changes by calling for the display of a held mosaic character in the rectangle corresponding to any control character occurring during the mosaic mode. This held character is displayed in the modes obtaining for the rectangle in which it is displayed, except for the contiguous/separated mode which forms part of the structure of the held mosaic character.

The held mosaic character is only defined during the mosaic mode. It is then the most recent character in Columns 2a, 3a, 6a or 7a providing that there has been no intervening change in either the alphanumeric/mosaic or the normal/double height modes. This character is to be displayed in the contiguous or separated mode as when it was first displayed. In the absence of such a character the held mosaic character is taken to be a space. The hold mosaic mode is released by RELEASE MOSAIC (5b/15).

CONTIGUOUS MOSAICS
The contiguous mode (5b/9) is the display mode in which the six cells of the mosaic characters fill the character rectangle (see Fig 2a).

SEPARATED MOSAICS
The separated mode (5b/10) is the display mode in which there is a background colour boundary around and between the six cells of the mosaic characters within the character rectangle (see Fig 2a).

2.4 Backward Channel Characters

To use the basic Prestel Service the numbers 0-9 (3/0-3/9) star (*,2/10) and Square (#,5/15) are the only characters required. (See Section 9.1 for recommended keypad layout.) Additional backward channel codes may be transmitted under the control of a alphanumeric keyboard. (See Section 5.1.)

2.5 Remote Programming Characters

Column 3b in Table 2a contains the character codes used in remote programming of the terminal identification (ID) number. No two codes from Column 3b will be transmitted in any 20 ms period. A detailed description of their use is included in Section 8 of this specification.

2.6 Undefined Character Codes

Individual codes not illustrated in Fig 2a have an undefined response and may be used for unspecified purposes. Any terminal not specifically designed to exploit any of these codes shall take no action on their receipt.

TABLE 2A PRESTEL TRANSMISSION CODES

NOTE:

Columns 0 and 1 form the CO control character set.

Columns 4b and 5b form the C1 set of display attribute control codes.

Columns 2, 3, 4, 5, 6 and 7 form the GO character set.

Columns 2a, 3a, 4, 5, 6a and 7a form the Mosaic character set. The shaded area represents foreground colour.

Bits b_7 b_6 b_5 b_4 b_3 b_2 b_1	Row \ Col	0	1	2	2a	3	3a	3b	4	4b	5	5b	6	6a	7	7a
	b_7	0	0	0		0			1		1		1		1	
	b_6	0	0	1		1			0		0		1		1	
	b_5	0	1	0		1			0		1		0		1	
0000	0	NUL		Sp		0			@		P		—		p	
0001	1		Cursor on	!		1		Set verify mode (1)	A	Alphanumeric Red	Q	Mosaic Red	a		q	
0010	2			"		2		Set verify mode (2)	B	Alphanumeric Green	R	Mosaic Green	b		r	
0011	3			£		3		Skip block	C	Alphanumeric Yellow	S	Mosaic Yellow	c		s	
0100	4		Cursor off	$		4		Set programme mode	D	Alphanumeric Blue	T	Mosaic Blue	d		t	
0101	5	ENQ		%		5			E	Alphanumeric Magenta	U	Mosaic Magenta	e		u	
0110	6			&		6			F	Alphanumeric Cyan	V	Mosaic Cyan	f		v	
0111	7			'		7			G	Alphanumeric White	W	Mosaic White	g		w	
1000	8	Active Position Backward (APB)		(		8			H	Flash	X	Conceal Display	h		x	
1001	9	Active Position Forward (APF)		)		9			I	Steady	Y	Contiguous Mosaics	i		y	
1010	10	Active Position Down (APD)		*		:			J		Z	Separated Mosaics	j		z	
1011	11	Active Position Up (APU)	ESC	+		;			K		←		k		¼	
1100	12	Clear Screen (CS)		,		<			L	Normal Height	½	Black Background	l		‖	
1101	13	Active Position Return (APR)		—		=			M	Double Height	→	New Background	m		¾	
1110	14		Active Position Home (APH)	.		>			N		↑	Hold Mosaics	n		÷	
1111	15			/		?			O		#	Release Mosaics	o			

TABLE 2B DISPLAY ATTRIBUTE CONTROL CODES

DISPLAY MODE		SET AT	SET AFTER	COMPLEMENTARY DISPLAY MODE		SET AT	SET AFTER
ALPHANUMERIC		Row Start	4b/1 4b/2 4b/3 4b/4 4b/5 4b/6 4b/7	MOSAIC		—	5b/1 5b/2 5b/3 5b/4 5b/5 5b/6 5b/7
CONTIGUOUS		Row Start 5b/9*	5b/9*	SEPARATED		5b/10*	5b/10*
DISPLAY COLOUR	includes RED	Row Start	4b/1 4b/3 4b/5 4b/7 5b/1 5b/3 5b/5 5b/7	DISPLAY COLOUR	excludes RED	—	4b/2 4b/4 4b/6 5b/2 5b/4 5b/6
	includes GREEN	Row Start	4b/2 4b/3 4b/6 4b/7 5b/2 5b/3 5b/6 5b/7		excludes GREEN	—	4b/1 4b/4 4b/5 5b/1 5b/4 5b/5
	includes BLUE	Row Start	4b/4 4b/5 4b/6 4b/7 5b/4 5b/5 5b/6 5b/7		excludes BLUE	—	4b/1 4b/2 4b/3 5b/1 5b/2 5b/3
BLACK BACKGROUND		Row Start 5b/12	—	NEW BACKGROUND		5b/13**	—
REVEAL		Row Start User Control***	4b/1 4b/2 4b/3 4b/4 4b/5 4b/6 4b/7 5b/1 5b/2 5b/3 5b/4 5b/5 5b/6 5b/7	CONCEAL		5b/8	—
STEADY		Row Start 4b/9	—	FLASH		—	4b/8
NORMAL HEIGHT		Row Start 4b/12	—	DOUBLE HEIGHT		—	4b/13
RELEASE		Row Start	5b/15	HOLD		5b/14	—

*these codes may take effect 'at' or 'after' their occurrence,
**whenever this code occurs the Display Colour is adopted as the new Background colour,
***the Reveal mode may be maintained throughout a page by a user control,

FIG 2A EXAMPLES OF ALPHANUMERIC AND MOSAIC DISPLAYS

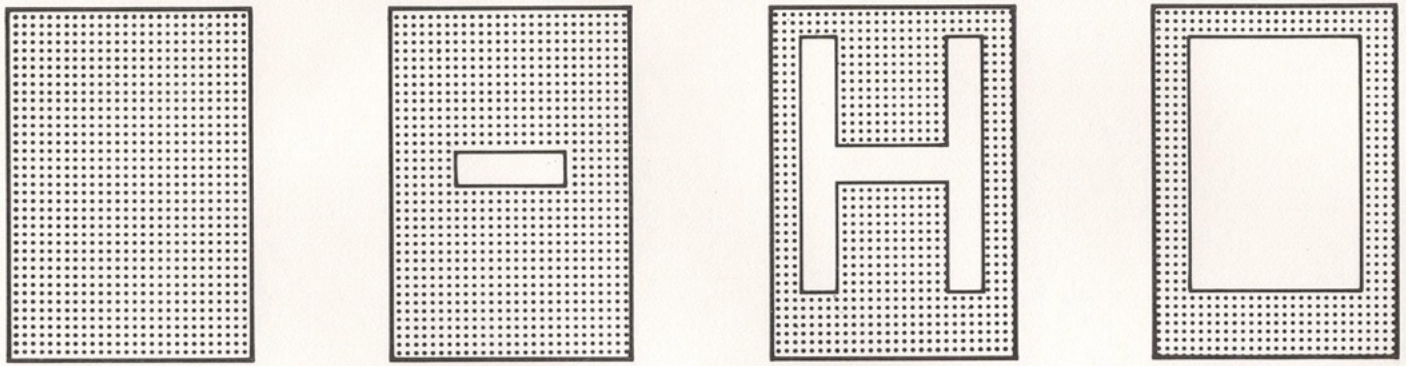

Alphanumeric and Mosaic 'Space' Character 0000010

Alphanumeric Character 1011010

Alphanumeric or Blast-Through Alphanumeric Character 0001100

Alphanumeric Character 1111111

KEY

Background Colour

Display Colour

Contiguous Mosaic Character 0110111

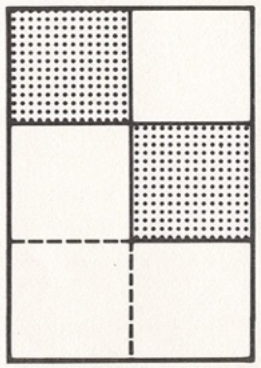

Separated Mosaic Character 0110111

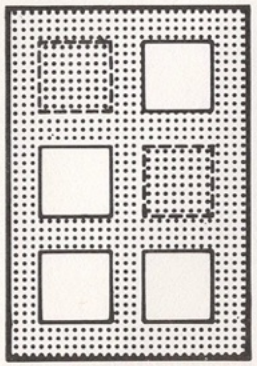

Separated Mosaic Character 1111111

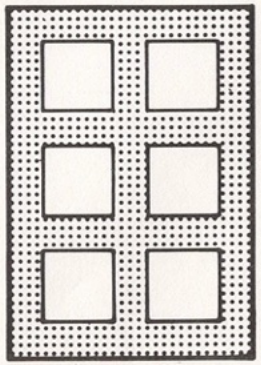

Contiguous Mosaic Character 1111111

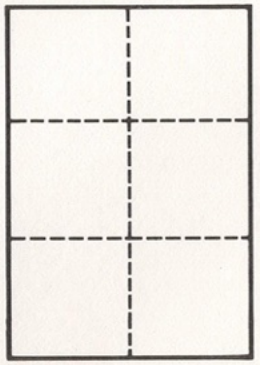

Note: Character Bytes are listed as transmitted from b_1-b_7.

3 MODEM AND LINE CHARACTERISTICS

3.1 Modem Characteristics

System of Modulation	**: Frequency-shift keying (FSK)**
Operation	**: Asymetric Full Duplex**

3.1.1 Transmit Channel (to computer)

In the transmit mode a nominal mean frequency of 420 Hz with a 30 Hz shift is used to produce:—

Characteristic Frequency	**: Binary 0: 450 Hz ± 5 Hz** **: Binary 1: 390 Hz ± 5 Hz**
Data Rate	**: 75 bits per second ± 1%**
Output Level	**: Maximum of −9 dBm in 600 ohm resistive termination**
	: For minimum level refer to Section 3.2.1 and Fig 3c.
Spectral Output	**: Levels of the characteristic frequencies and any harmonic components shall conform to the limitations imposed by Fig 3a. Individual spectral components above 3.4 kHz shall conform to Fig 3b. Both of these criteria apply to transverse components (ie across Plug Points 2 and 3) measured in 600 ohms. Longitudinal components (Plug Points 2 and 3 shorted and measured relative to earth) into a 600 ohm resistive load shall be below −40 dBm at all frequencies between 2 kHz and 2 MHz.**

3.1.2 Receive Channel (from computer)

In the receive mode a nominal mean frequency of 1700 Hz with a 400 Hz shift is used to produce:—

Characteristic Frequencies	**: Binary 0: 2100 Hz ± 16 Hz** **: Binary 1: 1300 Hz ± 16 Hz**
Data Rate	**: 1200 bits per second ± 0.1%**
Maximum Input Level	**: Not to exceed −13 dBm in a 600 ohm resistive termination**
Carrier Detect Level (The modem must accept carrier signals greater than the carrier detect level.)	**: ≤ −39 dBm at 1300 Hz (Binary 1) measured in 600 ohm resistive termination**
	: ≤ −41 dBm at 2100 Hz (Binary 0) measured in 600 ohm resistive termination.
Min Carrier Fail Level	**: −53 dBm for > 600 ms (Binary 1 (1300 Hz) or Binary 0 (2100 Hz) in 600 ohm resistive termination.**

Note: No minimum error performance for the modem is specified but a detailed specification for line simulation test networks to test the error rate performance can be supplied to manufacturers on request.

3.2 Line Characteristics

3.2.1 Line Losses

Data signals from the terminal and the computer centre will be attenuated by the telephone line. The worst case attenuation likely to be experienced on any connection to the Prestel computer centre is given in Fig 3c. The attenuation can be assumed to be between zero and the limits shown. Data signals will be accepted by the computer provided that the signal level at the computer end is greater than −43 dBm. The computer modem transmit level is −13 dBm.

It should be noted that connections to other computers (not Prestel) may exhibit greater loss than that shown in Fig 3c. Therefore Prestel Terminals that are designed to operate additionally to other computers via the PSTN should take account of CCITT recommendation V23 and Technical Guide 30 which allows for the increased line attenuation that may be encountered.

3.2.2 Line Group Delay

Although Group Delay is not expected to be a problem on calls to the Prestel centre, the worst case line characteristic likely to be encountered is shown in Fig 3d.

3.3 External Modems

British Telecom has allowed Prestel modems to be an integral part of the Prestel Terminal but it is possible to use a British Telecom Datel 600 Modem to connect to Prestel.

Manufacturers of terminals who want to connect to Prestel may favour a British Telecom Modem rather than develop an acceptable integral modem for their equipment. **Providing their equipment is capable of satisfying the mandatory display requirements set out in Section 2 plus the telephone and identification number policies in Section 8 then permission to attach will be assessed in accordance with Technical Guides 2 and 5 as for connection to British Telecom Datel 600.**

Fig 3a Maximum one-minute mean power level of individual spectral components of the output signal from apparatus connected to the Public Switched Telephone Network

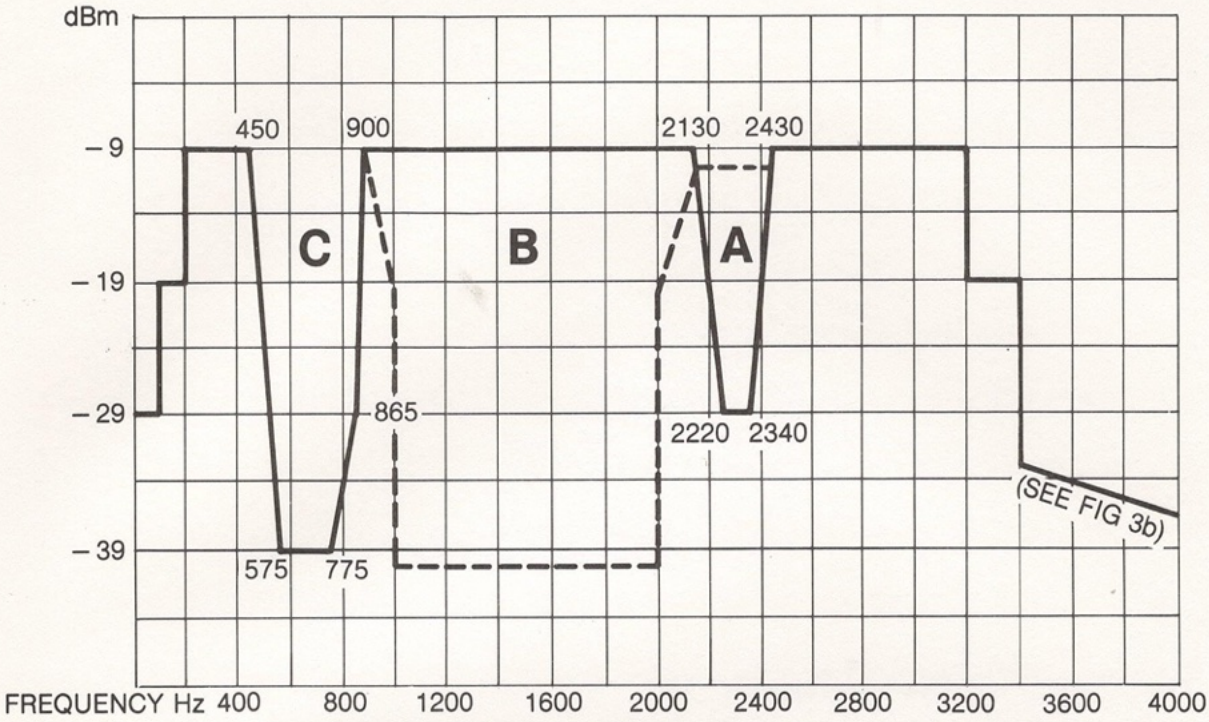

Notes: (1) Signals are permitted in Area A only if accompanied by signals in Area B at a power level not lower than 12 dB below the power level of the signal in Area A.

(2) Signals are permitted in Area C provided that there is no false operation of trunk signalling equipment (SSAC 1).

Fig 3b Maximum power level of individual spectral components above 3.4 kHz of the output signal from apparatus connected to voice-band circuits

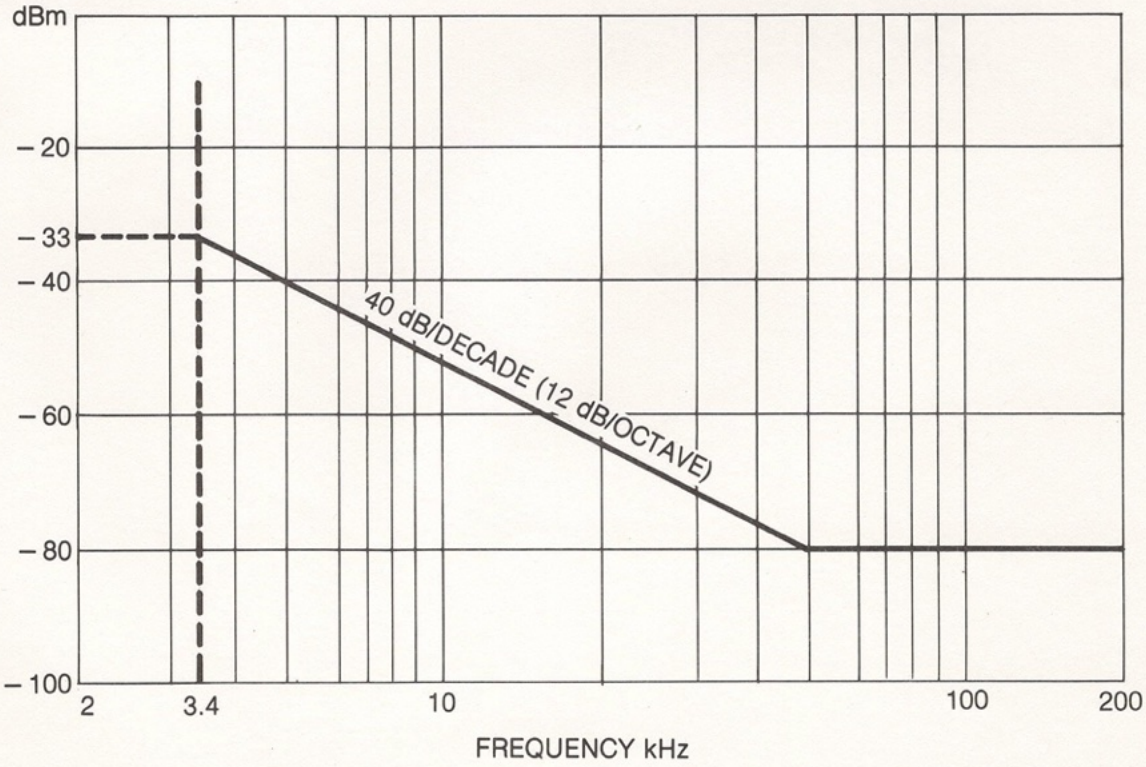

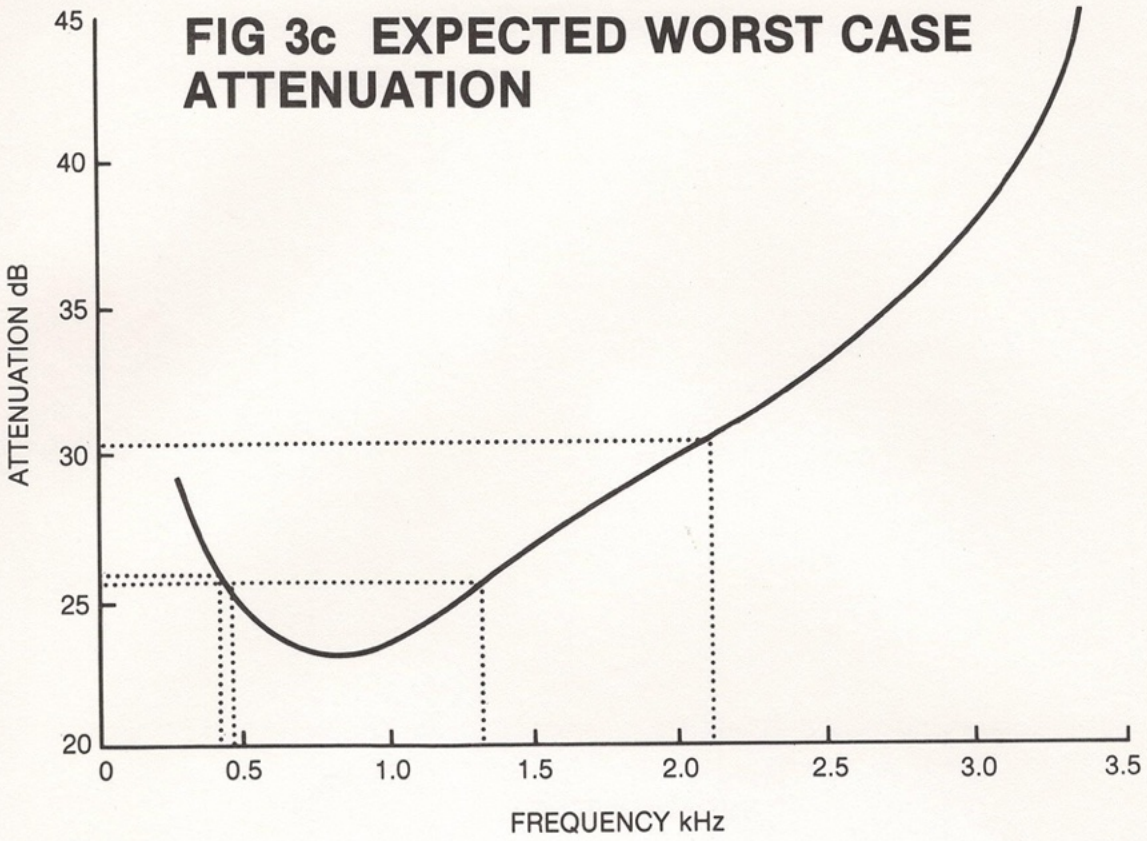
FIG 3c EXPECTED WORST CASE ATTENUATION
ATTENUATION dB
45
40
35
30
25
20
0
0.5
1.0
1.5
2.0
2.5
3.0
3.5
FREQUENCY kHz

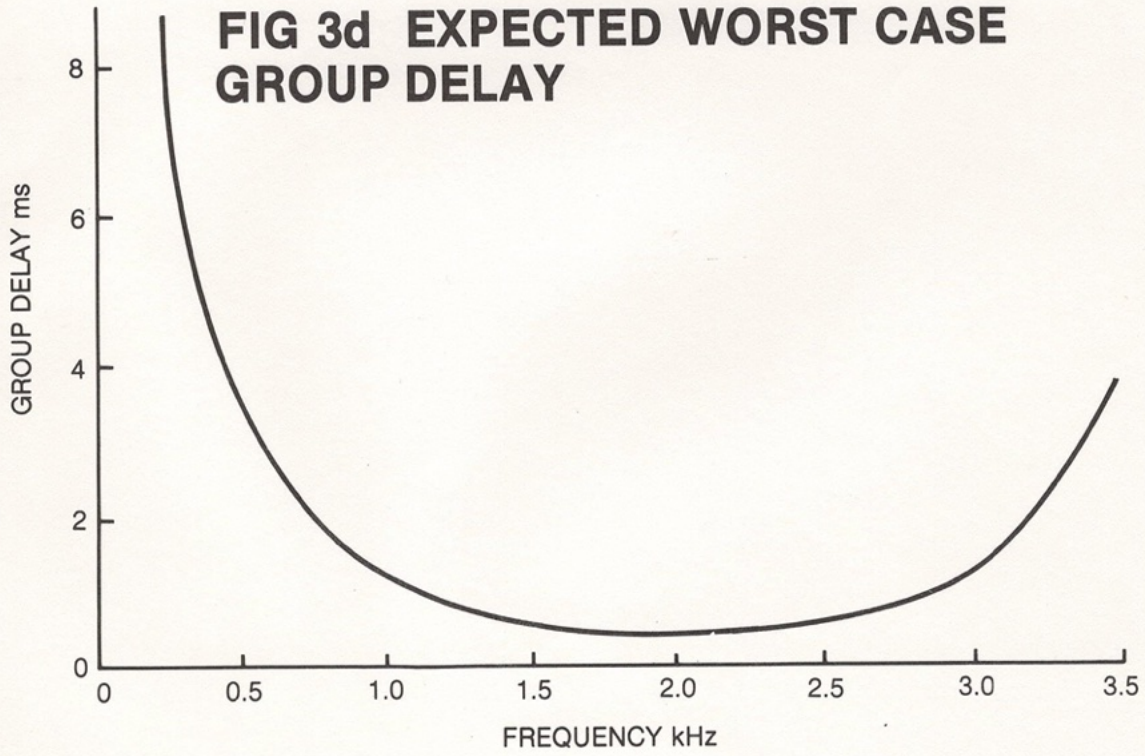
FIG 3d EXPECTED WORST CASE GROUP DELAY
GROUP DELAY ms
8
6
4
2
0
0
0.5
1.0
1.5
2.0
2.5
3.0
3.5
FREQUENCY kHz

4 TELEPHONE LINE INTERFACE

4.1 Physical Termination

British Telecom will install a Jack 96A (Fig 4a) in customers premises to access Prestel. The customers Prestel Terminal will require a suitable compatible plug, eg a British Telecom Plug 505 (Fig 4b). The telephone connections to the Jack 96A are shown in (Fig 4c).

4.2 DC Conditions

Four sets of d.c. conditions are specified for the line interface:

a. The off-line condition (idle state) applies when the terminal is not using the telephone line.

b. The line holding condition applies when the terminal goes on-line, is sending tones to or receiving tones from the line and during inter-digit pauses.

c. The pulsing make condition applies during the make part of a dialled digit pulse.

d. The pulsing break condition applies during the break-part of a dialled digit pulse.

		Plug Points	Resistance	Capacitance
a.	Off-line	2-3	> 5 Mohm*	≤ 0.01 micro F
	Idle Condition	1-5	< 10 ohm	
b.	Line	2-3	≤ 300 ohm +	
	Holding Condition	1-5	> 5 Mohm	
c.	Pulsing Make	2-3	≤ 50 ohm	
		1-5	> 5 Mohm	
d.	Pulsing Break	2-3	> 5 Mohm	
		1-5	> 5 Mohm*	
	All times	Any to Earth	> 5 Mohm*	≤ 0.01 micro F

* Measured at 250 V d.c. All conditions to be independent of polarity.
+ Measured with line currents up to 120 mA (maximum d.c. short circuit current available from line).
When the terminal is transferring to the line holding state the high impedance between plug points 1 and 5 must not be presented more than 20 ms before the low impedance is presented between plug points 2 and 3.

4.3 AC Conditions

When the terminal is on-line (ie line holding condition) it shall present an impedance between 400 and 900 ohms at an angle not greater than 45 degrees for all frequencies between 300 Hz and 3400 Hz between plug points 2 and 3.

4.4 Autodialling

If a loop disconnect autodialler is fitted then the following requirements must be met:—

The digit signals shall appear as loop disconnect pulses between plug points 2 and 3 at a repetition rate of between 9 and 11 pulses per second.

The break period shall be between 63% and 70% of the total pulse period (break plus make).

The length of the break period [condition 4.2 (d)] of each pulse shall be within the limits of 57.2 to 77.8 ms and the length of the make period [condition 4.2 (c)] between any two break periods shall be within the limits 27.2 to 41.1 ms.

For a period of at least 5 ms before and after pulsing condition 4.2(c) shall apply.

The digit to be dialled represents the number of break pulses to be sent except that digit 0 represents 10 pulses.

Inter digit pauses shall be provided and the duration shall be between 800 and 900 ms.

During the pause, condition 4.2(b) shall apply except during the first and last 5 ms periods when condition 4.2(c) shall apply. Fig 4d explains this diagrammatically.

See Section 7.4.2 for Autodialler test and spark quench recommendation.

4.5 Connection Protocol

The setting up of a call to the Prestel computer is described stage by stage as follows:—

1 **The line must be seized, condition 4.2(b) applies.**

2 **The loudspeaker must be able to monitor the line to check that it is free, ie dial tone returned.**

3 **To limit the level of crosstalk interference, speech or signals on the line below −57 dBm must not be intelligible.**

4 **Supervisory signals must be made audible to the user regardless of terminal volume settings. The supervisory tones will be in the range of 0 to −30 dBm measured during a burst.** The standard tones used on the network are given in Appendix 1.

5 A local telephone line may be used simultaneously for Prestel and other modulated carrier systems above 10 kHz, eg alarms by carrier. **To prevent interference on the monitoring audio amplifier from these modulated carrier systems and from possible undetermined modulated signals it is required that signals from the telephone line above 10 kHz be attenuated by at least 20 dB relative to 1 kHz between the input terminals and the loudspeaker terminals.**

6 **Dialling if automatically initiated must commence within the minimum forced release time of Public Telephone Exchanges ie, 12 seconds from receipt of PSTN dial tone.**

7 The maximum time to receive dial tone after line seizure on the PSTN is one second, but for PABXs it may be longer.

8 A second dial tone may be encountered if the terminal is used on PABX extensions and the process of checking and waiting for dial tone will apply after the access digit has been dialled.

9 If dialling is automatically initiated it is recommended that after PABX access and PSTN line seizure a 4 second timer shall start the dialling ie, PABX dial tone — 4s delay — PSTN dial tone — 4s delay.

10 Recorded announcements and tones are to be made audible through the loudspeaker to indicate call failure to the user. Such announcements may contain all speech band components and so care should be taken with carrier detect circuits.

11 On receiving the 1300 Hz tone from a successful connection to the Prestel computer the terminal must be made ready to receive data signals and respond with a 390 Hz carrier after a minimum detection period of 600 ms. A 30 second time out will operate at the computer.

12 If at any time after the 1300 Hz tone has been received the level falls below −53 dBm for more than 600 ms the telephone connection shall be cleared [Para 4.2(a) refers].

13 Whenever the terminal is in line-holding or pulse-make condition, a clear visual indication shall be given to the user that the telephone line is in use.

14 The user must be able to clear the telephone connection at any time by reverting to TV or some other mode, (eg Viewdata-hold last page).

15 At the end of a call (indicated by the user or carrier fail) the terminal must revert to the offline condition as in Para 4.2(a).

16 If the terminal is not powered up then condition 4.2(a) shall be presented to line.

The exact user protocol is not defined but those keys which are used to initiate a Prestel call shall be clearly identified. The manufacturer shall make details available to British Telecom to assist with registration or service difficulties encountered by the customer.

4.6 Manual Dialling

A call may be established by the use of a normal telephone. On seizure of the computer modem 1300 Hz tone (binary 1) will be sent to the terminal. On hearing or detecting the 1300 Hz tone it must be possible to switch the terminal into the line holding condition as in Para 4.2(b) and the telephone handset replaced. The terminal must be made ready to receive data signals and then send a 390 Hz tone to the computer after a minimum carrier detection period of 600 ms. A 30 second time out will operate at the computer. At the end of a call (initiated by the user or carrier fail) the terminal must revert to the off-line condition as in Para 4.2(a).

4.7 Other Signalling Systems

Signalling System MF No. 4 is soon to be introduced on some Telephone lines and is used on some PABXs.

DC Code C signalling is also employed on some PABXs.

Full details of both these systems are given in POR 1151 obtainable from Prestel Headquarters. Address on last page of this specification.

FIG 4a JACK 96A

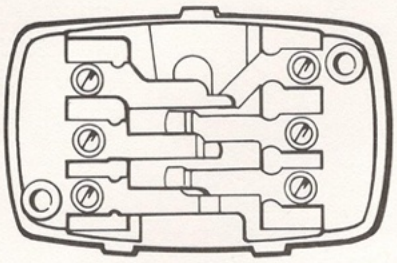

SPRING POSITIONS FOR JACK 96A

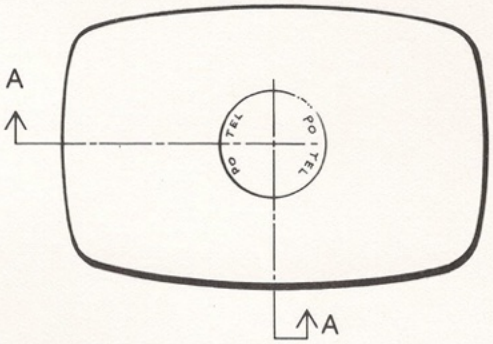

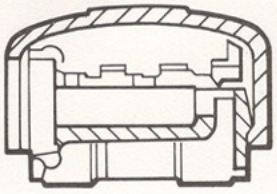

SECTION B-B
CONTACT SPRINGS OMITTED

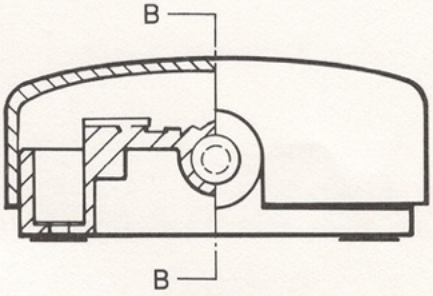

SECTION A-A
CONTACT SPRINGS OMITTED

FIG 4b PLUG 505

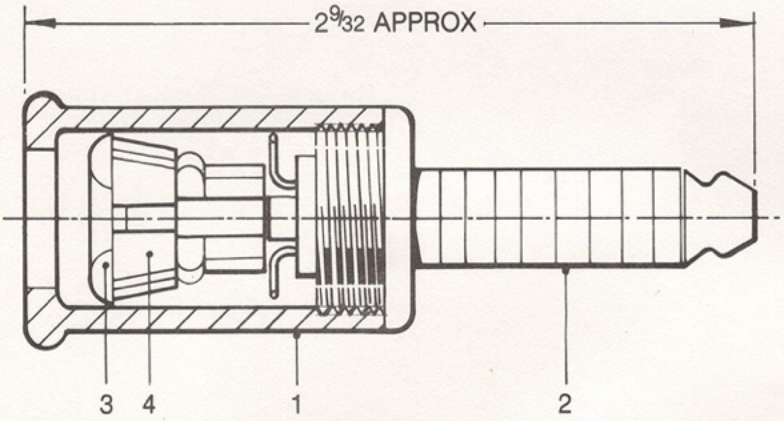

DIMENSIONS IN INCHES

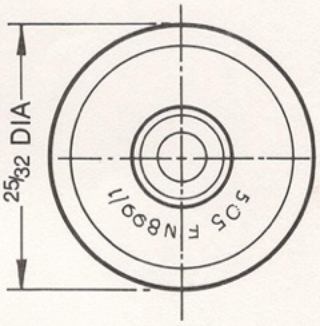

WITH ITEM 4 REMOVED THE INSULATION RESISTANCE MEASURED AT 500 V DC BETWEEN ANY TWO POINTS NOT ELECTRICALLY CONNECTED SHALL BE NOT LESS THAN 1000 MEGOHMS.

COLOURS:— BLACK, GREY AND IVORY

FOR USE WITH JACK NO. 96A (COLOUR) (DRG 91497)

SCHEDULE			
ITEM	PART	DRAWING	NO. OFF
1	ϕ 1/DCO/60 (COLOUR) (COVER, PLUG)	DCO/60	1
2	ϕ 1/DPL/400 (PLUG, ASSEMBLY)	DPL/400	1
3	ϕ 1/DRI/27 (RING, THRUST)	DRI/27	1
4	ϕ 1/DSP/3013 (SPACER, PLUG)	DSP/3013	1

ϕ REPLACEABLE ITEMS

FIG 4c JACK 96A CONTACTS

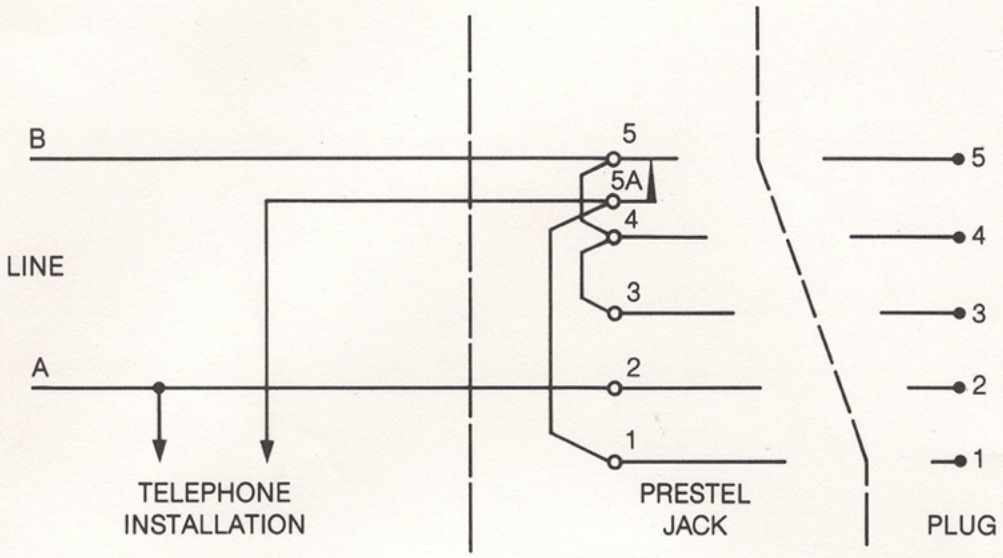

FIG 4d AUTODIALLER PULSES

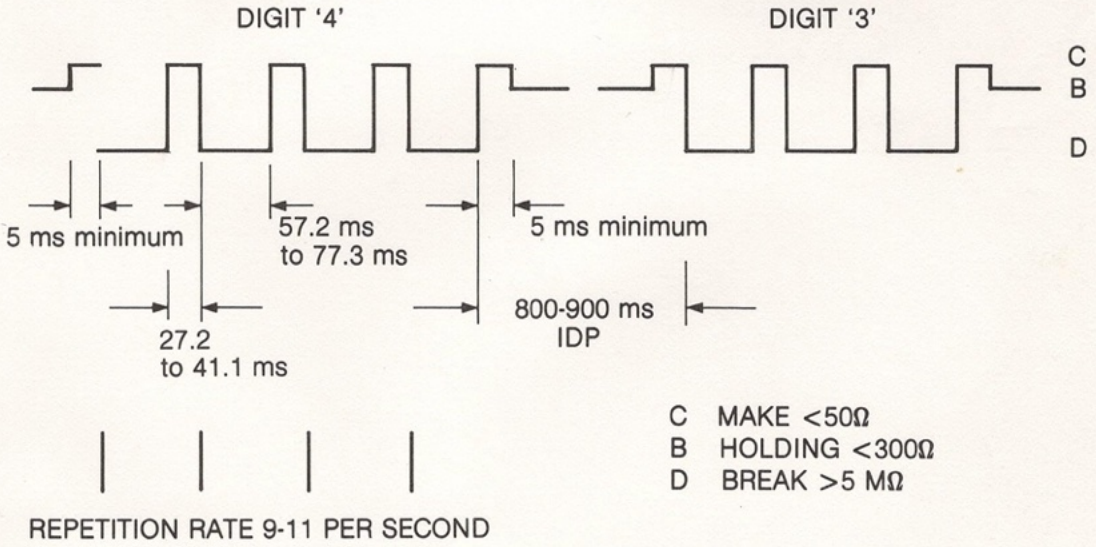

5 PERIPHERAL EQUIPMENT

The following interfaces are not a mandatory requirement for a Prestel Terminal but they are jointly recommended by British Telecom and the Industry Trade Associations.

5.1 Alphanumeric Keyboard and Interface

Alphanumeric Keyboards can be used with a Prestel Terminal to answer response frames. The optional backward channel codes that may be transmitted to the computer are shown in Columns 0, 1, 2, 3, 4, 5, 6 and 7 in Fig 5a. Further backward channel codes are required if a keyboard is to be used for editing text on the Prestel On-line Editing System (see Prestel Editing Keyboard Specification).

The following standard is recommended for the keyboard interface.

Keyboard plug: 6 pin DIN
Terminal socket: 6 pin DIN

Connections	Pin No.	Function	
	1	0 volts	
	2	+5 volts)	
	3	−12 volts)	see Note
	4	—	
	5	TTL data from keyboard (75 bit/s)	
	6	—	

Note: The power supply outputs from the terminal are not mandatory. If they are used, voltage tolerances and current levels are to be subject to local agreement between the terminal manufacturers and the nominated keyboard manufacturer(s).

5.2 Tape Recorder Interface

Tape recorder plug 5 pin DIN 180° with connections as per DIN standard for audio tape recorders is recommended.

For some purposes, a stereo recording having data on one channel and sound (commentary or music) on the other is useful. For this purpose it is recommended that the left channel is used for data and the right channel is used for sound. Switching arrangements may be provided for the playing of mixed audio/data stereo tapes via the terminal loudspeaker.

If the terminal is to control the tape recorder motor a 7 pin DIN to be used. Pins 1-5 as above; pin 6 −ve; pin 7 +ve Remote Control.

The data format on the tape is not defined. The filtered fsk line signal (1300 Hz/2100 Hz) is convenient for this purpose but other formats may have advantages, eg the Mullard/CUTS/1300 standard.

5.3 Tape Recorder Control Characters

The additional control characters 3b/5-3b/7 may be included in the character set to provide a tape recorder remote operation facility. The TAPE PAUSE (3b/5), TAPE START (3b/6) and TAPE STOP (3b/7) commands (see Fig 5a) enabling a user to record a string of pages automatically and to facilitate the subsequent retrieval of these pages from tapes is described as follows:—

1 The user selects a tape sequence from the database.

2 The computer sends TAPE START (3b/6) followed by a 2 second pause.

3 The computer sends the first page of data. This page is terminated with a TAPE PAUSE (3b/5).

4 The computer waits for a #from the user. The terminal may send this automatically after a suitable delay after the TAPE PAUSE (3b/5) or after data has stopped being received. The delay corresponds to the gap left between frames of data on the tape. (Typically 2 seconds.)

5 The computer sends subsequent pages as 3 and 4.

6 The computer sends the last page of the sequence terminated by TAPE PAUSE (3b/5), TAPE STOP (3b/7).

7 When replaying the tape, the TAPE PAUSE (3b/5) code may be used in the terminal to stop the tape and allow the user to read the page before proceeding to the next page.

8 TAPE START (3b/6) and TAPE STOP (3b/7) are used to control the tape motor during recording and are not necessarily stored on tape. They are not required to be decoded on replay.

Note: If the terminal is made capable of detecting the end of data, ie, binary 1 for 8 ms, both on record and playback then a manual system, independent of special frame sequence can be implemented.

5.4 Printer Interface

A recommendation for this section has not yet been determined. Refer Prestel HQ.

FIG 5a OPTIONAL TRANSMISSION CODES

NOTE: Columns 0, 1, 2, 3, 4, 5, 6 and 7 contain backward channel codes that may be used with alphanumeric keyboards.

Column 3b contains a set of control characters used from computer to terminal only for downloading pages automatically onto a tape recorder.

		b_7	0	0	0		0			1		1		1		1	
		b_6	0	0	1		1			0		0		1		1	
		b_5	0	1	0		1			0		1		0		1	
Bits	b_7 b_6 b_5 b_4 b_3 b_2 b_1	Row \ Col	0	1	2	2a	3	3a	3b	4	4b	5	5b	6	6a	7	7a
	0000	0			Sp		0			@		P		—		p	
	0001	1			!		1			A		Q		a		q	
	0010	2			"		2			B		R		b		r	
	0011	3			£		3			C		S		c		s	
	0100	4			$		4			D		T		d		t	
	0101	5			%		5		Tape pause on playback	E		U		e		u	
	0110	6			&		6		Tape start	F		V		f		v	
	0111	7			'		7		Tape stop	G		W		g		w	
	1000	8	Active Position Backward (APB)		(		8			H		X		h		x	
	1001	9	Active Position Forward (APF)		)		9			I		Y		i		y	
	1010	10	Active Position Down (APD)				:			J		Z		j		z	
	1011	11	Active Position Up (APU)		+		;			K		←		k		¼	
	1100	12	Clear Screen (CS)		,		<			L		½		l		‖	
	1101	13	Active Position Return (APR)		—		=			M		→		m		¾	
	1110	14		Active Position Home (APH)	.		>			N		↑		n		÷	
	1111	15			/		?			O				o			

6 SAFETY REQUIREMENTS

6.1 General

The manufacturer must safisfy British Telecom that the equipment meets the safety requirements given below. The requirements call for protection of the telephone line from both longitudinal and transverse voltages which could arise from faults in the equipment.

6.2 Certification of Protection Components

Any device used for protecting the Telephone line (eg the transformer, relays, fuse and gas discharge tube in Fig 6a must be clearly identified and specified and each type of device certified by its manufacturer as having been tested to and met the requirements given below. The certification must give all appropriate information and test figures and must accompany the initial request for permission to connect the terminal to line.

6.3 Transformer Construction

(Quoted from BS 3335: 1962.) "The barrier transformer shall be so designed and constructed that there is no possibility of any connection between input and output windings either directly or through other metal parts. In particular, precautions shall be taken to prevent

i. Displacement of input or output windings or the turns thereof, or of wires for external connections,

ii. Undue displacement of parts of windings or internal wiring in the event of rupture or loosening of connections. Random windings shall not be used.

Input and output windings on a single spool, side by side or concentric, shall not be used. The windings must be in accordance with one of the following methods:

a. On a single spool with a partition wall between windings, provided that the spool and partition wall are pressed or moulded in one piece.

b. On separate spools fixed so that the spools cannot move with respect to each other and to the core.

c. On cheekless formers on separate limbs of the core provided that each layer of the winding is interleaved with insulating material projecting beyond the ends of each layer, and that the windings are impregnated with a hard baking material which fully penetrates the interstices and effectively seals off the end turns.

Accessible metal parts shall be separated from live parts by double insulation except that reinforced insulation may be used on connector sockets, switches and the like where double insulation is not practicable."

6.4 Protection Against Longitudinal Voltages

The isolation between connections on either side of the barrier line (Fig 6a) and between any of those connections and any point on the exterior of the barrier components must be (1400 + 2 V) volts, minimum 2.8 kV, V being the highest voltage (occurring anywhere in the terminal) which is not certified as being segregated as in Para 6.7.

The isolation test consists of applying (1400 + 2 V) volts — minimum 2.8 kV — to the points concerned for 60 seconds and either:—

a. Immediately after removal of the test voltage, measuring the insulation resistance between the points at 500 volts d.c. minimum. The insulation must be not less than 100 Mohms, or

b. During the application of the test voltage measuring the current flowing. This must not exceed (0.01 × test voltage figure) micro-amps.

6.5 Bridging Across the Barrier Line

6.5.1 Wiring, pcb tracks and terminals carrying "dangerous" voltages (ie greater than 75 V a.c. rms or 106 V d.c.) or carrying voltages derived from a "dangerous" voltage supply via non-protected devices must be fully protected against accidental or other contact with connections on the British Telecom side of the barrier line. This may be achieved by enclosing the British Telecom side components and connections.

6.5.2 Barrier components must not be by-passed by any device which is not an acceptable isolating device.

6.5.3 On printed circuit wiring boards the clearance and creepage distances between conductors connected to opposite sides of the barrier line must meet the requirements of BS 5370 subject to a minimum track separation of (V/100) mm or 6 mm, whichever is the greater. The voltage V is defined in 6.4 above.

6.6 Protection Against Transverse Voltages

6.6.1 If the transformer saturates at a flux value insufficient to induce a voltage in excess of 75 V a.c. rms into the winding connected to the Telephone line then a gas discharge tube and fuse as shown in Fig 6a are not required.

6.6.2 If a step-down transformer is used such that no voltage in excess of 75 V a.c. rms may be induced into the winding connected to the telephone line when V as defined in 6.4 above is applied to the terminal side of the transformer then a gas discharge tube and fuse as shown in Fig 6a are not required.

6.6.3 If the transformer does not meet either 6.6.1 or 6.6.2 above then a gas discharge tube and fuse are required as shown in Fig 6a. Requirements for these devices are:—

6.6.3.1 Gas Discharge Tube (GDT)

This must have a maximum striking voltage of 115 volts including tolerances. It must be capable of carrying the fusing current of the fuse. Following rupture of the fuse the GDT must be capable of continuously carrying any leakage current that will flow when Voltage V (as defined in 6.4 above) is applied to the terminal side of the transformer. The GDT must be of a type which on failure, exhibits a short-circuit across its terminals.

6.6.3.2 Fuse

Standard 20 mm fast blow 250 mA fuse to BS 4265 standard, Sheet 2. The rating of the fuse must be clearly marked adjacent to its location. Slow blow or surge-resistant types of fuse are not acceptable.

6.7 High Voltages

All components, terminations and conductors carrying voltages greater than those for which the barrier provides protection shall be insulated and segregated from the barrier in such manner and to such extent as is reasonably necessary to minimise the risk of accidental establishment of a conducting path between the high voltage-points and the barrier components either by direct mechanical contact or by a fortuitous path established under fault conditions.

6.8 V24 and RGB Safety Requirements

V24 and RGB socket outlets allow unidentified peripherals that can generate voltages greater than that for which the barrier provides protection to be connected to the PSTN. Where the sockets are fitted extra protection must be provided in a similar form to that shown in Fig 6b. Alternative protective arrangements will be considered. Peripheral equipment produced to BS 415 standard is an acceptable alternative protective arrangement.

FIG 6a SAFETY REQUIREMENTS (Diagrammatic only)

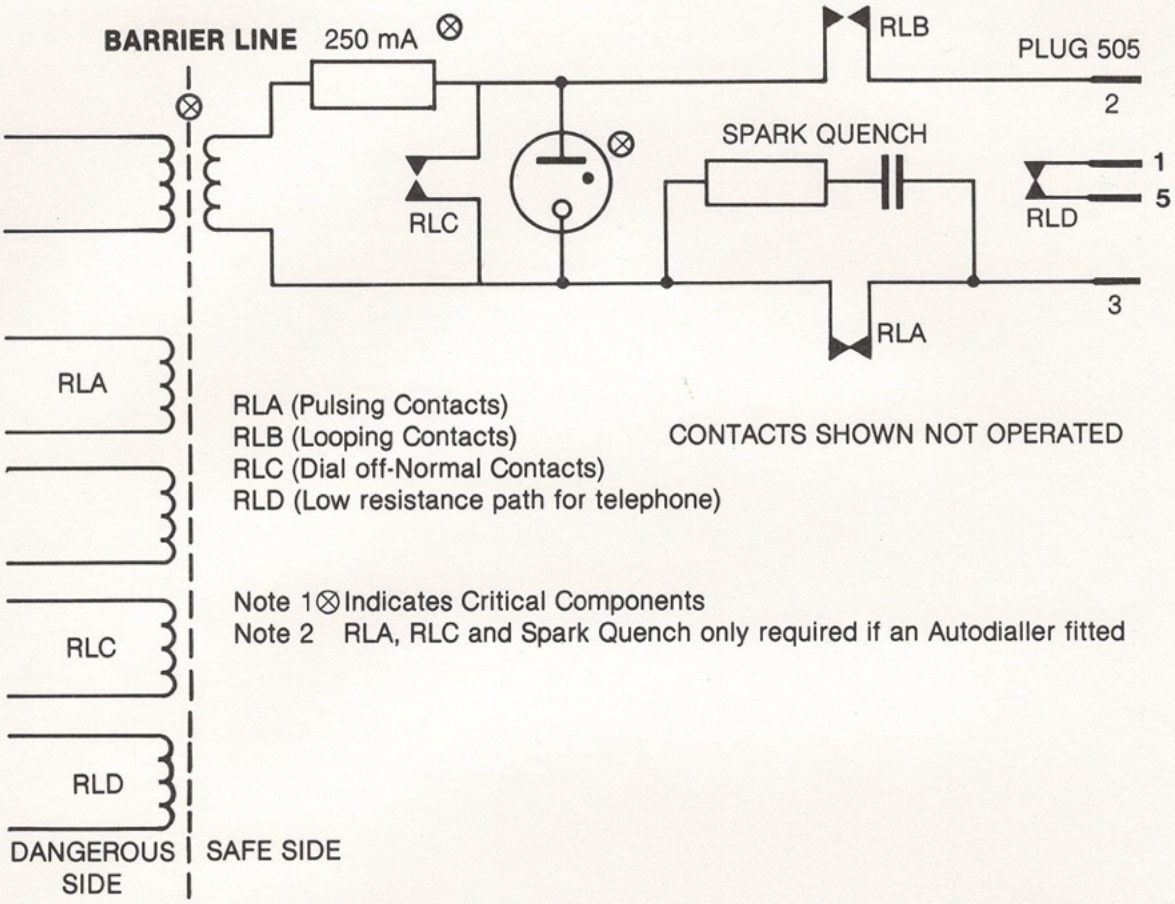

RLA (Pulsing Contacts)
RLB (Looping Contacts)
RLC (Dial off-Normal Contacts)
RLD (Low resistance path for telephone)

CONTACTS SHOWN NOT OPERATED

Note 1 ⊗ Indicates Critical Components
Note 2 RLA, RLC and Spark Quench only required if an Autodialler fitted

FIG 6b V24 & RGB SAFETY REQUIREMENTS

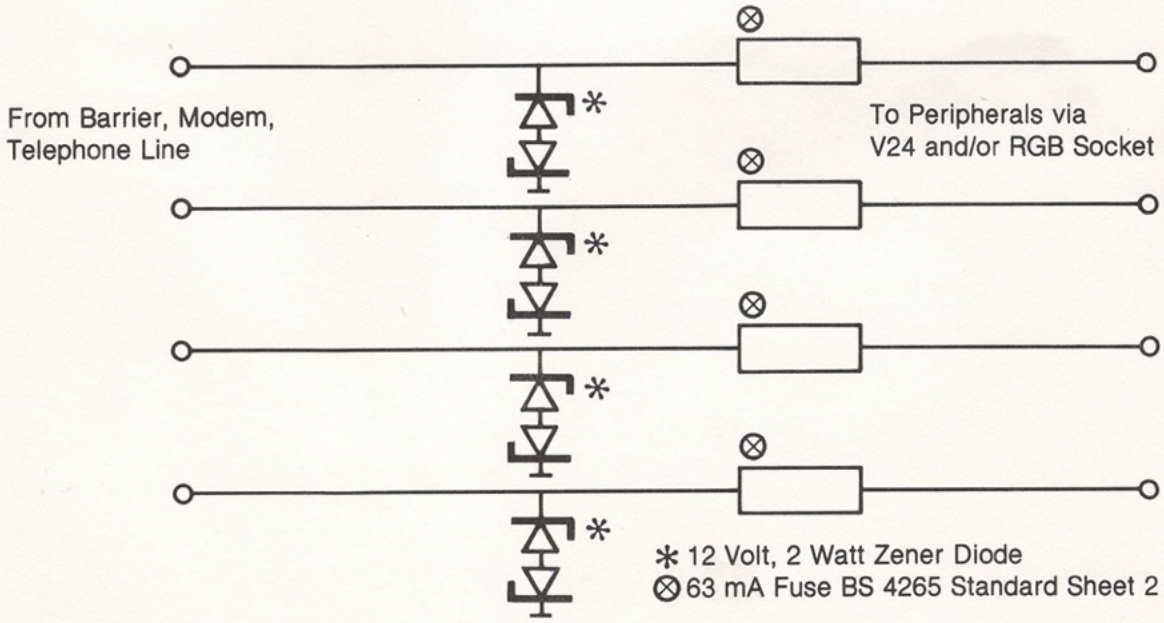

* 12 Volt, 2 Watt Zener Diode
⊗ 63 mA Fuse BS 4265 Standard Sheet 2

7 ATTACHMENT EVALUATION

7.1 Attachment of Private Equipment to British Telecom Maintained Plant
All private equipment intended for connection to British Telecom maintained plant must first be evaluated by British Telecom to ensure that it conforms to the requirements in Technical Guides Nos. 26 and 30 and this Specification. Where there are differences between the Technical Guides and this Specification, the latter shall prevail. Under the terms of the Post Office Telecommunication Scheme 1976 made under Section 28 of the Post Office Act 1969 each subscriber requires the written consent of British Telecom before any private attachment is connected to his installation.

In many cases the use of a private attachment connected to British Telecom maintained plant requires a British Telecom licence under Section 27 of the Post Office Act 1969. Where such a licence is necessary the written consent of British Telecom may bring the system within the coverage of the relevant British Telecom General Licence for Private Attachments to British Telecom Telecommunication Installations.

Applications by suppliers for the evaluation of their equipment should be made in the first instance to:

Prestel Headquarters
Prestel 4.1.2.1
Telephone House
Temple Avenue
London EC4Y 0HL

Charges will be raised for the evaluation of attachments and will vary with the amount of British Telecom resources required; they will normally range from £50 to £950 (plus VAT). In particularly complex cases, however, a specially assessed charge exceeding £950 may be made. Applicants will be notified of the charge following receipt of the application. Evaluation will not commence until a form of undertaking accepting the charge has been signed and returned to British Telecom. The full charge will be payable whether or not the device is found to be technically acceptable. A charge will be payable if an application is withdrawn at any stage subsequent to the acceptance of the charge. It should be noted that payment will not necessarily ensure British Telecom consent to the use of the equipment in question. Basic charges allow for a limited degree of retesting after new attachments have been modified during the evaluation stage. It will nevertheless be in the interest of the applicants to ensure that equipment is likely to meet British Telecom requirements before being submitted for evaluation; significant periods of prior consultation will however be taken into account when individual charges are assessed. When an attachment has been found technically acceptable British Telecom proceeds in one of two ways. If the attachment is to be generally available British Telecom will either take a formal agreement with the manufacturer or require the acceptance of certain terms and conditions in which case customers requests for connection of the equipment can be dealt with by the local British Telecom staff. The formal agreement document is shown in Appendix 2.

If the private equipment is unique or falls within certain limited categories each application to connect it to British Telecom plant will be dealt with by Prestel Headquarters. British Telecom only enters into such agreements with companies who have a registered place of business in the United Kingdom.

Once evaluated, private attachments must not be modified from the equipment submitted for evaluation without British Telecom agreeing in writing to such modification.

British Telecom accepts no responsibility for the satisfactory performance of the attachment. Attachments are not normally evaluated for performance, reliability or quality of service parameters and hence permissible equipment should not be described as 'British Telecom Approved'.

British Telecom reserves the right to revise its requirements at any time and gives notice regarding such changes. No new private attachment will be permitted connection to British Telecom maintained plant after the expiry date of such notice unless it complies with the new requirements. The supplier shall carry out modification to new attachments arising from such changes at his own expense.

7.2 Attachments to Terminals

Peripheral equipment containing voltages higher than mains supply voltage (normally 240 V a.c. rms, 360 V peak or d.c.) must meet the conditions above. Applications for the evaluation of such equipment should be submitted by the supplier as for other types of private equipment (see 7.1). British Telecom reserves the right to control the supply and use of peripheral equipment containing voltages up to and including mains supply voltages of 240 V a.c. rms, 360 V peak or d.c. if a significant degree of interference etc is identified in the light of experience.

7.3 Engineering Changes

The manufacturer will be required to appoint an engineer who will be responsible for identifying any relevant changes in the design or manufacture of the terminal and notifying Prestel 4.1.2 of them in writing. "Relevant" shall mean those changes which affect British Telecom areas of concern as outlined in this specification. In cases of doubt about the relevance of a change an informal enquiry should be made to Prestel 4.1.2.1.

7.4 Technical Approval

7.4.1 Check List

The following check list (Table 7a) is used by British Telecoms Attachment Evaluation Group when checking Prestel Terminals.

The list contains references to the relevant section within the Terminal Specification. Before these checks are made the equipment submitted for approval must comply with the mandatory display characteristics and character set indicated in Section 2, and the telephone and identity number policies in Section 8 of this specification.

TABLE 7a ATTACHMENT APPROVAL CHECK LIST

1	**PROTECTION**	**RELEVANT SECTION**
	a. Transformer Transverse/Longitudinal Voltages	6.2, 6.3, 6.4, 6.6
	b. Gas Discharge Tubes	6.6.3.1
	c. Fuses	6.6.3.2
	d. Bridging across the barrier	6.5
	e. Relays	6.4
	f. HV Protection	6.7
	g. V24 and RGB interface	6.8
2	**SIGNALLING**	
	a. Line state resistance	4.2
	b. Dialling Auto/Manual	4.4, 4.6
	c. Telephne Numbers	8.1
	d. Impedance	4.3
	e. Connection Protocol	4.5
3	**TRANSMISSION**	
	a. Spectrum (Transverse)	Fig 3a and 3b
	b. Spectrum (Longitudinal)	3.1
	c. Transmitted Level	3.1
	d. Received Level	3.1
4	**AUDIO O/P**	
	a. Supervisory Tones	4.5.4
	b. Crosstalk	4.5.3
5	a. Power off	4.5.16
	b. Clear key	4.5.15
	c. Carrier fail	4.5.12 and 3.1
	d. Revert to TV	4.5.14

7.4.2 Autodialler Test

A spark quench circuit across the pulsing contacts is recommended. This consists typically of a capacitance of 2 microF in series with a resistance of 30-100 ohms.

The test conditions used when determining the repetition rate and ratio of autodialling signals are as follows:—

1 The terminal is connected via Plug Points 2 and 3 to a non-reactive d.c. supply having a potential of 10 to 50 volts and a resistance such that the current which flows during the make period is less than 100 mA.

2 Each pulse of the pulse train must be within the repotition rate and ratio stated above. The break period is taken as the time between the instant when the steady state current commences to fall and the instant when the current commences its final rise.

8 BRITISH TELECOM POLICY

8.1 Telephone Numbers

The autodialler may dial up to 4 separate Viewdata services served by a maximum of six telephone numbers — A:B:C:D:E and F. For access to Prestel, two telephone numbers (A and B) shall be provided, and required to be stored, enabling access to two identical Prestel databases to give the user security of service in case of disaster or network congestion. If the maximum facility is adopted then the first choice shall access the Prestel pair of numbers. The second choice accessing another pair of numbers C and D with the third and fourth choice accessing E and F respectively. NOTE: each of the four choices may access a single number in which case they will access A, B, E and F. If the two Prestel access numbers are controlled by one user service option, as opposed to a separate selection for each number, the first number (A) will be used on the first call after power-up. The second number (B) will be used on the next attempt at contacting Prestel. Subsequently, A and B will be used alternately for successive calls until the terminal is switched off. Alternatively, a truly random initial calling of A or B will be used. British Telecom will require to know which method is employed. Manufacturers wishing to submit terminals with a different arrangement of telephone numbers within the confines of the conditions of the above paragraph should contact Prestel 4.1.2.1.

8.2 Identity Number

When the terminal is connected to the Prestel system and receives ENQ(0/5) it shall begin to transmit the Prestel identity number to the computer within 50 ms. This identity number will take the form of a string of up to 16 digits and shall be sent in the same format as normal data at 75 bits. After transmission of this ENQ(0/5) the computer will await transmission of the identity number from the terminal. If a non-valid identity number is received by Prestel the computer will resend ENQ(0/5). On receipt of ENQ(0/5), whilst connected to the Prestel system, the terminal shall be inhibited from transmitting any information except the Prestel identity number. This period of inhibition shall only cease when the identity code has been transmitted in its entirety. The terminal shall not display the Prestel terminal identity number.

8.3 Programming

8.3.1 Programming of ID Numbers

British Telecom requires that the Prestel identity number be remotely programmable, as described in Paragraph 8.3.3. On giving reasonable notice to the user, British Telecom may require a change in the Prestel identity number.

8.3.2 Programming of Telephone Numbers

Programming of the Prestel access telephone numbers (see Note 1) shall be performed either locally (see Note 2) or both locally and remotely.

Note 1 — British Telecom retains the right to change the telephone numbers provided for Prestel access on giving reasonable notice to users.

Access telephone numbers may change for a number of reasons, for example:—

— Modernisation of the telephone network involving a new telephone numbering scheme,

— Modernisation of the telephone exchanges serving either customer or Prestel computer (or both),

— Implementation of revised telephone traffic routings to accommodate traffic efficiently as it grows,

— The opening of a Prestel computer nearer to a customer than the computer which already serves him

— Movement of the customer to another telephone exchange area.

Customers may be affected by any one of the above reasons or by any combination of them. Some customers, particularly in large cities, may very seldom be affected at all. It is not, therefore, possible to assess the likelihood or frequency of changes.

Note 2 — In order to avoid committing British Telecom or TV dealer resources when access code changes occur, it is necessary that "local programming" be interpreted as programming by the customer using his keypad. The procedure shall be readily understandable to the customer but not so readily effected that the keypad can be used as a press-button dialler.

8.3.3 Remote Programming Protocol
Programming data will be sent down the telephone line from the local Prestel Centre.

When a new terminal is installed the user or dealer will call the Centre and give name, address, telephone number and any necessary information about the set eg manufacturer, type number etc.

The Centres will call the user back (to verify the telephone number) ask the user to put the terminal on-line and start the programming routine. After the programmed numbers have been checked by the centre the terminal will be ready for use.

The programming routine is entered by a 4 character sequence ESC-1, ESC-2. This puts the terminal into Programme-Verify mode (see Fig 8a). The memory is divided into seven 16 character blocks. A skip block command ESC-3 is used to skip through the blocks. Default is Block 1 at entry to Programme-Verify mode. After a number (0-6) of skip block commands, Verify mode may be selected by ENQ, or Programme mode may be selected by ESC-4.

Entry of Verify mode shall cause the terminal to transmit down the telephone line the contents of the current block (excluding any space-filling characters) at 75 bit/s and then revert to normal mode.

Programme data shall follow ESC-4 using the Numbers 0-9 for the Identity Code and the codes given below for telephone numbers. Character 3/15 (?) will be used as a space-filling character after valid data characters to make the total number of characters in a block equal to 16. 3/15 (?) may also be used between parts of the number to identify "natural" breaks. It may then be displayed as a space if the number is displayed for the user, eg — :1?618?1111???? displayed as 01 618 1111. Please note that the terminal I.D. must not be displayed on the screen.

After receiving these 16 characters the terminal reverts to normal mode.

Any parity error or any character not defined in the above sequences (except NUL which may occur at any time in asynchronous transmissions) shall cause the terminal to revert to normal mode. The memory should not be programmed until a complete block has been successfully received. During Programme mode, writing into the display memory shall be inhibited.

The code 3/14 (>) shall be reserved for private internal use in the context of autodialler codes, eg it may be used to flag an empty memory block. It will not be transmitted down the line.

Dialler Codes (Only for blocks 2-7)

DIALLED DIGIT	RECEIVED ISO 7 CHARACTER	(also used for transmission after ENQ for block verification)
1	1	
2	2	
3	3	
4	4	
5	5	
6	6	
7	7	
8	8	
9	9	
0	:	
PAUSE	;	
RESERVED	>	
SPACE FILLER	?	

A delay of at least 5 s will be present between the last character to be written into the memory and the next attempt to leave Normal mode. This is to facilitate the use of slow write/erase memories.

Blocks 1-7 are defined as follows:—

Block 1	Identity Number
Block 2	Telephone Number A
Block 3	Telephone Number B
Block 4	Telephone Number C
Block 5	Telephone Number D
Block 6	Telephone Number E
Block 7	Telephone Number F

A and B are the Prestel Computer Centre telephone numbers with power-up priority (if any) assigned to A.

C and D are the second pair of alternate numbers (priority to C).

E and F are the third and fourth choices.

8.4 Non-Volatile Memory

The non-volatile memory used for storing the identity and telephone numbers shall have a no-usage data retention time of at least 60 days. It shall have a minimum number of accesses of 365,000.

FIG 8a FLOW DIAGRAM FOR PROGRAMMING ID AND TELEPHONE NUMBERS

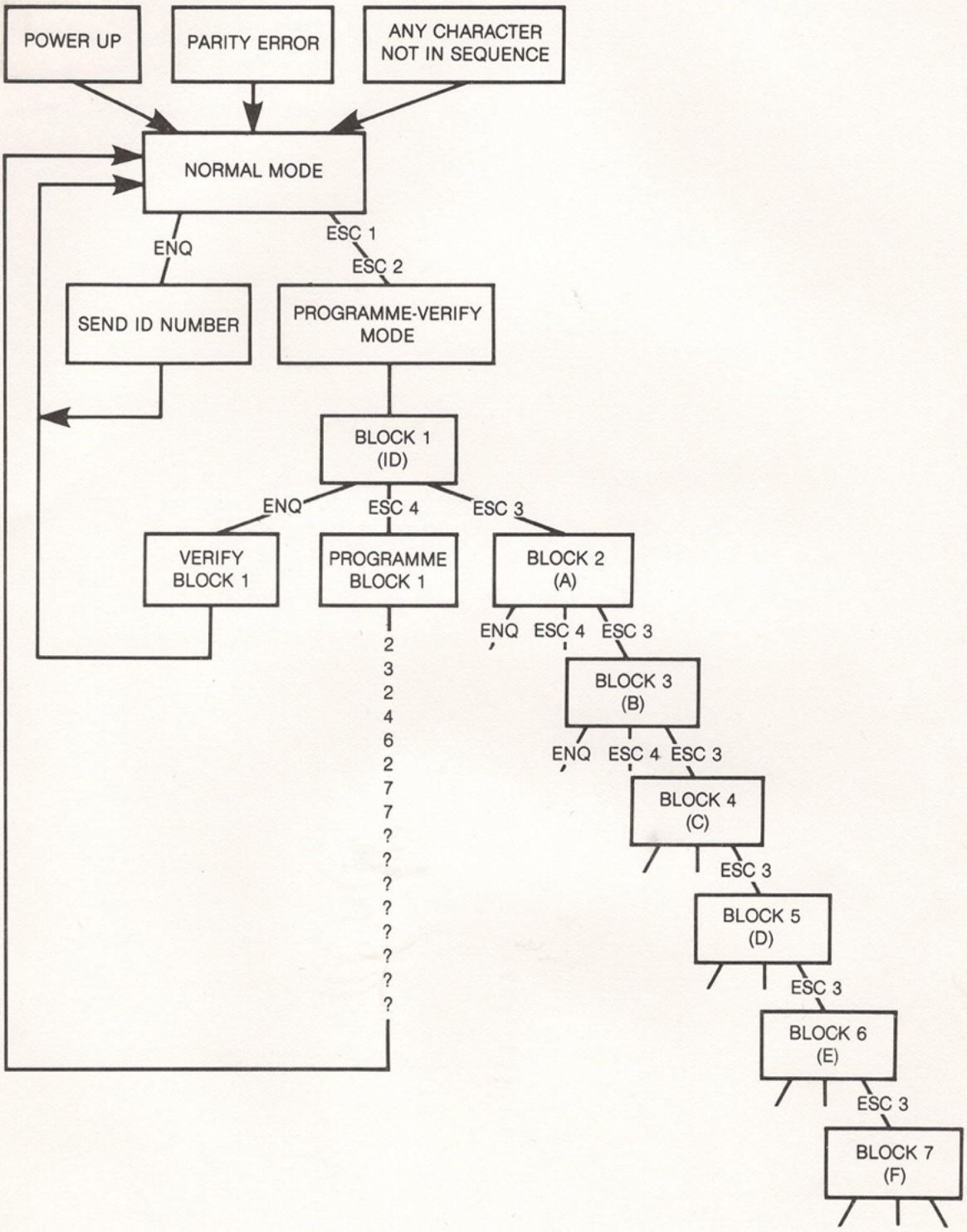

9 BRITISH TELECOM RECOMMENDATIONS

9.1 Recommended Keypad

The recommended layout of a keypad is shown in Fig 9a. It is the telecommunications industry standard and such a layout may be assumed in games and other services which require directional control.

Fig 9a

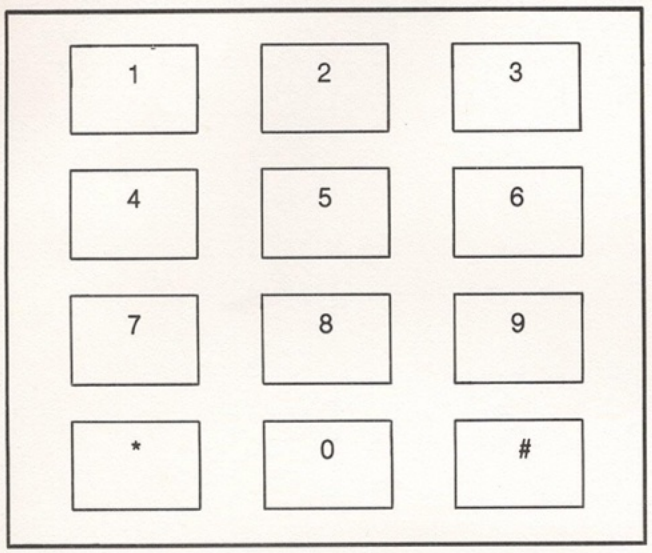

9.2 Recommended Shape of Star and Square

A recommended shape to represent star and square on the keypad is shown in Fig 9b. It is not a requirement that the terminal displays these characters exactly as indicated.

Fig 9b SQUARE STAR

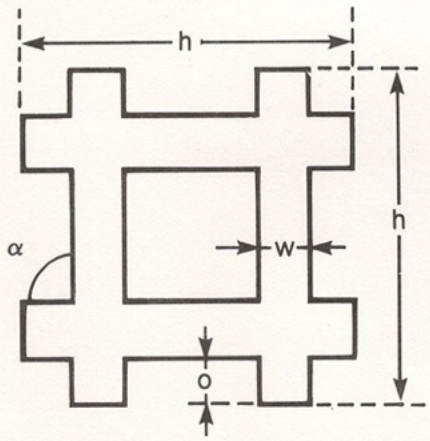

$\frac{o}{h} = 0.125 \quad \frac{h}{w} = 6 \quad \alpha = 90°$

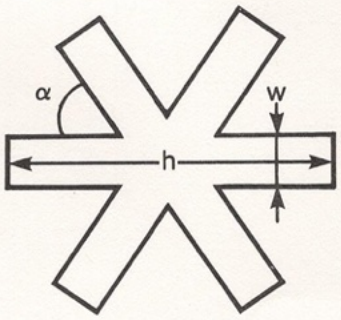

$\frac{h}{w} = 6 \quad \alpha = 60°$

9.3 Recommended Parity Error Display

In the interest of preserving uniformity of display to the user it is recommended that the character displayed to represent parity errors shall be DEL(7/15).

APPENDIX 1

STANDARD TONES ON THE PUBLIC SWITCHED TELEPHONE NETWORK

1	**Number Unobtainable Tone**		400 Hz continuous	
2	**Engaged Tone**		400 Hz interrupted	0.75 s on 0.75 s off
		or	400 Hz interrupted	0.375 s on 0.375 s off
3	**Pay Tone**		400 Hz interrupted	0.125 s on 0.125 s off
4	**Ringing Tone**		400 Hz or 400 + 450 Hz modulated by 50, 25 or 17 Hz and interrupted	0.4 s on 0.2s off 0.4 s on 2.0s off
5	**Equipment Engaged Tone**		400 Hz interrupted	0.4 s on 0.35 s off 0.225 s on 0.525 s off

*The 0.4 s tone period is 6 dB below the level of the 0.225 s period.

6 Dial Tone

This will be 50 or 33 1/3 Hz with high order harmonics. The frequencies quoted may vary over the range +5% to −13% and the tones may contain high-order harmonics due to the variation of waveform from sinusoidal to almost square-wave.

Note: Periodicities may vary +5% except Pay Tone which may vary in periodicity by +33% to −20%.

7 New Dial Tone

It is planned to introduce SSMF 4 signalling and MF Keyphones into the UK public switched telephone system in the foreseeable future. It is necessary, as a prerequisite, to change the existing UK dial tone.

The characteristics of the new dial tone are:—

Frequency: Two simultaneous tones of 350 Hz and 440 Hz, within a tolerance of ± 0.5%.

Harmonics: Each harmonic will not exceed 40 dB below the level of the fundamental.

Levels:
a. Minimum level at customer's telephone terminals will be minus 24 dBm (each tone, minus 27 dBm).

b. Maximum level at customers telephone terminals will be minus 10 dBm (each tone, minus 13 dBm).

It is possible that dial tone may ultimately be a single frequency of 440 Hz or 450 Hz and this should be born in mind when designing any new dial tone detectors. No date can be given because the outcome is dependent upon international agreement.

It should also be noted that where new dial tone is provided and SSMF 4 signalling is subsequently introduced the public exchange concerned will have a dual signalling capability (ie loop disconnect and MF 4) for at least 20 years.

It follows that the loop disconnect dialling facility will not be affected by the new dial tone.

THIS AGREEMENT is made the
day of one thousand nine hundred and eighty
BETWEEN the POST OFFICE of the one part and

whose registered office is at

(hereinafter called "The Company") of the other part.
WHEREAS:
1 THE Company is concerned in the manufacture of certain private equipment described in the Schedule hereto (hereinafter referred to as "the Equipment") which is to be connected with additional Post Office apparatus to Post Office telephone exchange lines hereinafter referred to as "Post Office Installations".

2 THE Post Office has evaluated a model of the Equipment which is acceptable as a Private Attachment as defined in the relevant Scheme made under Section 28 of the Post Office Act 1969 for connection to a Post Office Installation.

3 SUCH (if any) item or items of peripheral equipment as is or are described in the Schedule hereto has or have been evaluated and found acceptable by the Post Office for connection to the equipment and where the context so permits or requires references hereinafter made to "the Equipment" shall include references to any such item or items of acceptable peripheral equipment.

NOW IT IS HEREBY AGREED AND DECLARED as follows:-

1 WHENEVER the Company is concerned with supplying the Equipment

(i) the Equipment when manufactured shall conform to the requirements published by the Post Office Telecommunications Headquarters in Technical Guides Nos. 26 and 30 and in the Prestel Terminal Specification against which the model as described by its unique title in the Schedule hereto was evaluated and found acceptable by the Post Office.

Where there are differences between the requirements of Technical Guides Nos. 26 and 30 and those of the Prestel Terminal Specification, the latter shall prevail

(ii) the Company shall on not less than one year's notice from the Post Office make such modifications to the design and construction of the Equipment it manufactures after the expiration of the notice as may from time to time be necessitated by changes in the design techniques or facilities of the Post Office telecommunication system except that in the case of modifications necessitated by reasons of safety or national security or modifications required to prevent any unauthorised use of Post Office Installations or as may otherwise be reasonably required by the Post Office the Company shall make such modifications as aforesaid to the Equipment it manufactures after the date of

notification or on the expiration of such period of notice as the Post Office may in any case at its absolute discretion determine. If the Company declines to make such modifications as provided in this sub-clause the Post Office may give notice to the Company and the Equipment shall be deemed to have been deleted from the Schedule hereto but without prejudice to any liability of either party which may have arisen in relation thereto

(iii) (a) Subject to the provisions hereunder the Company shall indemnify the Post Office against all actions costs proceedings claims and demands whatsoever and by whomsoever made or brought in respect of any loss damage or injury done or suffered to the extent that any such loss damage or injury is directly attributable to the design of the Equipment or workmanship in the manufacture by the Company of or materials used by the Company in the manufacture of the Equipment, but not to the extent that any such loss damage or injury is caused by external voltages other than those used to power the Equipment

(b) the Post Office shall promptly give notice to the Company of any such action proceeding claim or demand and shall not admit any liability in respect thereof without the written consent of the Company or its insurers nor make any payment in respect thereof except under an order of the Court

(c) unless in cases of personal injury within four months and in other cases within three months of notice having been given under the preceding paragraph the Company gives notice to the Post Office that it or its insurers intend to deal with or settle such action proceeding claim or demand the Post Office shall be at liberty to defend, deal with or settle the action, proceeding, claim or demand without reference to the Company or its insurers and as it in its absolute discretion sees fit

(d) if in connection with any action, proceeding, claim or demand with which the Company or its insurers are dealing, any matter or issue shall arise which involves or may involve any privilege or special right of the Crown or of the Post Office conferred by statute or delegated legislation (including any privilege or right in relation to the discovery or production of documents) and the Post Office advises the Company in writing to this effect quoting the relevant authority on which the privilege or right is based the Company or its insurers shall before taking any action thereon, consult the Solicitor to the Post Office and act in relation thereto as may be required by the Post Office and if either the Company or its insurers fail to comply with this paragraph then without prejudice to the Company's liability to indemnify the Post Office in accordance with paragraph (a) hereof the Post Office may deal with or settle the action proceeding claim or demand

(e) the Post Office shall, subject to the last preceding paragraph at the request of the Company or its insurers afford all reasonable assistance for the purpose of assessing contesting or settling any such action proceeding claim or demand and shall be repaid any reasonable expenses incurred in so doing

(iv) the Company shall pay to the Post Office the amount of any reasonable expenses incurred by the Post Office in repairing or replacing any Post Office property damaged to the extent that such damage is directly attributable to the design of the Equipment or workmanship in the manufacture by the Company of or materials used by the Company in the manufacture of the Equipment, but not to the extent that any such damage is caused by external voltages other than those used to power the Equipment

(v) the Company shall make no claim against the Post Office or any person engaged in the business of the Post Office in respect of any damage or injury done to or suffered by any person using the Equipment or done to the Equipment if the cause of such damage or injury originated from the Equipment or from electric current conveyed by or by means of the Equipment. The Company shall recognise that the Equipment is liable to damage from voltages present or impressed on Post Office lines as stated in the relevant Technical Guide No. 26 on protection design requirements for private attachments connected to Post Office maintained equipment or circuits which is issued from time to time by the Post Office. This sub-clause shall not apply if the cause of such damage or injury is attributable to the negligence or wilful act of any person engaged in the business of the Post Office

2 (i) THE Company's liability under Clause 1(iv) hereof shall not exceed the sum of one million pounds in respect of any one incident or any series of incidents of damage arising on one occasion from a common cause. The said sum represents the limit of liability up to 31 October 1979, but on 1 November 1979 and on each successive anniversary the limit shall be multiplied by the factor given in Clause 2(ii) hereof and this Agreement shall take effect subject to such adjustment except as to any liability which may have arisen prior to the date of any adjustment

(ii) the factor to which Clause 2(i) hereof refers is Gross Domestic Product (GDP) as calculated by the Central Statistical Office and published in 'Economic Trends' a national income and expenditure publication, for the calendar year preceding the date of adjustment at current factor cost based on expenditure data for that same year divided by the GDP for that same year at constant factor cost based on expenditure data for calendar year 1975, the resultant quotient further divided by 1.27 (one decimal point, two seven).

3 IF any dispute or difference shall arise between the parties hereto except a dispute or difference in any way arising out of the indemnities given by the Company under Clause 1(iii) hereof such dispute or difference shall be submitted to a single arbitrator to be agreed upon between the parties or in default of agreement to an arbitrator nominated by the President of the Institution of Electrical Engineers in accordance with and subject to the provisions of the Arbitration Act 1950 or any statutory modification or re-enactment thereof for the time being in force.

4 (i) IN any proceedings in connection with Clause 1(iii) and in any proceedings or arbitration in connection with Clause 1(iv) or (v) hereof a certificate given on behalf of the Post Office shall be evidence that the loss damage or injury was attributable to the cause referred to in that clause

(ii) in any proceedings in connection with Clause 1(iii) hereof evidence provided by the Post Office under Clause 4(i) hereof shall also be given to the Company at its request

(iii) in any proceedings or arbitration in connection with Clause 1(iv) hereof a certificate given on behalf of the Post Office shall be evidence of the amount of any such expenses as are mentioned in that Clause and that those expenses were incurred in any of the ways referred to in that Clause

(iv) any certificate given on behalf of the Post Office for the purposes of this Clause shall be signed by a person who is then employed by the Post Office in its telecommunication business at a rank of not less than Head of Division or any rank equivalent thereto and who is at that time authorised by the Post Office to act on its behalf in signing any such certificate.

5 (i) THE Company shall not in any way imply that the Equipment or its operation is recommended or warranted or guaranteed by the Post Office or state that the Post Office will consent to the connection of the Equipment with a Post Office installation

(ii) The Company may however indicate in all advertisements or other publicity matter when specific items of the Equipment described in the Schedule hereto are mentioned that the Equipment is supplied under Agreement with the Post Office and has been evaluated by the Post Office and found to meet its requirements for connection to Post Office Installations (which type of installation shall be specified)

(iii) The Company may also indicate in its advertisements and other literature that any items of peripheral equipment as described in the Schedule hereto may be attached to the Equipment without the need to obtain the consent of the Post Office.

6 (i) THE Company may after the expiry of one year from the date of this Agreement give one year's notice to the Post Office that it wishes to discontinue the supply to the public under the terms of the Agreement of any Equipment described in the Schedule hereto specifying its title providing that in the case of any such Equipment which may be deemed to be included in the Schedule in pursuance of any supplemental agreement between the parties hereto the Company shall give notice of such intention to discontinue after the expiry of one year from the date of such supplemental agreement

(ii) subject to the provisions of paragraph (iii) of this Clause after a period of five years has elapsed from the expiration of the period of notice given in respect of the discontinuation of supply of Equipment in accordance with paragraph (i) of this Clause the terms and conditions of this Agreement shall cease to apply to such Equipment without prejudice to any rights and obligations which may have accrued in respect thereof to or against the Company before the termination of the said period of five years

(iii) if any Equipment in respect of which notice of the discontinuation of supply has been given in accordance with paragraph (i) of this Clause has been supplied for a period exceeding six years from the date entered on the Schedule or deemed to be included in the Schedule in pursuance of any supplemental agreement between the parties hereto until the date of expiration of the period of notice as aforesaid the period of five years specified in paragraph (ii) of this Clause shall be reduced by one year for every year of supply of that Equipment which exceeds six years up to a maximum reduction of three years.

7 (i) NOTHING herein contained shall be construed as an undertaking that the Post Office will in any case grant a consent to a subscriber to connect any Equipment to Post Office Installations and if it grants a consent it shall not be irrevocable

(ii) The Post Office may at any time by giving reasonable notice to the Company and for such reason or reasons as shall be specified in the said notice withdraw permission for the further connection of any Equipment with Post Office Installations which shall take effect at the absolute discretion of the Post Office either forthwith or on a specified date without prejudice to any rights and obligations which may have accrued in respect of such Equipment to or against the Company before the said withdrawal of permission.

8 IF the Post Office evaluates a new type of equipment submitted to it by the Company and if the Post Office agrees that the provisions of this Agreement shall apply to that new type the parties hereto shall enter into a supplemental agreement so that the new type of equipment shall be deemed to be included in the appropriate Schedule to this

Agreement. The Post Office shall deal promptly with any request for such evaluation submitted by the Company and shall be responsible for ensuring that the List of Permissible Attachments and all information in connection therewith are kept up to date throughout the period of this Agreement.

9 THE Company shall forthwith give notice in writing to the Post Office of any change of its name or of its registered office and any such notice shall refer to this Agreement.

10 (i) ANY notices required to be served on the Post Office by the Company under this Agreement shall be sent in writing which may include telex to the Post Office at Telecommunications Headquarters, Marketing Executive, Residential Customer Services Department, London

(ii) any notices required to be served on the Company by the Post Office under this Agreement shall be sent in writing which may include telex to the Company's registered office.

11 THIS Agreement shall be governed by the Law of England.
IN WITNESS whereof the parties have caused their Common Seals to be hereunto affixed the day and year first above written.

THE SCHEDULE herein before referred to

UNIQUE TITLE OF EQUIPMENT	DATE FOUND PERMISSIBLE BY THE PO	TYPE OF PO INSTALLATION WITH WHICH EQUIPMENT IS COMPATIBLE	ANY SPECIAL CONNECTION ARRANGEMENTS TO BE CONVEYED TO CUSTOMERS

THE SCHEDULE (Continued)

UNIQUE TITLE OF EQUIPMENT	DATE FOUND PERMISSIBLE BY THE PO	TYPE OF PO INSTALLATION WITH WHICH EQUIPMENT IS COMPATIBLE	ANY SPECIAL CONNECTION ARRANGEMENTS TO BE CONVEYED TO CUSTOMERS

THE SCHEDULE (Continued)

UNIQUE TITLE OF EQUIPMENT	DATE FOUND PERMISSIBLE BY THE PO	TYPE OF PO INSTALLATION WITH WHICH EQUIPMENT IS COMPATIBLE	ANY SPECIAL CONNECTION ARRANGEMENTS TO BE CONVEYED TO CUSTOMERS

THE COMMON SEAL of
the POST OFFICE affixed
hereto is authenticated
by the signature of

a person authorised by that
POST OFFICE to act for that
purpose

THE COMMON SEAL of

was hereunto affixed
in the presence of:-

DATED 198 .

THE POST OFFICE

and

AGREEMENT

In respect of private equipment manufactured for connection to the Post Office Telephone System for the purposes of the PRESTEL PUBLIC SERVICE

ALL ENQUIRIES CONCERNING THIS SPECIFICATION, PRESTEL EQUIPMENT, ETC, ARE TO BE ADDRESSED TO:

PRESTEL 4.1.2
PRESTEL HEADQUARTERS
TELEPHONE HOUSE
TEMPLE AVENUE
LONDON EC4Y 0HL