Introduction to Internet of Things

Perception Layer - Part 4

Content

1. PWM.
2. Time measurement.
3. HC-SR04
4. DHT11
5. I2C
6. SPI
7. Connectivity

PWM

Pulse Width Modulation

Changes a voltage/current signal with

pulse time duration

An output pin of the ESP32 can do this job

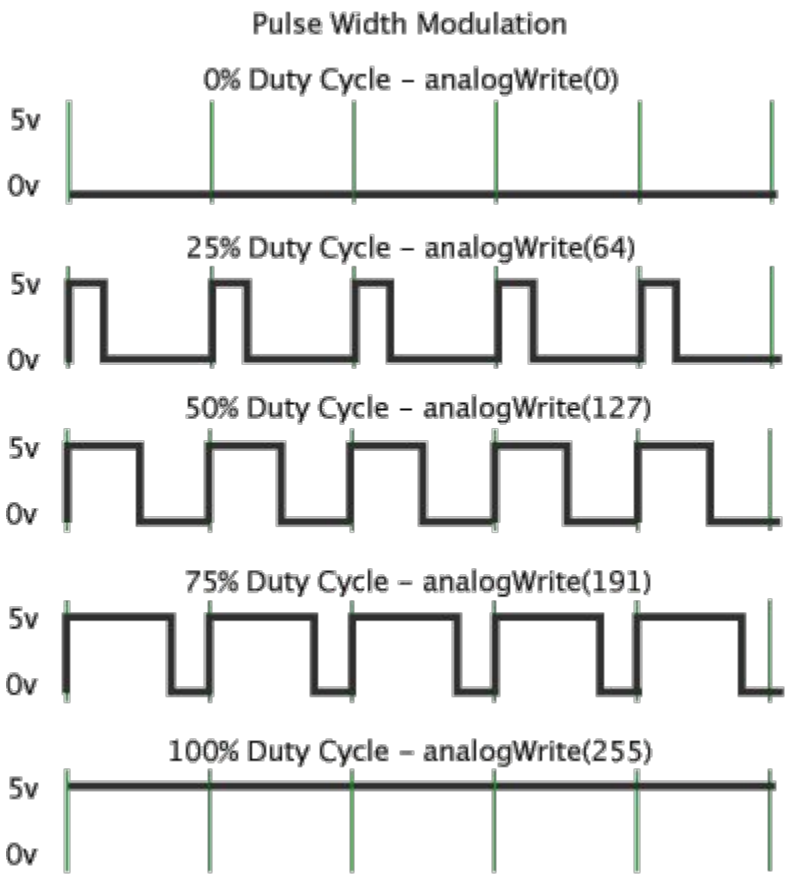

PWM

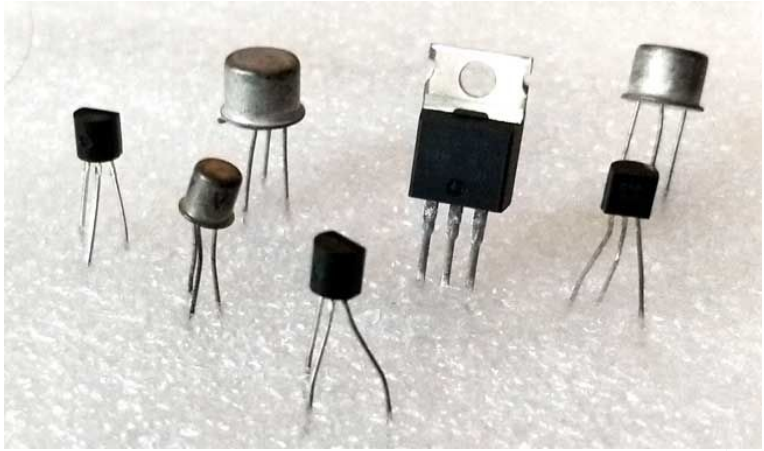

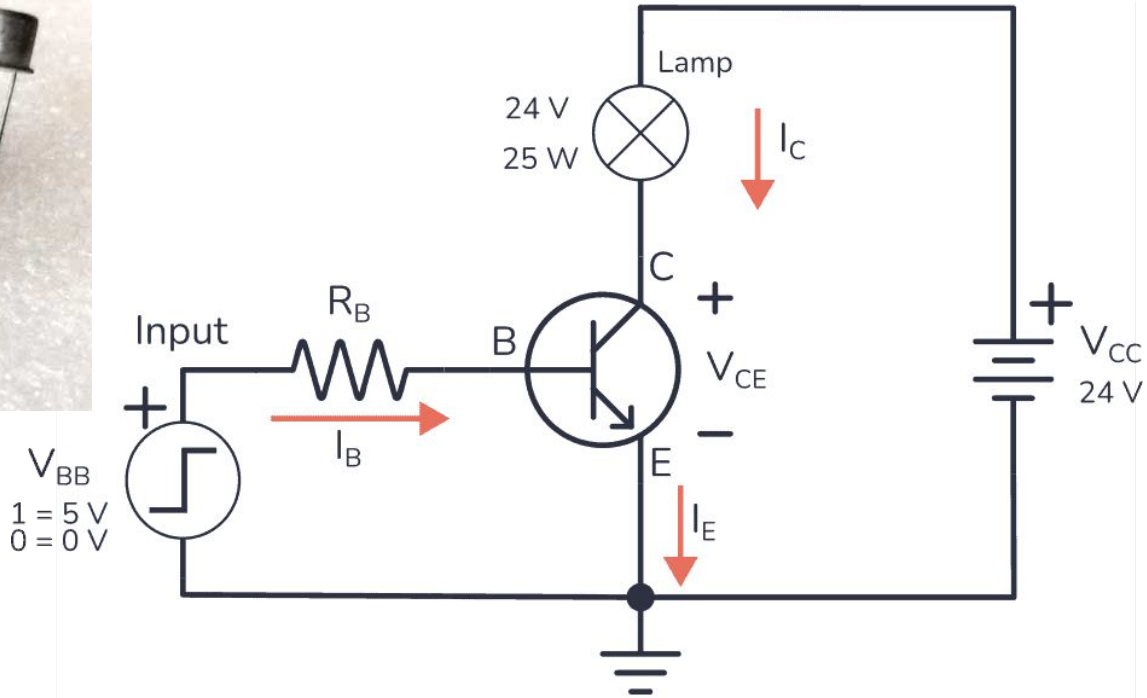

PWM - H bridge

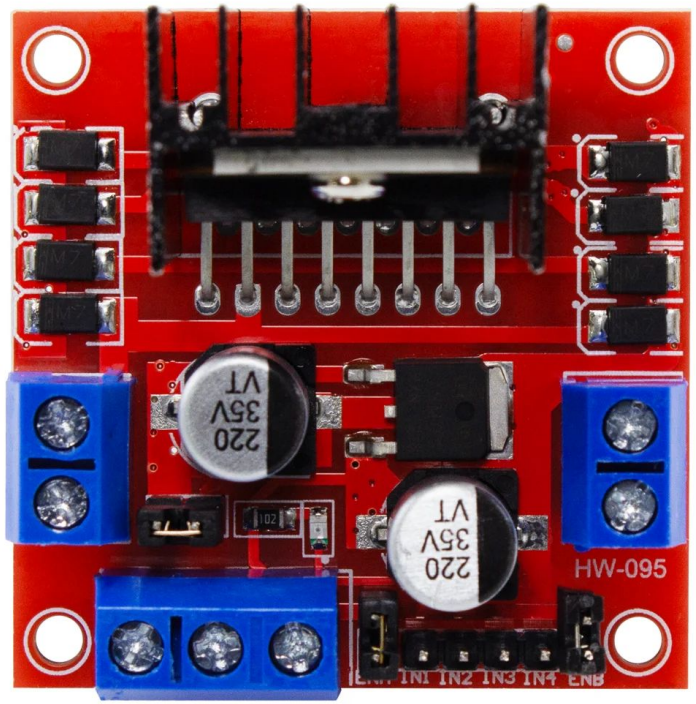
ENB IN4 IN3 IN2 IN1
220
35V
VT
220
35V
VT
HW-095

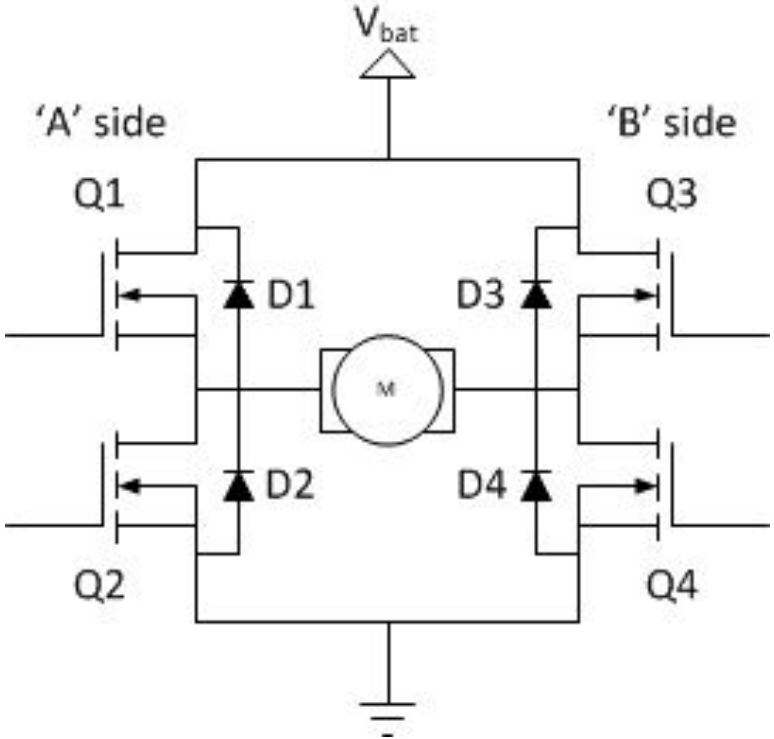
V_{bat}
'A' side
'B' side
Q1
Q3
D1
D3
M
D2
D4
Q2
Q4

PWM

Header part

```
#include <stdio.h>
#include "freertos/FreeRTOS.h"
#include "freertos/task.h"
#include "freertos/queue.h"
#include "driver/ledc.h"
#include "esp_log.h"

#define PWM_GPIO 18
#define PWM_FREQ 5000
#define PWM_RES  LEDC_TIMER_10_BIT
#define PWM_MAX  1023
#define SPEED_MODE LEDC_LOW_SPEED_MODE // LEDC_HIGH_SPEED_MODE

#define RTOS_delay(x) vTaskDelay(pdMS_TO_TICKS(x))
#define TAG "PWM_TAG"
QueueHandle_t pwmQueue;
```

PWM

```c
void pwm_init()
{
    ledc_timer_config_t timer = {
        .speed_mode       = SPEED_MODE,
        .timer_num        = LEDC_TIMER_0,
        .duty_resolution  = PWM_RES,
        .freq_hz          = PWM_FREQ,
        .clk_cfg          = LEDC_AUTO_CLK
    };
    ledc_timer_config(&timer);
    ledc_channel_config_t channel = {
        .gpio_num   = PWM_GPIO,
        .speed_mode = SPEED_MODE,
        .channel    = LEDC_CHANNEL_0,
        .timer_sel  = LEDC_TIMER_0,
        .duty       = 0,
        .hpoint     = 0
    };
    ledc_channel_config(&channel);
}
```

```c
void pwm_task(void *pvParameters)
{
    int duty;
    while(1)
    {
        if(xQueueReceive(pwmQueue, &duty, portMAX_DELAY))
        {
            ledc_set_duty(SPEED_MODE, LEDC_CHANNEL_0, duty);
            ledc_update_duty(SPEED_MODE, LEDC_CHANNEL_0);
            ESP_LOGI(TAG, "Duty recibido: %d", duty);
        }
    }
}
```

PWM

```c
void generator_task(void *pvParameters)
{
    int duty = 0;
    while(1)
    {
        xQueueSend(pwmQueue, &duty, portMAX_DELAY);
        ESP_LOGI(TAG, "Duty enviado: %d", duty);
        duty += 50;
        if(duty > PWM_MAX)
            duty = 0;
        RTOS_delay(500);
    }
}
```

```c
void app_main()
{
    pwm_init();
    pwmQueue = xQueueCreate(5, sizeof(int));
    xTaskCreate(pwm_task, "PWM_Task", 2048, NULL, 5, NULL);
    xTaskCreate(generator_task, "Generator_Task", 2048, NULL, 4, NULL);
}
```

Time measurement

Time measurement

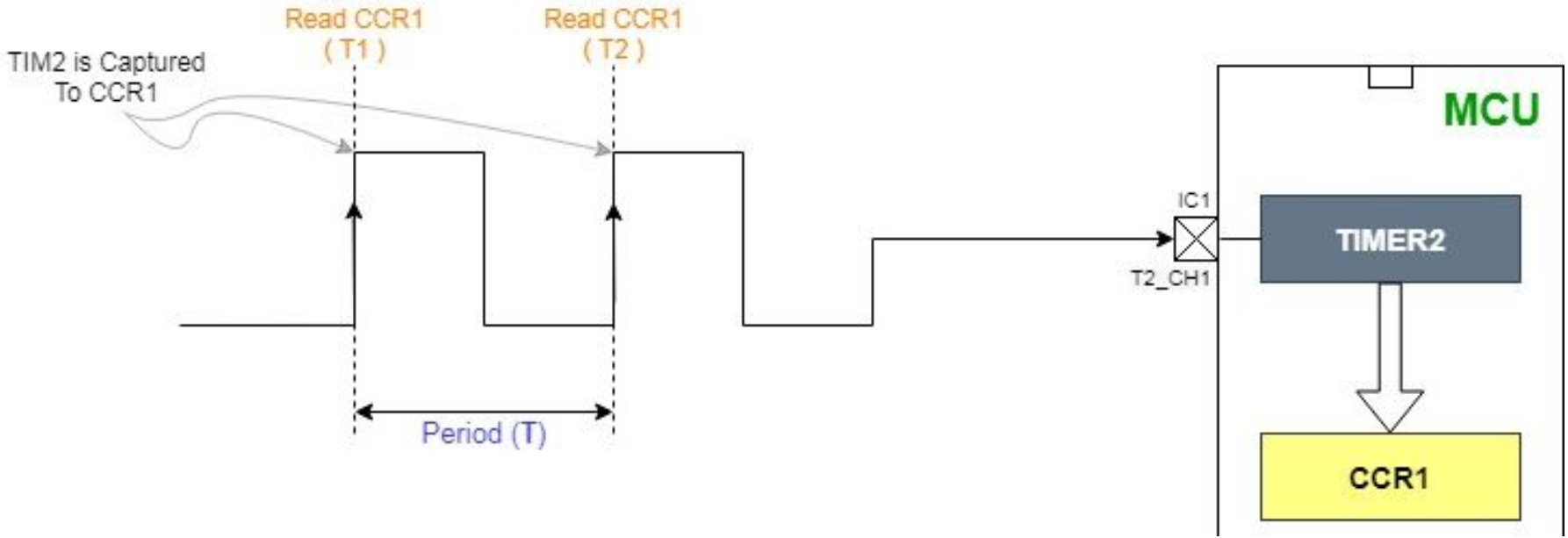

Time measurement

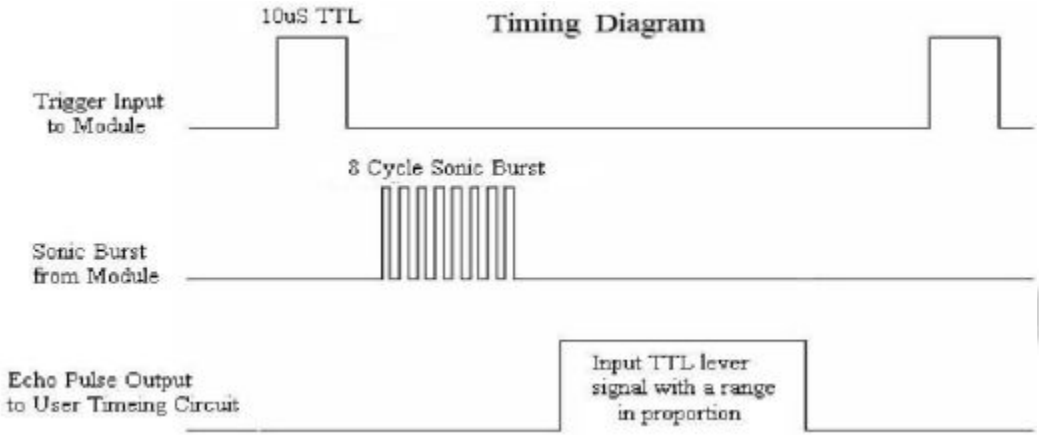

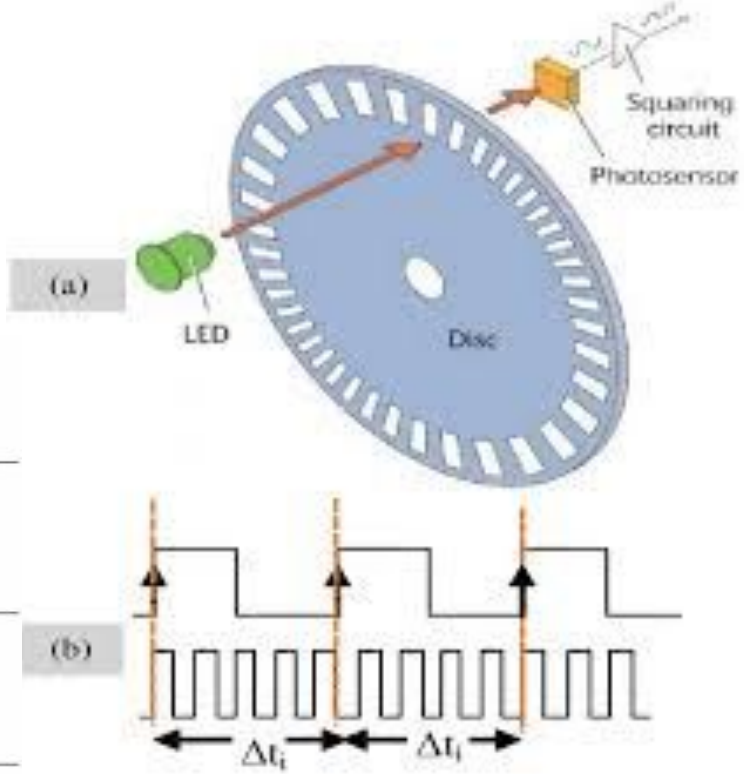

DHT11

Datasheet

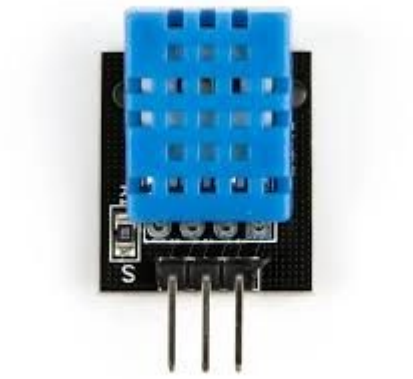

El DHT11 es un sensor digital de bajo costo para medir temperatura y humedad relativa

Utiliza una interfaz serial de un solo cable (one-wire) para enviar datos calibrados (alta exigencia de timing)

Se debe actualizar la lectura de datos cada 1-2 segundos.

Incluye un sensor capacitivo de humedad y un termistor NTC para temperatura.

Señal de Salida: Digital.

Voltaje de Operación: 3.3V a 5V DC.

Precisión y Rango:

Humedad: 20-90%.

Temperatura: 0 a 50°C

IIC

Interface de comunicación síncrona

- Sensores: Acelerómetros, IMUs
- Pantallas
- Real Time Clocks

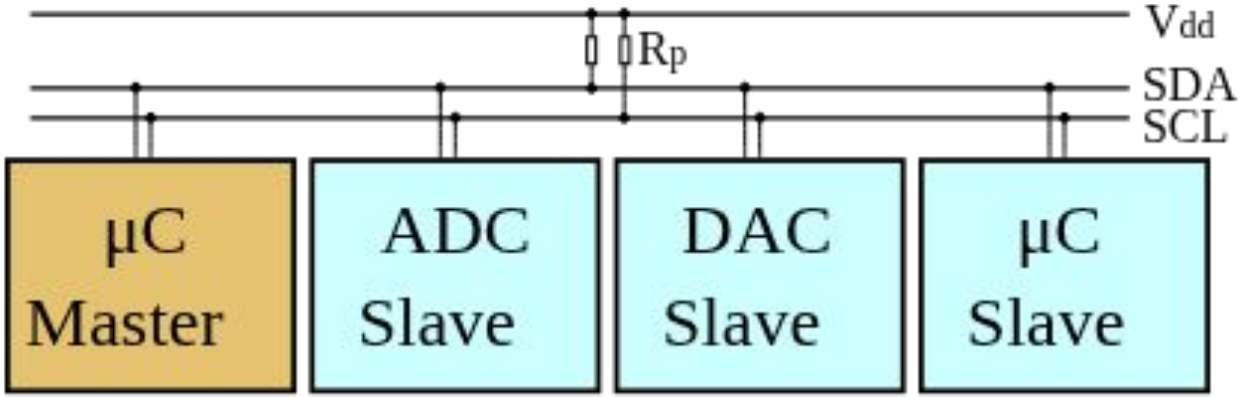

IIC

- Solo dos hilos: Usa una línea de datos (SDA) y una de reloj (SCL), ambas requieren resistencias pull-up.
- Direccionamiento: El maestro envía la dirección del esclavo (7 bits) + bit de lectura/escritura (1 bit) para iniciar la comunicación.
- Confirmación (ACK/NACK): Cada byte transmitido es seguido por un bit de reconocimiento (ACK) del receptor, lo que confirma la recepción.
- Velocidad: Las velocidades estándar son 100 kbit/s (modo estándar), 400 kbit/s (modo rápido) y hasta 3.4 Mbit/s (modo alta velocidad).
- Multimaestro: Soporta múltiples maestros y esclavos en el mismo bus.
- Fin de comunicación: Se indica mediante una transición de bajo a alto en SDA mientras SCL está alto (condición de STOP).
- Ventajas del I2C:
- Requiere pocos pines del microcontrolador.
- Simplifica el cableado al permitir conectar hasta 127/128 dispositivos en el mismo bus.
- Es robusto para comunicación entre chips en la misma placa

IIC

Discrete level converters

unidirectional

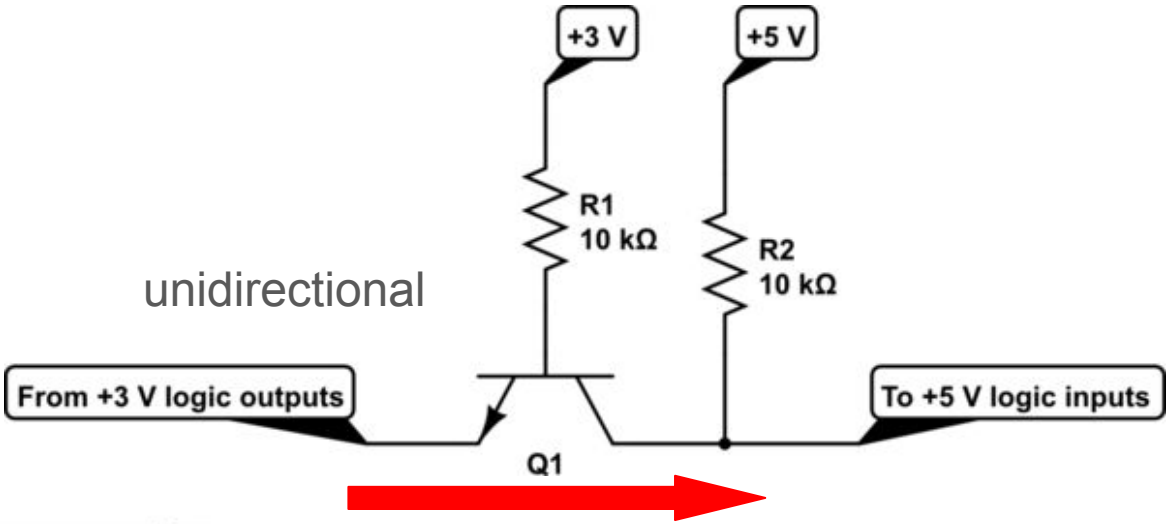

bidirectional

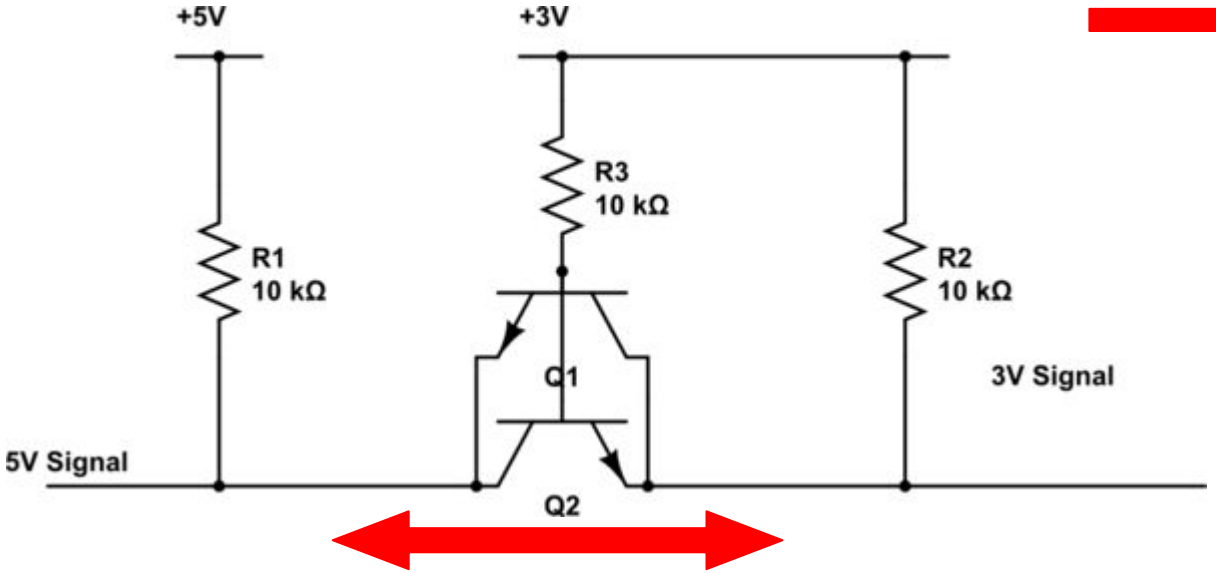

IIC

Sensores ambientales

- Temperatura (ej: TMP102, LM75)
- Temperatura y humedad (ej: DHT12, SHT31)
- Presión atmosférica (ej: BMP180, BME280)
- Calidad del aire / gas (ej: CCS811, MQ + ADC)

Sensores de luz

- Luz ambiental (BH1750)
- Color (TCS34725)

Sensores de movimiento

- Acelerómetros (ADXL345)
- Giroscopios (L3G4200D)
- IMU (MPU6050, MPU9250)

Sensores magnéticos

- Magnetómetros (HMC5883L)

Sensores de distancia

- ToF (VL53L0X)

Memorias

- EEPROM (24LC256, AT24Cxx)

Relojes en tiempo real (RTC)

- DS1307
- DS3231

Pantallas y dispositivos de salida

- Pantallas OLED (SSD1306)
- LCD con módulo I2C (PCF8574)

IIC

DS1307

- RTC: Reloj calendario
- Interfaz a 5V (Elevadores)

DS1307 8-Pin DIP (300-mil)

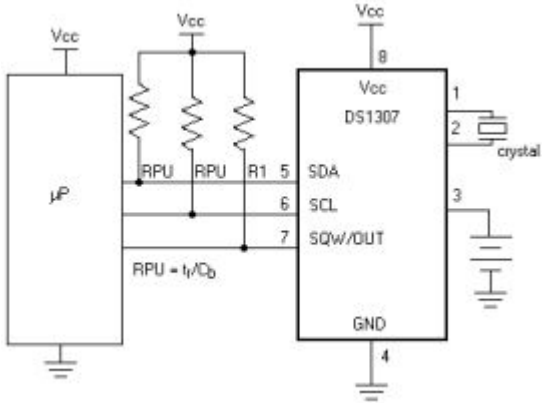

	BIT7							BIT0	
00H	CH	10 SECONDS			SECONDS				00–59
	0	10 MINUTES			MINUTES				00–59
	0	12 / 24	10 HR A/P	10 HR	HOURS				01–12 00–23
	0	0	0	0	0	DAY			1–7
	0	0	10 DATE		DATE				01–28/29 01–30 01–31
	0	0	0	10 MONTH	MONTH				01–12
	10 YEAR				YEAR				00–99
07H	OUT	0	0	SQWE	0	0	RS1	RS0	

DATA WRITE – SLAVE RECEIVER MODE Figure 6

S	<Slave Address> 1101000	<R/W> 0	A	<Word Address (n)> XXXXXXXX	A	<Data(n)> XXXXXXXX	A	<Data (n+1)> XXXXXXXX	A	<Data (n+X)> XXXXXXXX	A	P

S – START
A – ACKNOWLEDGE
P – STOP
*R/W – READ/WRITE OR DIRECTION BIT.

DATA TRANSFERRED (X+1 BYTES + ACKNOWLEDGE)

ADDRESS = D0h

DATA READ – SLAVE TRANSMITTER MODE Figure 7

S	<Slave Address> 1101000	<R/W> 1	A	<Data(n)> XXXXXXXX	A	<Data(n+1)> XXXXXXXX	A	<Data (n+2)> XXXXXXXX	A	<Data (n+X)> XXXXXXXX	Ā	P

S – START
A – ACKNOWLEDGE
P – STOP
Ā – NOT ACKNOWLEDGE

DATA TRANSFERRED (X+1 BYTES + ACKNOWLEDGE); NOTE: LAST DATA BYTE IS FOLLOWED BY A NOT ACKNOWLEDGE (Ā) SIGNAL)

*R/W – READ/WRITE OR DIRECTION BIT

ADDRESS = D1h

SPI

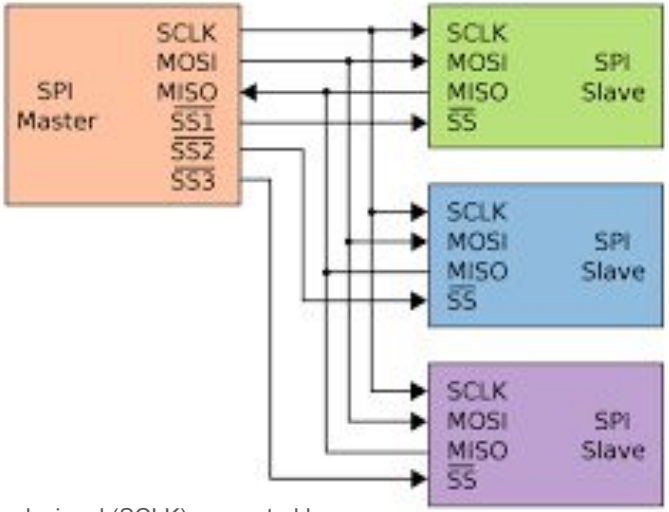

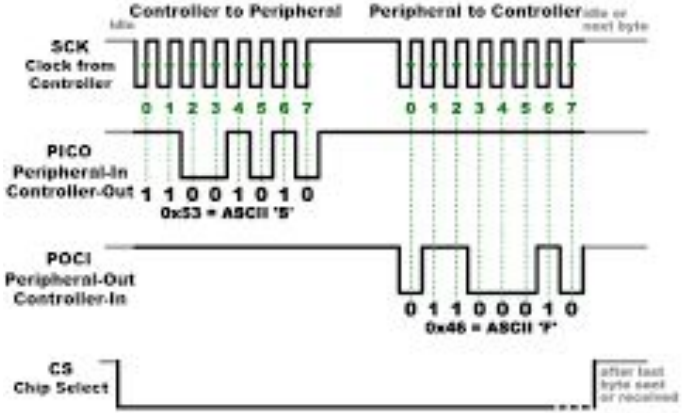

Synchronous Operation: Uses a shared clock signal (SCLK) generated by a single master device to synchronize data bits between the master and slave.

Full-Duplex Communication: Features separate lines for transmitting (MOSI) and receiving (MISO) data, allowing both to happen simultaneously.

Four-Wire Interface: Typically requires four signal lines:

SCLK: Serial Clock.

MOSI (Master Out Slave In): Data from master to slave.

MISO (Master In Slave Out): Data from slave to master.

SS/CS (Slave Select/Chip Select): Used by the master to select a specific slave device.

High Speed: Often operates at much higher clock frequencies than I²C or UART, ranging from 1 Mbps to over 50 Mbps.

No Addressing Overhead: Unlike I²C, SPI doesn't use software addresses. The master simply pulls the hardware Slave Select line low to talk to a specific chip.

Configurable Clocking (4 Modes): Supports four modes defined by Clock Polarity (CPOL) and Clock Phase (CPHA), which determine if the clock idles high/low and whether data is sampled on the rising or falling edge.

SPI

MAX7219

- LED matrix controller
- SPI protocol
- 3V3 compatible

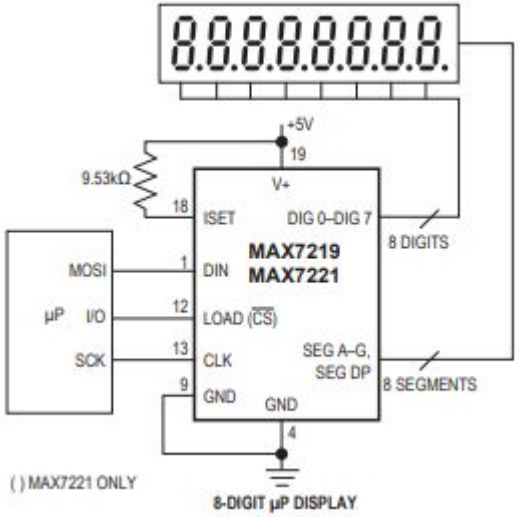

REGISTER	ADDRESS					HEX CODE
	D15–D12	D11	D10	D9	D8	
No-Op	X	0	0	0	0	0xX0
Digit 0	X	0	0	0	1	0xX1
Digit 1	X	0	0	1	0	0xX2
Digit 2	X	0	0	1	1	0xX3
Digit 3	X	0	1	0	0	0xX4
Digit 4	X	0	1	0	1	0xX5
Digit 5	X	0	1	1	0	0xX6
Digit 6	X	0	1	1	1	0xX7
Digit 7	X	1	0	0	0	0xX8
Decode Mode	X	1	0	0	1	0xX9
Intensity	X	1	0	1	0	0xXA
Scan Limit	X	1	0	1	1	0xXB
Shutdown	X	1	1	0	0	0xXC
Display Test	X	1	1	1	1	0xXF

Table 1. Serial-Data Format (16 Bits)

D15	D14	D13	D12	D11	D10	D9	D8	D7	D6	D5	D4	D3	D2	D1	D0
X	X	X	X	ADDRESS				MSB	DATA						LSB