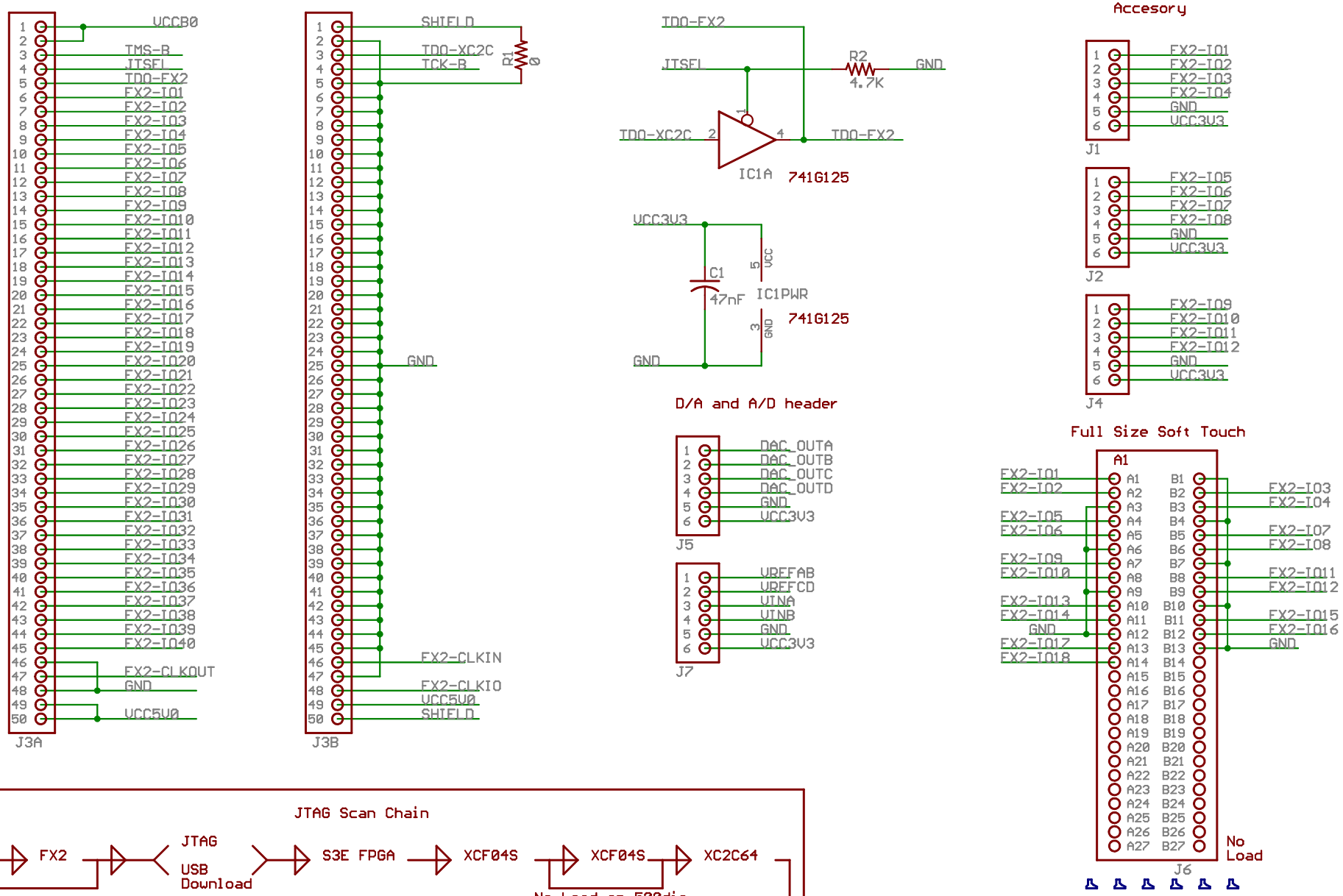
VCCB0
TMS-B
JTSEL
TDO-FX2
FX2-IO1
FX2-IO2
FX2-IO3
FX2-IO4
FX2-IO5
FX2-IO6
FX2-IO7
FX2-IO8
FX2-IO9
FX2-IO10
FX2-IO11
FX2-IO12
FX2-IO13
FX2-IO14
FX2-IO15
FX2-IO16
FX2-IO17
FX2-IO18
FX2-IO19
FX2-IO20
FX2-IO21
FX2-IO22
FX2-IO23
FX2-IO24
FX2-IO25
FX2-IO26
FX2-IO27
FX2-IO28
FX2-IO29
FX2-IO30
FX2-IO31
FX2-IO32
FX2-IO33
FX2-IO34
FX2-IO35
FX2-IO36
FX2-IO37
FX2-IO38
FX2-IO39
FX2-IO40
FX2-CLKOUT
GND
VCC5V0
J3A
SHIELD
TDO-XC2C
TCK-B
R1
0
GND
FX2-CLKIN
FX2-CLKIO
VCC5V0
SHIELD
J3B
TDO-FX2
JTSEL
R2
4.7K
GND
TDO-XC2C
IC1A
74LG125
VCC3V3
C1
47nF
IC1PWR
74LG125
GND
D/A and A/D header
DAC_OUTA
DAC_OUTB
DAC_OUTC
DAC_OUTD
GND
VCC3V3
J5
VREFAB
VREFCD
VINA
VINB
GND
VCC3V3
J7
6 Pin Header
Accesory
FX2-IO1
FX2-IO2
FX2-IO3
FX2-IO4
GND
VCC3V3
J1
FX2-IO5
FX2-IO6
FX2-IO7
FX2-IO8
GND
VCC3V3
J2
FX2-IO9
FX2-IO10
FX2-IO11
FX2-IO12
GND
VCC3V3
J4
Full Size Soft Touch
A1
FX2-IO1
FX2-IO2
FX2-IO5
FX2-IO6
FX2-IO9
FX2-IO10
FX2-IO13
FX2-IO14
GND
FX2-IO17
FX2-IO18
FX2-IO3
FX2-IO4
FX2-IO7
FX2-IO8
FX2-IO11
FX2-IO12
FX2-IO15
FX2-IO16
GND
No
Load
J6
JTAG Scan Chain
FX2
JTAG
USB
Download
S3E FPGA
XCF04S
XCF04S
XC2C64
No Load on 500die
Spartan 3E Starter Board
Digilent Inc. Copyright 2005, 2006
Engineer: CC
SHEET: Hirose and Expansion Connectors
Author: GMA
TITLE: S3E Starter
Rev: D
Doc#: 500-087
Date: 02/02/06
Sheet:1/14
SPARTAN 3E
SPARTAN 3E
Digilent Inc.
Xilinx.com
Micron
WEEE
SMSC
Intel
Strataflash
Linear
Technology
Texas
Instruments
Xilinx
Platform
Flash
ST
Micro

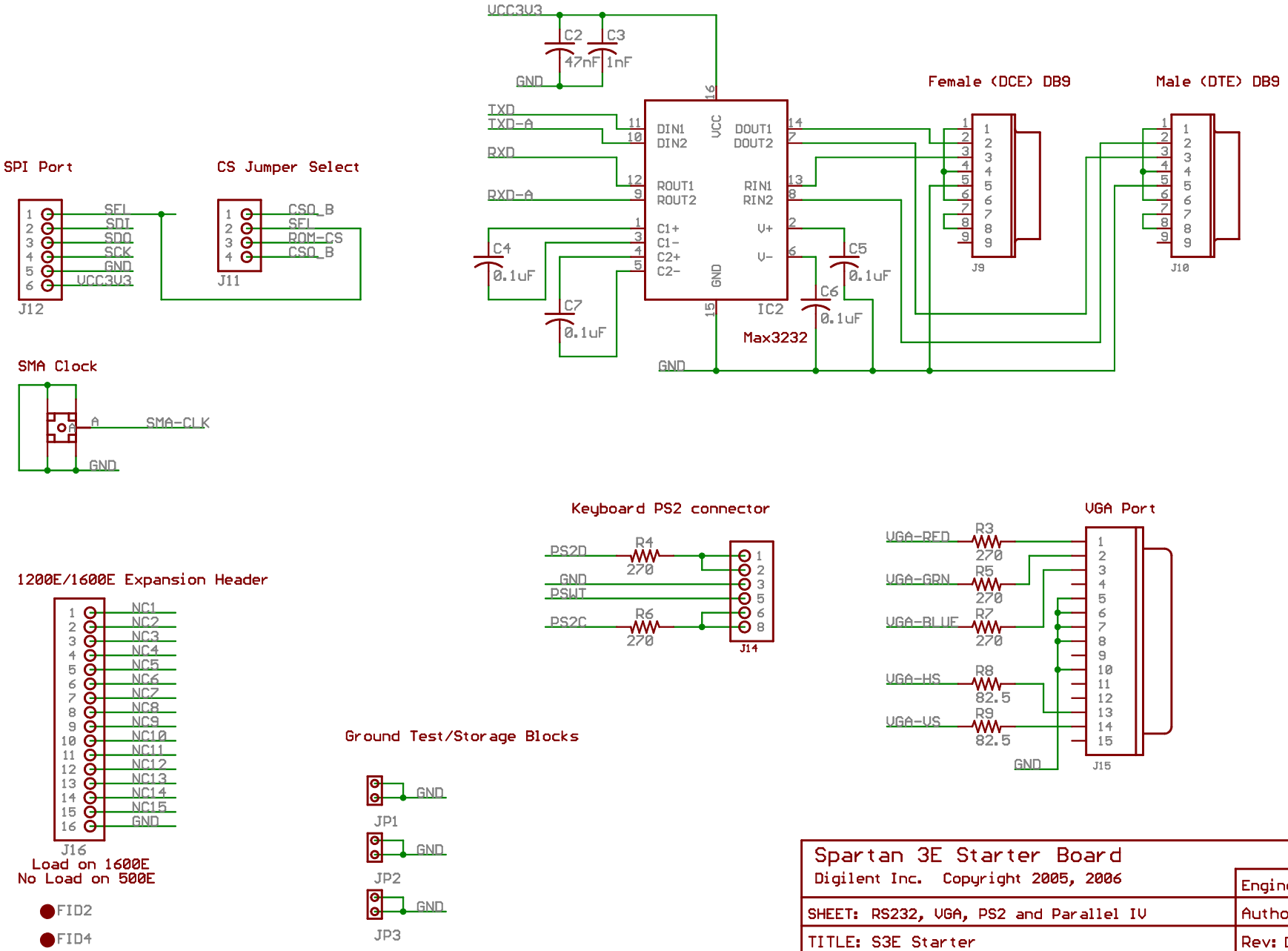

Spartan 3E Starter Board Digilent Inc. Copyright 2005, 2006		Engineer: CC
SHEET: RS232, VGA, PS2 and Parallel IV		Author: GMA
TITLE: S3E Starter		Rev: D
Doc#: 500-087	Date: 02/02/06	Sheet: 2/14

Page 3 contains proprietary information and has been intentionally left blank.

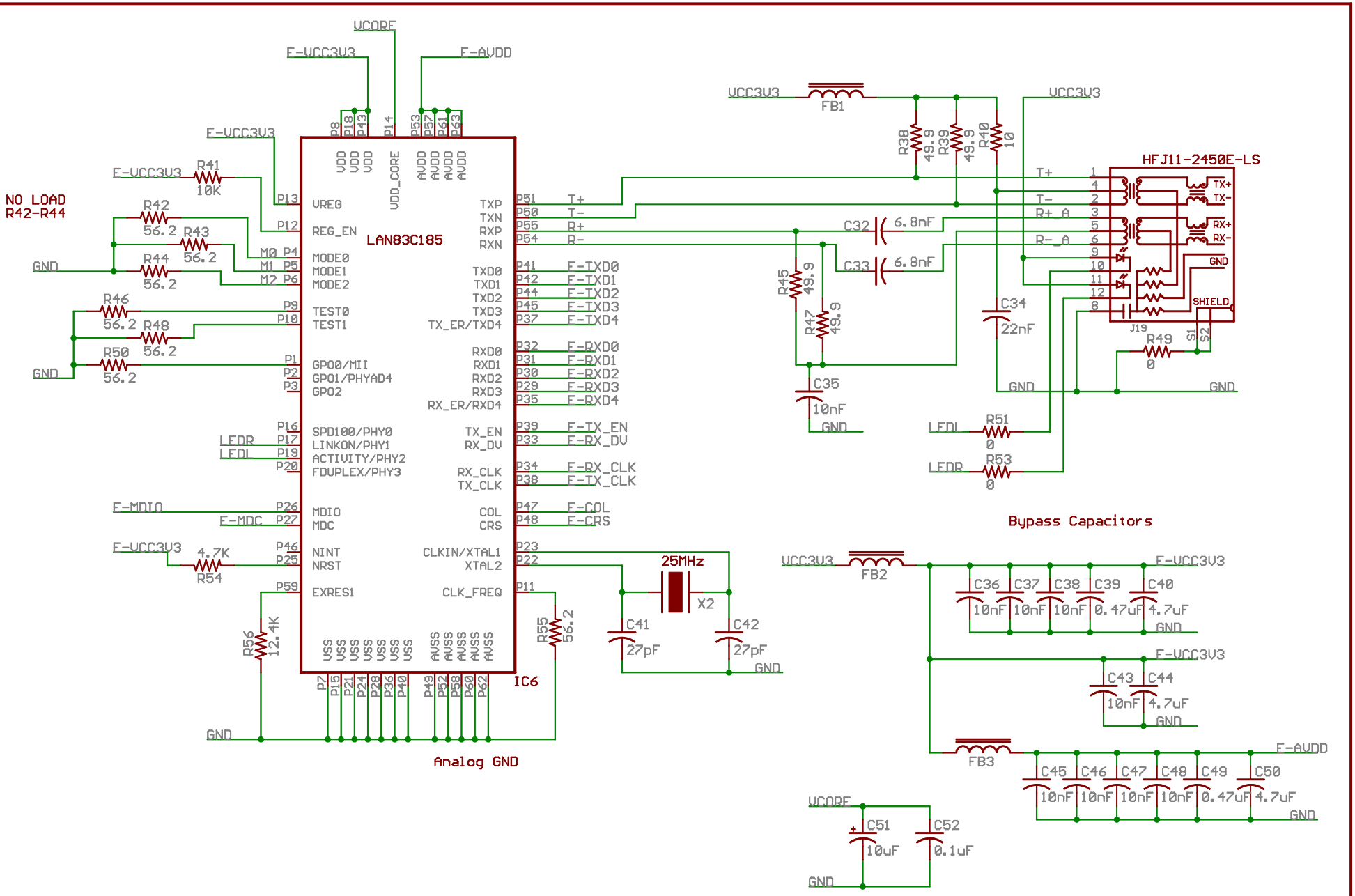
LAN83C185
IC6
HFJ11-2450E-LS
NO LOAD
R42-R44
Bypass Capacitors
Analog GND
25MHz
Spartan 3E Starter Board
Digilent Inc. Copyright 2005, 2006
Engineer: CC
SHEET: Ethernet Interface
Author: GMA
TITLE: S3E Starter
Rev: D
Doc#: 500-087
Date: 02/02/06
Sheet: 4/14

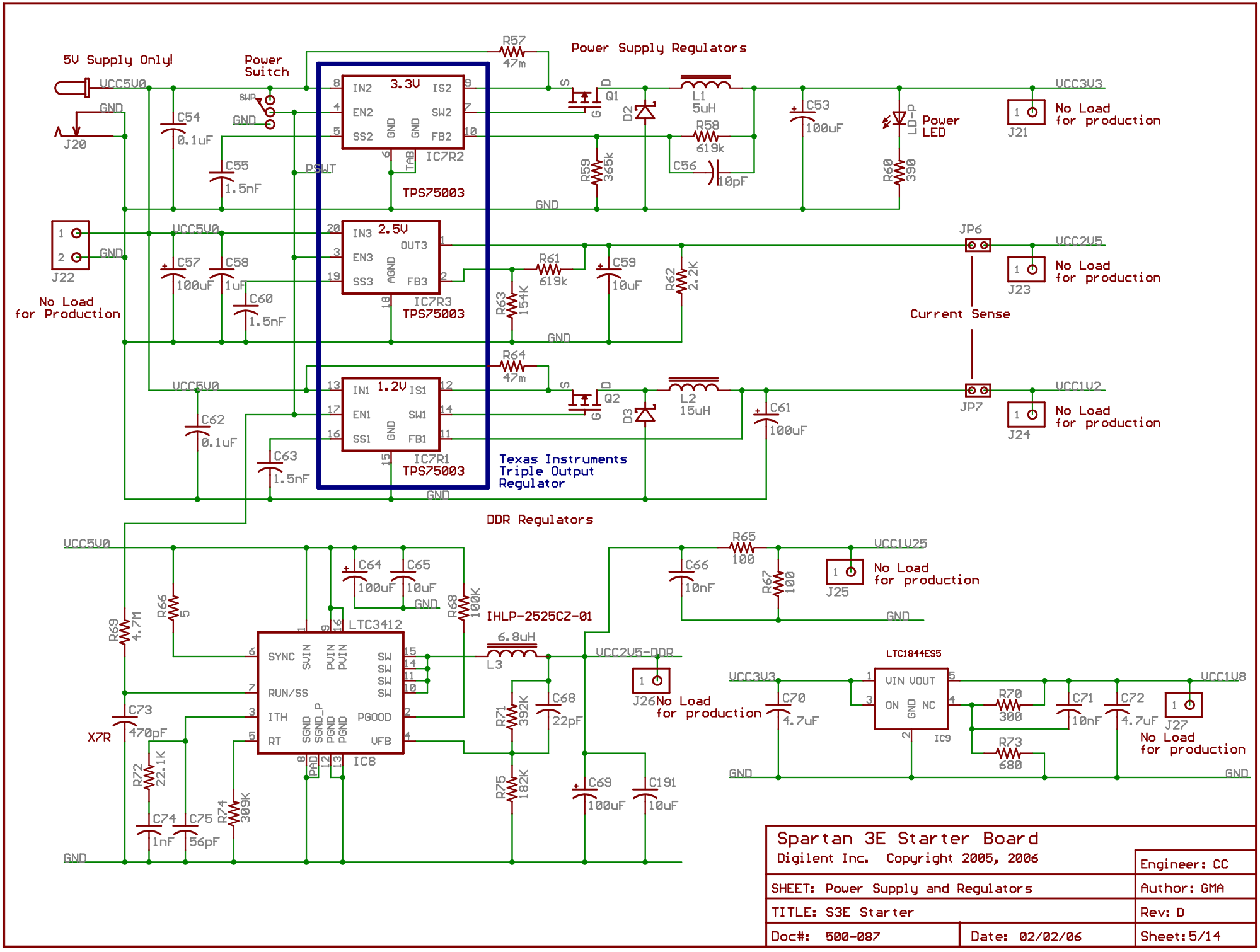

Spartan 3E Starter Board Digilent Inc. Copyright 2005, 2006		Engineer: CC
SHEET: Power Supply and Regulators		Author: GMA
TITLE: S3E Starter		Rev: D
Doc#: 500-087	Date: 02/02/06	Sheet:5/14

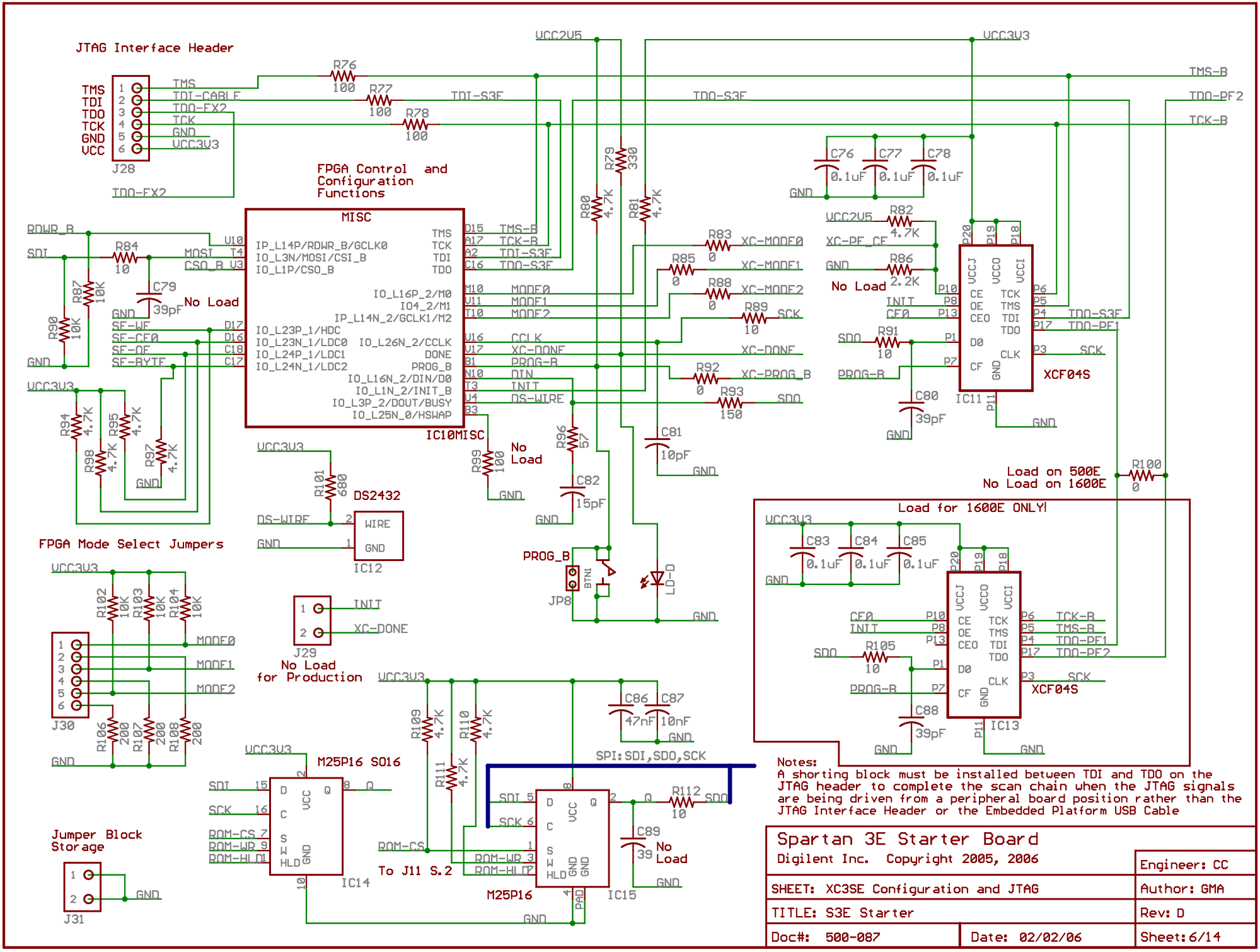
JTAG Interface Header
J28
FPGA Control and Configuration Functions
MISC
IC10MISC
No Load
FPGA Mode Select Jumpers
J30
DS2432
IC12
J29
No Load for Production
Jumper Block Storage
J31
M25P16 SO16
IC14
M25P16
IC15
SPI:SDI,SDO,SCK
To J11 S.2
PROG_B
JP8
LD-D
XCF04S
IC11
IC13
Load on 500E
No Load on 1600E
Load for 1600E ONLY!
Notes:
A shorting block must be installed between TDI and TDO on the JTAG header to complete the scan chain when the JTAG signals are being driven from a peripheral board position rather than the JTAG Interface Header or the Embedded Platform USB Cable
Spartan 3E Starter Board
Digilent Inc. Copyright 2005, 2006
Engineer: CC
SHEET: XC3SE Configuration and JTAG
Author: GMA
TITLE: S3E Starter
Rev: D
Doc#: 500-087
Date: 02/02/06
Sheet: 6/14

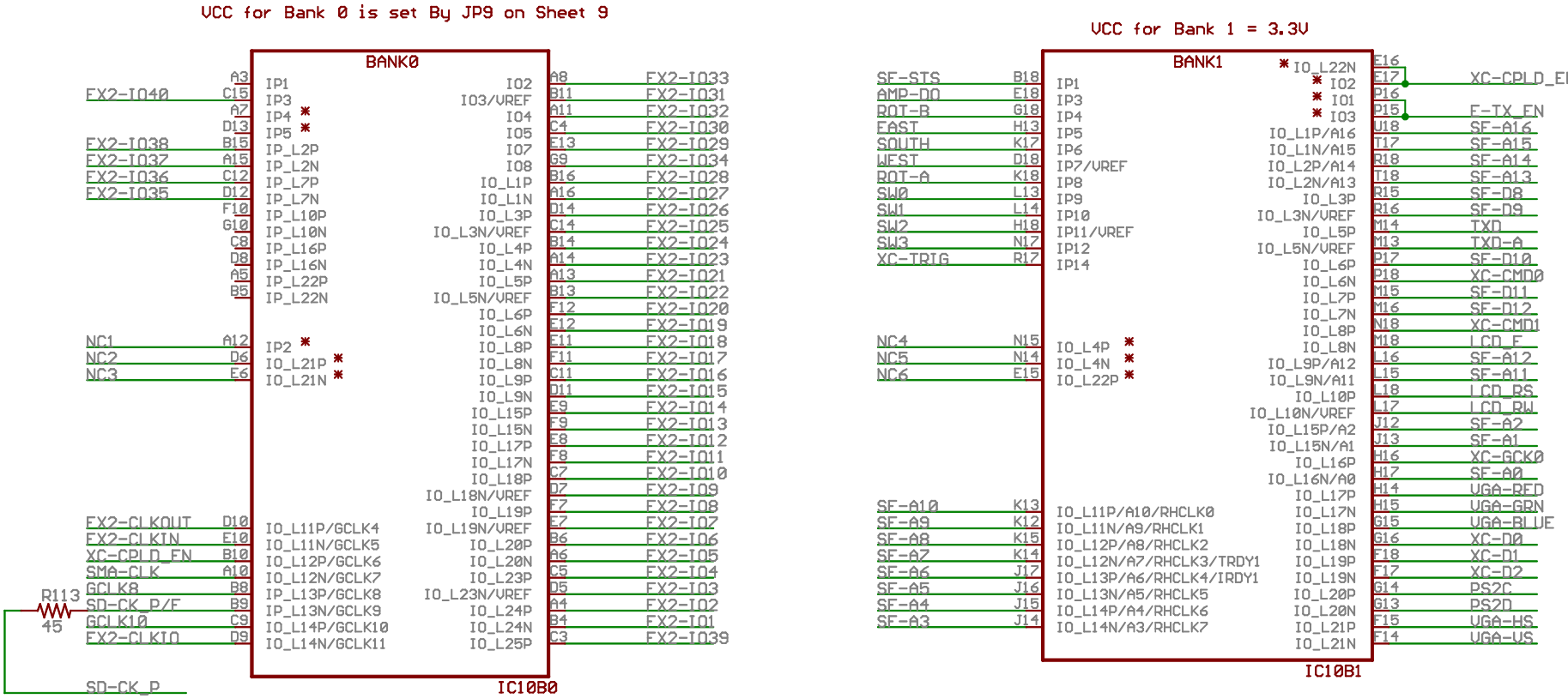

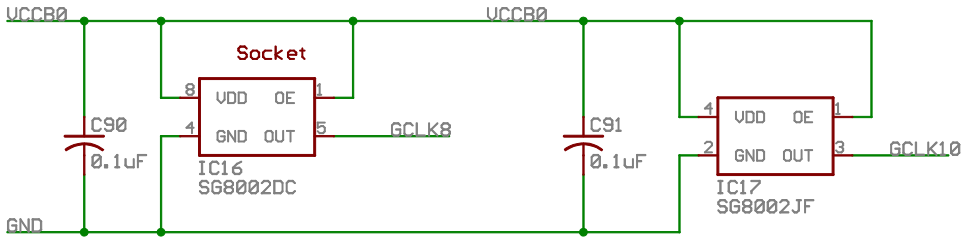

AD - A/D Converter (11)
AMP - Gain Amplifier (11)
DAC - D/A converter (11)
E- Ethernet (4)
FX2 - Hirose FX2 Connector (1)
ROM - M25P16 (6)
SD- SD RAM (12)
SF - StrataFlash (12)
ST - Soft Touch Connector (1)
U - USB (3)
XC - XC9572 (10)

* Notes are for pins that very between 500/1200/1600 dies

Spartan 3E Starter Board Digilent Inc. Copyright 2005, 2006		Engineer: CC
SHEET: XC3SE Banks 0 and 1, Clock ICs		Author: GMA
TITLE: S3E Starter		Rev: D
Doc#: 500-087	Date: 02/02/06	Sheet:7/14

Vcc for Bank 2 = 3.3V

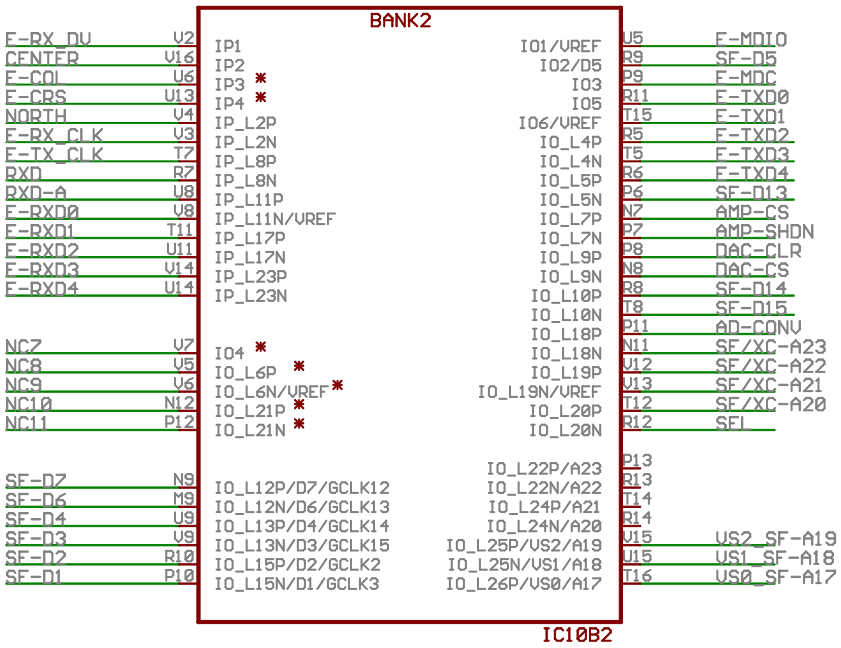

IC10B2

VCC vor Bank 3 = 2.5V DDR

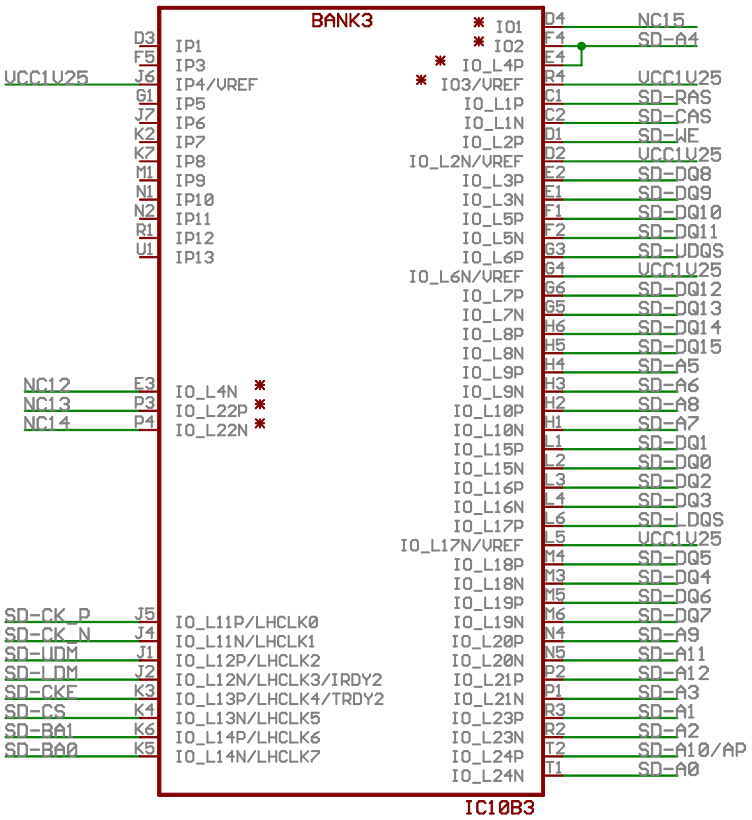

IC10B3

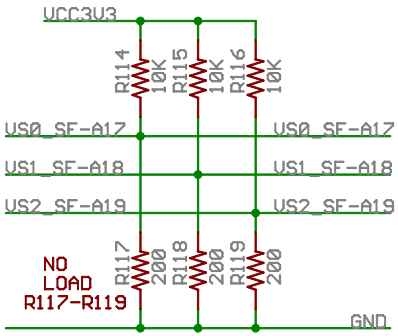

AD - A/D Converter (11)
AMP - Gain Amplifier (11)
DAC - D/A converter (11)
E- Ethernet (4)
FX2 - Hirose FX2 Connector (1)
ROM - M25P16 (6)
SD- SD RAM (12)
SF - StrataFlash (12)
ST - Soft Touch Connector (1)
U - USB (3)
XC - XC9572 (10)

* Notes are for pins that very between 500/1200/1600 dies

Spartan 3E Starter Board Digilent Inc. Copyright 2005, 2006		Engineer: CC
SHEET: XC3SE Banks 2 and 3		Author: GMA
TITLE: S3E Starter		Rev: D
Doc#: 500-087	Date: 02/02/06	Sheet: 8/14

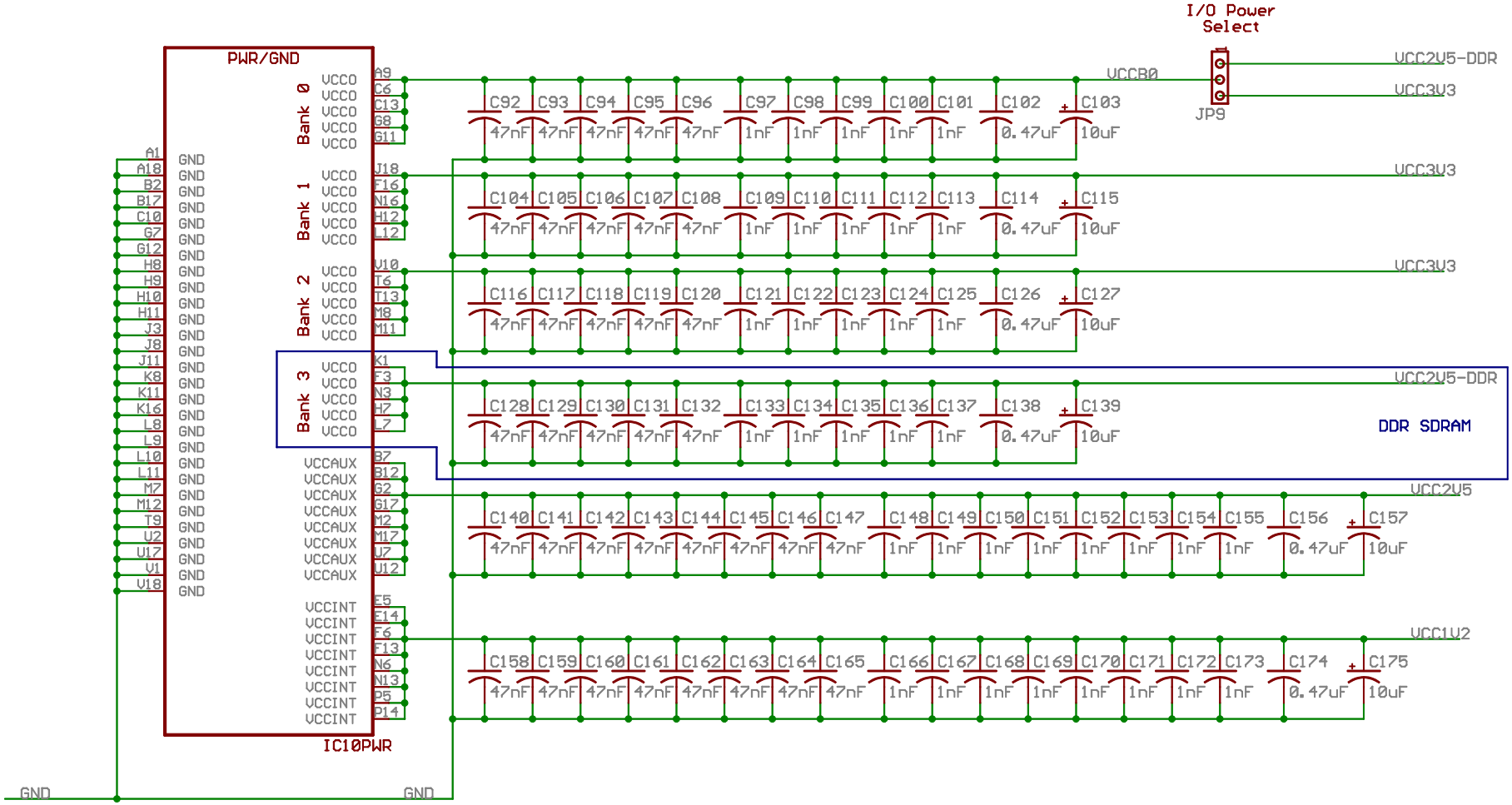

Spartan 3E Starter Board Digilent Inc. Copyright 2005, 2006		Engineer: CC
SHEET: XC3SE Power Decoupling		Author: GMA
TITLE: S3E Starter		Rev: D
Doc#: 500-087	Date: 02/02/06	Sheet: 9/14

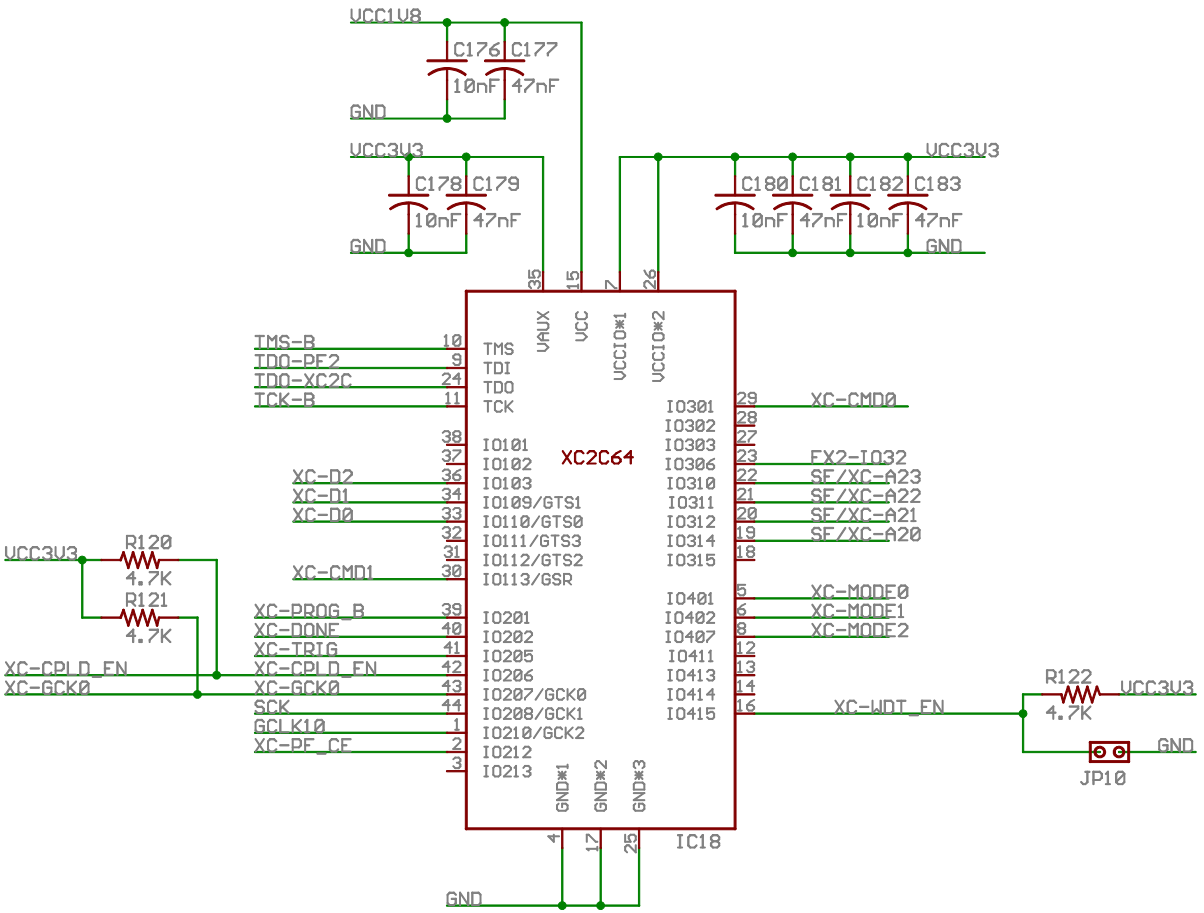

Spartan 3E Starter Board Digilent Inc. Copyright 2005, 2006		Engineer: CC
SHEET: XC2C64 CPLD		Author: GMA
TITLE: S3E Starter		Rev: D
Doc#: 500-087	Date: 02/02/06	Sheet:10/14

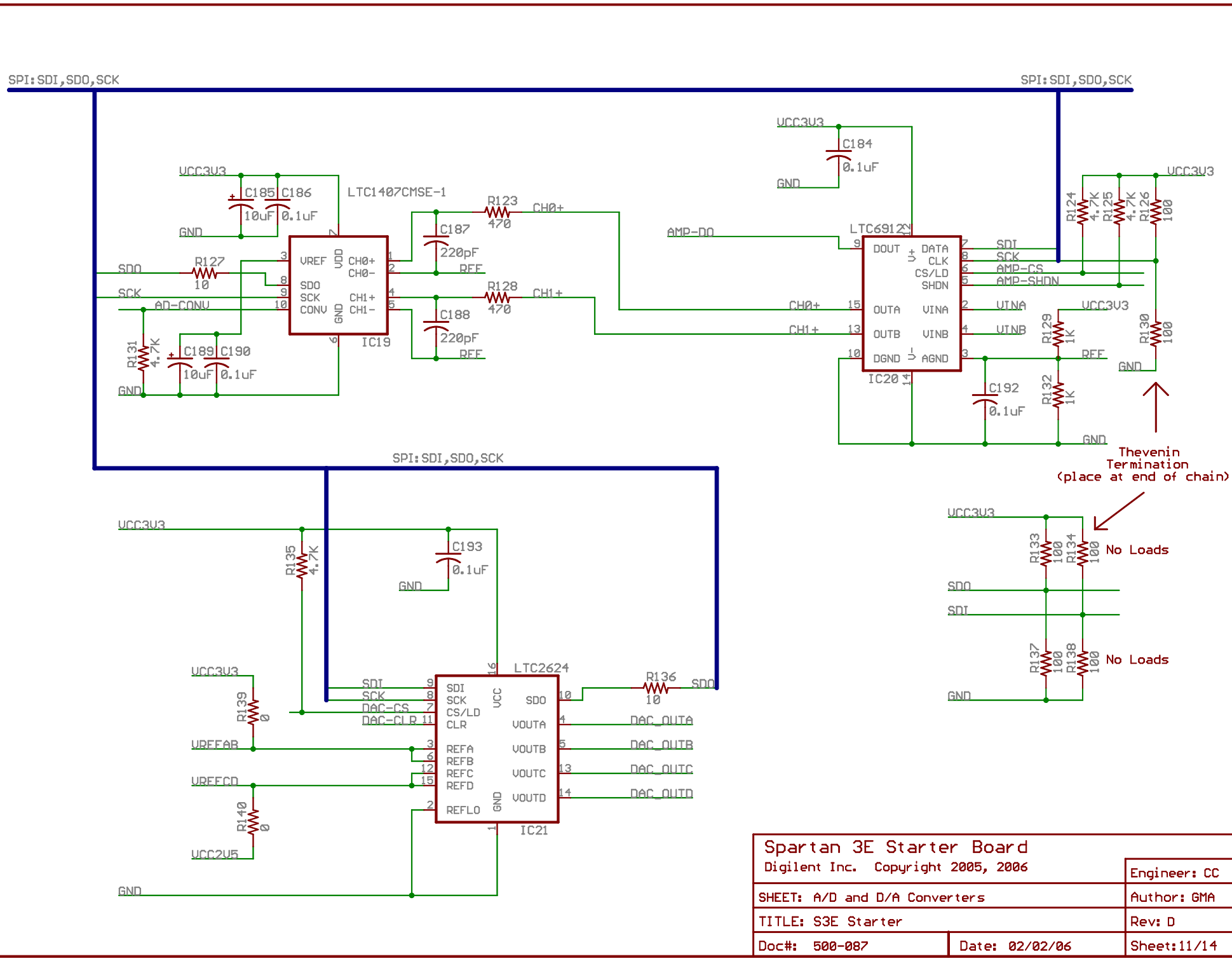
SPI:SDI,SDO,SCK
SPI:SDI,SDO,SCK
SPI:SDI,SDO,SCK
VCC3V3
GND
C184
0.1uF
C185
10uF
C186
0.1uF
LTC1407CMSE-1
IC19
R123
470
CH0+
C187
220pF
REF
R128
470
CH1+
C188
220pF
REF
R127
10
SDO
SCK
AD-CONV
R131
4.7K
C189
10uF
C190
0.1uF
AMP-DO
LTC6912
IC20
DOUT
DATA
CLK
CS/LD
SHDN
OUTA
OUTB
DGND
VINA
VINB
AGND
SDI
SCK
AMP-CS
AMP-SHDN
VINA
VINB
R124
4.7K
R125
4.7K
R126
100
R129
1K
R130
100
R132
1K
C192
0.1uF
Thevenin
Termination
(place at end of chain)
R133
100
R134
100
No Loads
R137
100
R138
100
No Loads
R135
4.7K
C193
0.1uF
LTC2624
IC21
SDI
SCK
DAC-CS
DAC-CLR
CS/LD
CLR
VCC
SDO
VOUTA
VOUTB
VOUTC
VOUTD
REFA
REFB
REFC
REFD
REFLO
GND
R136
10
DAC_OUTA
DAC_OUTB
DAC_OUTC
DAC_OUTD
R139
0
VREFAB
R140
0
VREFCD
VCC2V5
Spartan 3E Starter Board
Digilent Inc. Copyright 2005, 2006
Engineer: CC
SHEET: A/D and D/A Converters
Author: GMA
TITLE: S3E Starter
Rev: D
Doc#: 500-087
Date: 02/02/06
Sheet:11/14

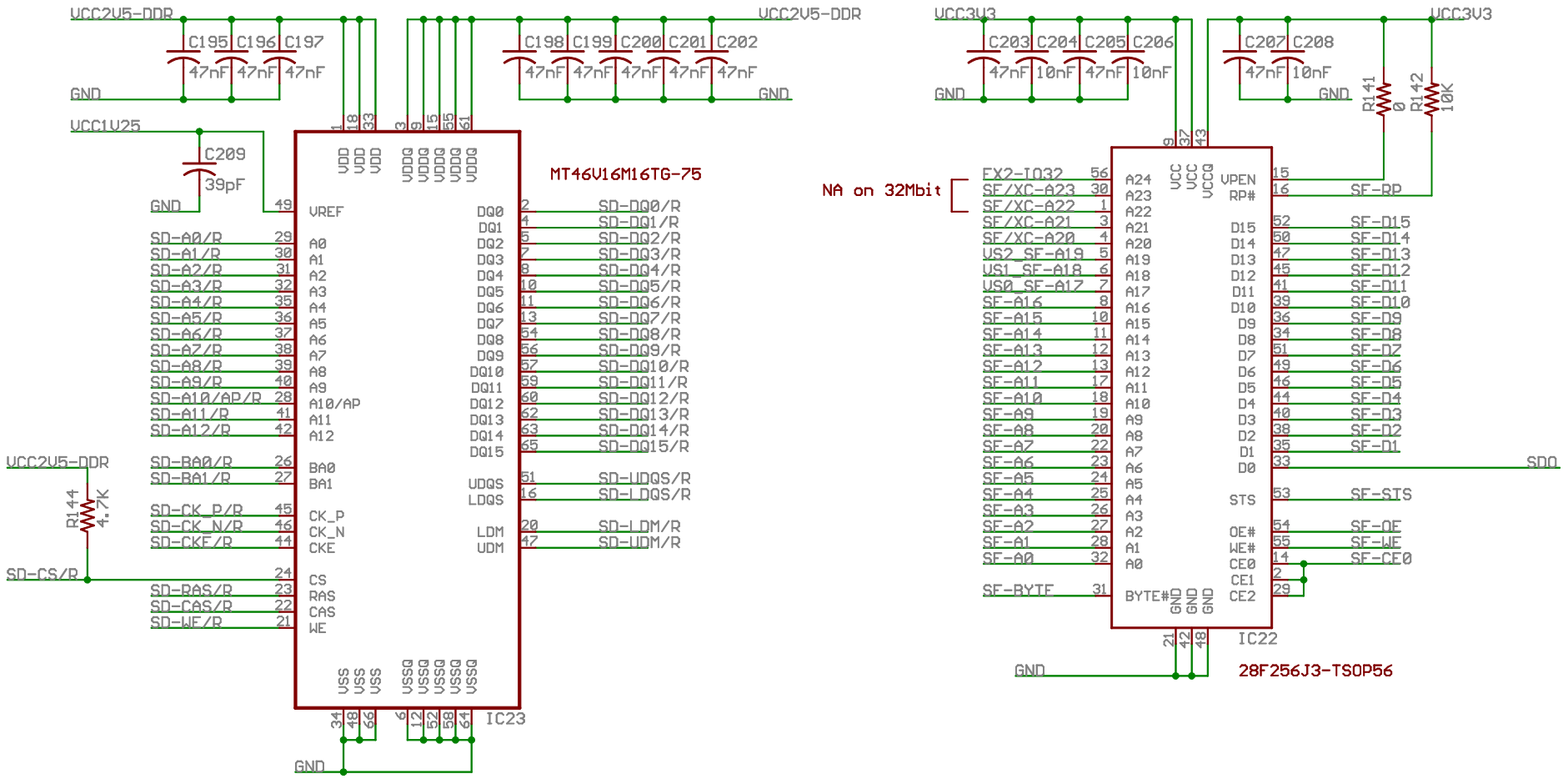

Spartan 3E Starter Board Digilent Inc. Copyright 2005, 2006		Engineer: CC
SHEET: DDR SDRAM and StrataFlash		Author: GMA
TITLE: S3E Starter		Rev: D
Doc#: 500-087	Date: 02/02/06	Sheet:12/14

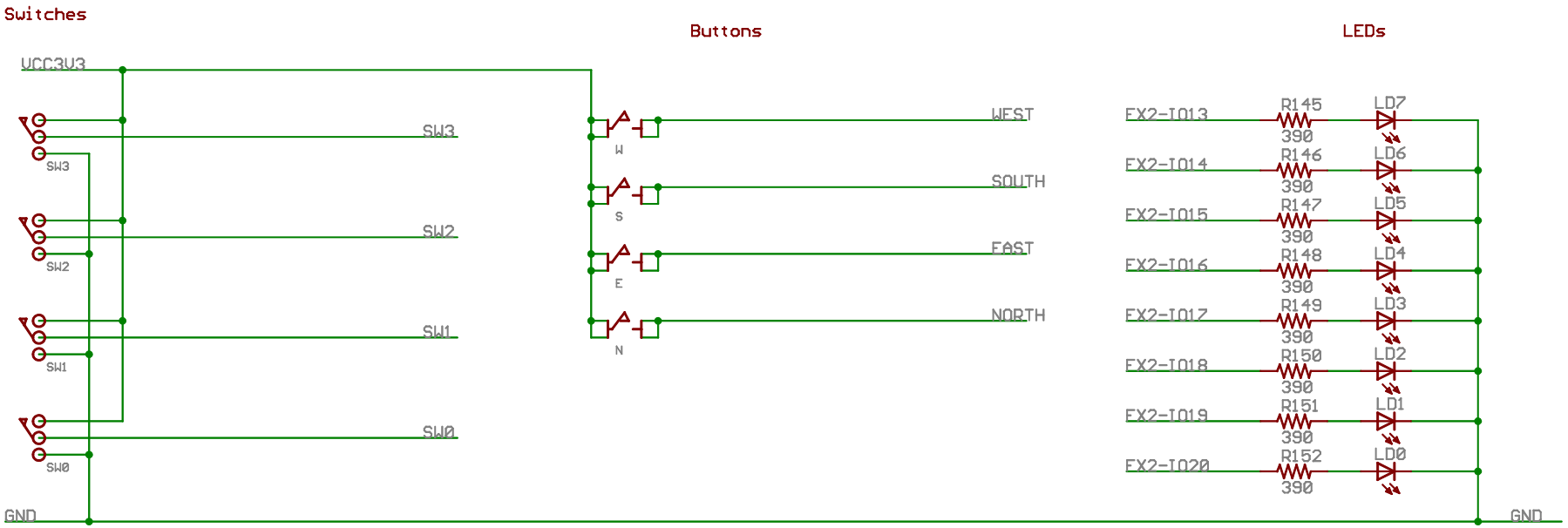

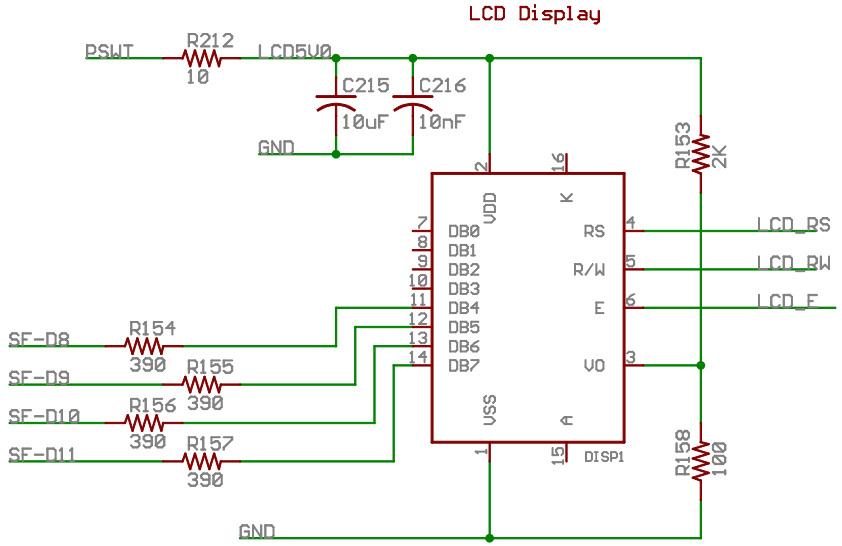

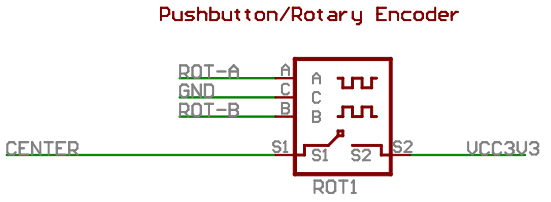

Spartan 3E Starter Board Digilent Inc. Copyright 2005, 2006		Engineer: CC
SHEET: LCD and General IOs		Author: GMA
TITLE: S3E Starter		Rev: D
Doc#: 500-087	Date: 02/02/06	Sheet:13/14

DDR Series Termination

SD-DQ0	R159 75	SD-DQ0/R
SD-DQ1	R160 75	SD-DQ1/R
SD-DQ2	R161 75	SD-DQ2/R
SD-DQ3	R162 75	SD-DQ3/R
SD-DQ4	R163 75	SD-DQ4/R
SD-DQ5	R164 75	SD-DQ5/R
SD-DQ6	R165 75	SD-DQ6/R
SD-DQ7	R166 75	SD-DQ7/R
SD-DQ8	R167 75	SD-DQ8/R
SD-DQ9	R168 75	SD-DQ9/R
SD-DQ10	R169 75	SD-DQ10/R
SD-DQ11	R170 75	SD-DQ11/R
SD-DQ12	R171 75	SD-DQ12/R
SD-DQ13	R172 75	SD-DQ13/R
SD-DQ14	R173 75	SD-DQ14/R
SD-DQ15	R174 75	SD-DQ15/R
SD-UDQS	R175 45	SD-UDQS/R
SD-LDQS	R176 45	SD-LDQS/R
SD-LDM	R177 45	SD-LDM/R
SD-UDM	R178 45	SD-UDM/R
SD-A0	R179 75	SD-A0/R

SD-CK_P	R180 45	SD-CK_P/R
	R181 150 No Load	
SD-CK_N	R182 45	SD-CK_N/R

SD-A1	R183 75	SD-A1/R
SD-A2	R184 75	SD-A2/R
SD-A3	R185 75	SD-A3/R
SD-A4	R186 75	SD-A4/R
SD-A5	R187 75	SD-A5/R
SD-A6	R188 75	SD-A6/R
SD-A7	R189 75	SD-A7/R
SD-A8	R190 75	SD-A8/R
SD-A9	R191 75	SD-A9/R
SD-A10/AP	R192 75	SD-A10/AP/R
SD-A11	R193 75	SD-A11/R
SD-A12	R194 75	SD-A12/R
SD-BA0	R195 45	SD-BA0/R
SD-BA1	R196 45	SD-BA1/R
SD-CKE	R197 45	SD-CKE/R
SD-CS	R198 45	SD-CS/R
SD-RAS	R199 45	SD-RAS/R
SD-CAS	R200 45	SD-CAS/R
SD-WE	R201 45	SD-WE/R

FX2 Differential Termination
Not Loaded

FX2-IO17	R202 100	FX2-IO18
FX2-IO19	R203 100	FX2-IO20
FX2-IO21	R204 100	FX2-IO22
FX2-IO23	R205 100	FX2-IO24
FX2-IO25	R206 100	FX2-IO26
FX2-IO27	R207 100	FX2-IO28
FX2-IO35	R208 100	FX2-IO36
FX2-IO37	R209 100	FX2-IO38
FX2-CLKIN	R210 100	FX2-CLKOUT

Spartan 3E Starter Board Digilent Inc. Copyright 2005, 2006		Engineer: CC
SHEET: DDR Memory Signals		Author: GMA
TITLE: S3E Starter		Rev: D
Doc#: 500-087	Date: 02/02/06	Sheet:14/14