UBX-M9140-KB

u-blox M9 standard precision GNSS chip

Interface description

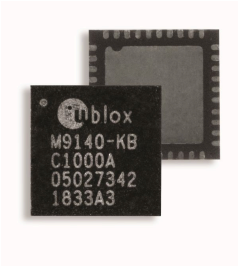

Abstract
This document describes the interface (version 32.00) of the u-blox UBX-M9140-KB GNSS chip. The UBX-M9140-KB GNSS chip offers ultra-robust meter-level GNSS positioning performance with concurrent reception of up to four GNSS signals (GPS, GLONASS, BeiDou, Galileo).

www.u-blox.com

UBX-19039383 - R01

Document information

Title	**UBX-M9140-KB**	
Subtitle	u-blox M9 standard precision GNSS chip	
Document type	Interface description	
Document number	UBX-19039383	
Revision and date	R01	12-Dec-2019
Document status	Advance information – confidential	

This document applies to the following products:

Product name	Type number	Firmware version	PCN reference
UBX-M9140-KB	UBX-M9140-KB-C1000A	SPG 4.00	N/A

CONFIDENTIAL

u-blox reserves all rights to this document and the information contained herein. Products, names, logos and designs described herein may in whole or in part be subject to intellectual property rights. Reproduction, use, modification or disclosure to third parties of this document or any part thereof without the express permission of u-blox is strictly prohibited.

The information contained herein is provided "as is" and u-blox assumes no liability for the use of the information. No warranty, either express or implied, is given with respect to, including but not limited to, the accuracy, correctness, reliability and fitness for a particular purpose of the information. This document may be revised by u-blox at any time. For most recent documents, please visit www.u blox.com.

Copyright © 2019, u-blox AG.

u-blox is a registered trademark of u-blox Holding AG in the EU and other countries.

Contents

1 General information....13
1.1 Document overview....13
1.2 Firmware and protocol versions....13
1.3 Receiver configuration....14
1.4 Naming....15
1.5 GNSS, satellite and signal identifiers....15
1.5.1 Overview....15
1.5.2 GNSS identifiers....16
1.5.3 Satellite identifiers....16
1.5.4 Signal identifiers....17
1.6 Message types....17
2 NMEA protocol....19
2.1 NMEA frame structure....19
2.2 NMEA protocol configuration....19
2.3 NMEA-proprietary messages....20
2.4 NMEA multi-GNSS operation....21
2.5 NMEA data fields....21
2.5.1 NMEA Talker ID....21
2.5.2 NMEA extra fields....21
2.5.3 NMEA latitude and longitude format....22
2.5.4 NMEA GNSS, satellite and signal numbering....22
2.5.5 NMEA position fix flags....22
2.5.6 NMEA output of invalid or unknown data....23
2.6 NMEA messages overview....23
2.7 Standard messages....24
2.7.1 DTM....24
2.7.1.1 Datum reference....24
2.7.2 GAQ....25
2.7.2.1 Poll a standard message (Talker ID GA)....25
2.7.3 GBQ....25
2.7.3.1 Poll a standard message (Talker GB)....25
2.7.4 GBS....26
2.7.4.1 GNSS satellite fault detection....26
2.7.5 GGA....27
2.7.5.1 Global positioning system fix data....27
2.7.6 GLL....27
2.7.6.1 Latitude and longitude, with time of position fix and status....28
2.7.7 GLQ....28
2.7.7.1 Poll a standard message (Talker ID GL)....28
2.7.8 GNQ....28
2.7.8.1 Poll a standard message (Talker ID GN)....29
2.7.9 GNS....29
2.7.9.1 GNSS fix data....29
2.7.10 GPQ....30
2.7.10.1 Poll a standard message (Talker ID GP)....30

CONFIDENTIAL

2.7.11 GRS ... 30
2.7.11.1 GNSS range residuals ... 30
2.7.12 GSA ... 31
2.7.12.1 GNSS DOP and active satellites ... 31
2.7.13 GST ... 32
2.7.13.1 GNSS pseudorange error statistics ... 32
2.7.14 GSV ... 32
2.7.14.1 GNSS satellites in view ... 32
2.7.15 RLM ... 33
2.7.15.1 Return link message (RLM) ... 33
2.7.16 RMC ... 34
2.7.16.1 Recommended minimum data ... 34
2.7.17 TXT ... 35
2.7.17.1 Text transmission ... 35
2.7.18 VLW ... 35
2.7.18.1 Dual ground/water distance ... 35
2.7.19 VTG ... 36
2.7.19.1 Course over ground and ground speed ... 36
2.7.20 ZDA ... 37
2.7.20.1 Time and date ... 37
2.8 PUBX messages ... 37
2.8.1 CONFIG (PUBX,41) ... 37
2.8.1.1 Set protocols and baud rate ... 37
2.8.2 POSITION (PUBX,00) ... 38
2.8.2.1 Poll a PUBX,00 message ... 38
2.8.2.2 Lat/Long position data ... 38
2.8.3 RATE (PUBX,40) ... 39
2.8.3.1 Set NMEA message output rate ... 39
2.8.4 SVSTATUS (PUBX,03) ... 40
2.8.4.1 Poll a PUBX,03 message ... 40
2.8.4.2 Satellite status ... 41
2.8.5 TIME (PUBX,04) ... 41
2.8.5.1 Poll a PUBX,04 message ... 41
2.8.5.2 Time of day and clock information ... 42

3 UBX protocol ... 43
3.1 UBX protocol key features ... 43
3.2 UBX frame structure ... 43
3.3 UBX payload definition rules ... 44
3.3.1 UBX structure packing ... 44
3.3.2 UBX reserved elements ... 44
3.3.3 UBX undefined values ... 44
3.3.4 UBX conditional values ... 44
3.3.5 UBX data types ... 44
3.3.6 UBX fields scale and unit ... 45
3.3.7 UBX repeated fields ... 45
3.3.8 UBX payload decoding ... 45
3.4 UBX checksum ... 46
3.5 UBX message flow ... 46
3.5.1 UBX acknowledgement ... 46
3.5.2 UBX polling mechanism ... 46

CONFIDENTIAL

3.6 GNSS, satellite and signal numbering ... 46
3.7 UBX message example ... 47
3.8 UBX messages overview ... 48
3.9 UBX-ACK (0x05) ... 52
3.9.1 UBX-ACK-ACK (0x05 0x01) ... 52
3.9.1.1 Message acknowledged ... 52
3.9.2 UBX-ACK-NAK (0x05 0x00) ... 52
3.9.2.1 Message not acknowledged ... 53
3.10 UBX-CFG (0x06) ... 53
3.10.1 UBX-CFG-ANT (0x06 0x13) ... 53
3.10.1.1 Antenna control settings ... 53
3.10.2 UBX-CFG-BATCH (0x06 0x93) ... 54
3.10.2.1 Get/set data batching configuration ... 54
3.10.3 UBX-CFG-CFG (0x06 0x09) ... 54
3.10.3.1 Clear, save and load configurations ... 55
3.10.4 UBX-CFG-DAT (0x06 0x06) ... 55
3.10.4.1 Set user-defined datum ... 55
3.10.4.2 The currently defined datum ... 56
3.10.5 UBX-CFG-GEOFENCE (0x06 0x69) ... 57
3.10.5.1 Geofencing configuration ... 57
3.10.6 UBX-CFG-GNSS (0x06 0x3e) ... 58
3.10.6.1 GNSS system configuration ... 58
3.10.7 UBX-CFG-INF (0x06 0x02) ... 59
3.10.7.1 Poll configuration for one protocol ... 59
3.10.7.2 Information message configuration ... 60
3.10.8 UBX-CFG-ITFM (0x06 0x39) ... 60
3.10.8.1 Jamming/interference monitor configuration ... 60
3.10.9 UBX-CFG-LOGFILTER (0x06 0x47) ... 61
3.10.9.1 Data logger configuration ... 61
3.10.10 UBX-CFG-MSG (0x06 0x01) ... 62
3.10.10.1 Poll a message configuration ... 62
3.10.10.2 Set message rate(s) ... 62
3.10.10.3 Set message rate ... 63
3.10.11 UBX-CFG-NAV5 (0x06 0x24) ... 63
3.10.11.1 Navigation engine settings ... 63
3.10.12 UBX-CFG-NAVX5 (0x06 0x23) ... 65
3.10.12.1 Navigation engine expert settings ... 65
3.10.13 UBX-CFG-NMEA (0x06 0x17) ... 66
3.10.13.1 Extended NMEA protocol configuration V1 ... 66
3.10.14 UBX-CFG-ODO (0x06 0x1e) ... 68
3.10.14.1 Odometer, low-speed COG engine settings ... 68
3.10.15 UBX-CFG-OTP (0x06 0x41) ... 69
3.10.15.1 Poll eFuse OTP content ... 69
3.10.15.2 eFuse OTP content ... 69
3.10.15.3 Write eFuse OTP content ... 69
3.10.15.4 Write file 0x20: USB vendor ID ... 70
3.10.15.5 Write file 0x21: USB vendor string ... 70
3.10.15.6 Write file 0x22: USB product ID ... 70
3.10.15.7 Write file 0x23: USB product string ... 71
3.10.15.8 Write file 0x30: receiver configuration ... 71

CONFIDENTIAL

3.10.15.9 Write file 0x36: oscillator offset calibration....71
3.10.15.10 Write file 0xa6: host interface signature config....72
3.10.16 UBX-CFG-PIO (0x06 0x2c)....72
3.10.16.1 Set PIO pins....72
3.10.17 UBX-CFG-PM2 (0x06 0x3b)....73
3.10.17.1 Extended power management configuration....73
3.10.18 UBX-CFG-PMS (0x06 0x86)....75
3.10.18.1 Power mode setup....75
3.10.19 UBX-CFG-PRT (0x06 0x00)....75
3.10.19.1 Polls the configuration for one I/O port....75
3.10.19.2 Port configuration for UART ports....76
3.10.19.3 Port configuration for USB port....77
3.10.19.4 Port configuration for SPI port....78
3.10.19.5 Port configuration for I2C (DDC) port....80
3.10.20 UBX-CFG-PT2 (0x06 0x59)....81
3.10.20.1 Production test configuration....81
3.10.21 UBX-CFG-PWR (0x06 0x57)....82
3.10.21.1 Put receiver in a defined power state....82
3.10.22 UBX-CFG-RATE (0x06 0x08)....82
3.10.22.1 Navigation/measurement rate settings....82
3.10.23 UBX-CFG-RINV (0x06 0x34)....83
3.10.23.1 Contents of remote inventory....83
3.10.24 UBX-CFG-RST (0x06 0x04)....84
3.10.24.1 Reset receiver / clear backup data structures....84
3.10.25 UBX-CFG-RXM (0x06 0x11)....84
3.10.25.1 RXM configuration....85
3.10.26 UBX-CFG-SBAS (0x06 0x16)....85
3.10.26.1 SBAS configuration....85
3.10.27 UBX-CFG-TP5 (0x06 0x31)....87
3.10.27.1 Time pulse parameters....87
3.10.28 UBX-CFG-USB (0x06 0x1b)....88
3.10.28.1 USB configuration....88
3.10.29 UBX-CFG-USBTEST (0x06 0x58)....89
3.10.29.1 USB testing....89
3.10.30 UBX-CFG-VALDEL (0x06 0x8c)....89
3.10.30.1 Delete configuration item values....90
3.10.30.2 Delete configuration item values (with transaction)....90
3.10.31 UBX-CFG-VALGET (0x06 0x8b)....91
3.10.31.1 Get configuration items....91
3.10.31.2 Configuration items....92
3.10.32 UBX-CFG-VALSET (0x06 0x8a)....93
3.10.32.1 Set configuration item values....93
3.10.32.2 Set configuration item values (with transaction)....94
3.11 UBX-INF (0x04)....95
3.11.1 UBX-INF-DEBUG (0x04 0x04)....95
3.11.1.1 ASCII output with debug contents....95
3.11.2 UBX-INF-ERROR (0x04 0x00)....95
3.11.2.1 ASCII output with error contents....95
3.11.3 UBX-INF-NOTICE (0x04 0x02)....96
3.11.3.1 ASCII output with informational contents....96

CONFIDENTIAL

3.11.4 UBX-INF-TEST (0x04 0x03)....96
3.11.4.1 ASCII output with test contents....96
3.11.5 UBX-INF-WARNING (0x04 0x01)....96
3.11.5.1 ASCII output with warning contents....96
3.12 UBX-LOG (0x21)....97
3.12.1 UBX-LOG-BATCH (0x21 0x11)....97
3.12.1.1 Batched data....97
3.12.2 UBX-LOG-CREATE (0x21 0x07)....99
3.12.2.1 Create log file....99
3.12.3 UBX-LOG-ERASE (0x21 0x03)....99
3.12.3.1 Erase logged data....100
3.12.4 UBX-LOG-FINDTIME (0x21 0x0e)....100
3.12.4.1 Find index of a log entry based on a given time....100
3.12.4.2 Response to FINDTIME request....100
3.12.5 UBX-LOG-INFO (0x21 0x08)....101
3.12.5.1 Poll for log information....101
3.12.5.2 Log information....101
3.12.6 UBX-LOG-RETRIEVE (0x21 0x09)....102
3.12.6.1 Request log data....102
3.12.7 UBX-LOG-RETRIEVEBATCH (0x21 0x10)....103
3.12.7.1 Request batch data....103
3.12.8 UBX-LOG-RETRIEVEPOS (0x21 0x0b)....103
3.12.8.1 Position fix log entry....103
3.12.9 UBX-LOG-RETRIEVEPOSEXTRA (0x21 0x0f)....104
3.12.9.1 Odometer log entry....104
3.12.10 UBX-LOG-RETRIEVESTRING (0x21 0x0d)....104
3.12.10.1 Byte string log entry....105
3.12.11 UBX-LOG-STRING (0x21 0x04)....105
3.12.11.1 Store arbitrary string in on-board flash....105
3.13 UBX-MGA (0x13)....106
3.13.1 UBX-MGA-ACK (0x13 0x60)....106
3.13.1.1 Multiple GNSS acknowledge message....106
3.13.2 UBX-MGA-ANO (0x13 0x20)....106
3.13.2.1 Multiple GNSS AssistNow Offline assistance....106
3.13.3 UBX-MGA-BDS (0x13 0x03)....107
3.13.3.1 BDS ephemeris assistance....107
3.13.3.2 BDS almanac assistance....108
3.13.3.3 BDS health assistance....109
3.13.3.4 BDS UTC assistance....109
3.13.3.5 BDS ionosphere assistance....110
3.13.4 UBX-MGA-DBD (0x13 0x80)....110
3.13.4.1 Poll the navigation database....110
3.13.4.2 Navigation database dump entry....111
3.13.5 UBX-MGA-GAL (0x13 0x02)....111
3.13.5.1 Galileo ephemeris assistance....111
3.13.5.2 Galileo almanac assistance....112
3.13.5.3 Galileo GPS time offset assistance....113
3.13.5.4 Galileo UTC assistance....114
3.13.6 UBX-MGA-GLO (0x13 0x06)....114
3.13.6.1 GLONASS ephemeris assistance....114

CONFIDENTIAL

3.13.6.2 GLONASS almanac assistance ... 115
3.13.6.3 GLONASS auxiliary time offset assistance ... 116
3.13.7 UBX-MGA-GPS (0x13 0x00) ... 116
3.13.7.1 GPS ephemeris assistance ... 116
3.13.7.2 GPS almanac assistance ... 118
3.13.7.3 GPS health assistance ... 118
3.13.7.4 GPS UTC assistance ... 119
3.13.7.5 GPS ionosphere assistance ... 119
3.13.8 UBX-MGA-INI (0x13 0x40) ... 120
3.13.8.1 Initial position assistance ... 120
3.13.8.2 Initial position assistance ... 120
3.13.8.3 Initial time assistance ... 121
3.13.8.4 Initial time assistance ... 122
3.13.8.5 Initial clock drift assistance ... 123
3.13.8.6 Initial frequency assistance ... 123
3.13.8.7 Earth orientation parameters assistance ... 123
3.13.9 UBX-MGA-QZSS (0x13 0x05) ... 124
3.13.9.1 QZSS ephemeris assistance ... 124
3.13.9.2 QZSS almanac assistance ... 125
3.13.9.3 QZSS health assistance ... 126
3.14 UBX-MON (0x0a) ... 126
3.14.1 UBX-MON-COMMS (0x0a 0x36) ... 126
3.14.1.1 Comm port information ... 126
3.14.2 UBX-MON-GNSS (0x0a 0x28) ... 127
3.14.2.1 Information message major GNSS selection ... 127
3.14.3 UBX-MON-HW (0x0a 0x09) ... 128
3.14.3.1 Hardware status ... 128
3.14.4 UBX-MON-HW2 (0x0a 0x0b) ... 129
3.14.4.1 Extended hardware status ... 129
3.14.5 UBX-MON-HW3 (0x0a 0x37) ... 130
3.14.5.1 I/O pin status ... 130
3.14.6 UBX-MON-IO (0x0a 0x02) ... 131
3.14.6.1 I/O system status ... 131
3.14.7 UBX-MON-MSGPP (0x0a 0x06) ... 131
3.14.7.1 Message parse and process status ... 131
3.14.8 UBX-MON-PATCH (0x0a 0x27) ... 132
3.14.8.1 Installed patches ... 132
3.14.9 UBX-MON-PIO (0x0a 0x24) ... 132
3.14.9.1 Production testing message for PIO pins ... 132
3.14.10 UBX-MON-PT2 (0x0a 0x2b) ... 133
3.14.10.1 Multi-GNSS production test monitor ... 133
3.14.11 UBX-MON-RF (0x0a 0x38) ... 134
3.14.11.1 RF information ... 135
3.14.12 UBX-MON-RXBUF (0x0a 0x07) ... 135
3.14.12.1 Receiver buffer status ... 136
3.14.13 UBX-MON-RXR (0x0a 0x21) ... 136
3.14.13.1 Receiver status information ... 136
3.14.14 UBX-MON-SPAN (0x0a 0x31) ... 136
3.14.14.1 Signal characteristics ... 136
3.14.15 UBX-MON-TEMP (0x0a 0x0e) ... 137

CONFIDENTIAL

3.14.15.1 Poll temperature value and state ... 137
3.14.15.2 Temperature value and state ... 137
3.14.16 UBX-MON-TXBUF (0x0a 0x08) ... 137
3.14.16.1 Transmitter buffer status ... 138
3.14.17 UBX-MON-VER (0x0a 0x04) ... 138
3.14.17.1 Receiver and software version ... 138
3.15 UBX-NAV (0x01) ... 139
3.15.1 UBX-NAV-CLOCK (0x01 0x22) ... 139
3.15.1.1 Clock solution ... 139
3.15.2 UBX-NAV-COV (0x01 0x36) ... 139
3.15.2.1 Covariance matrices ... 139
3.15.3 UBX-NAV-DOP (0x01 0x04) ... 140
3.15.3.1 Dilution of precision ... 140
3.15.4 UBX-NAV-EOE (0x01 0x61) ... 141
3.15.4.1 End of epoch ... 141
3.15.5 UBX-NAV-GEOFENCE (0x01 0x39) ... 141
3.15.5.1 Geofencing status ... 141
3.15.6 UBX-NAV-HPPOSECEF (0x01 0x13) ... 142
3.15.6.1 High precision position solution in ECEF ... 142
3.15.7 UBX-NAV-HPPOSLLH (0x01 0x14) ... 142
3.15.7.1 High precision geodetic position solution ... 142
3.15.8 UBX-NAV-ODO (0x01 0x09) ... 143
3.15.8.1 Odometer solution ... 143
3.15.9 UBX-NAV-ORB (0x01 0x34) ... 144
3.15.9.1 GNSS orbit database info ... 144
3.15.10 UBX-NAV-POSECEF (0x01 0x01) ... 145
3.15.10.1 Position solution in ECEF ... 145
3.15.11 UBX-NAV-POSLLH (0x01 0x02) ... 146
3.15.11.1 Geodetic position solution ... 146
3.15.12 UBX-NAV-PVT (0x01 0x07) ... 146
3.15.12.1 Navigation position velocity time solution ... 146
3.15.13 UBX-NAV-RESETODO (0x01 0x10) ... 148
3.15.13.1 Reset odometer ... 148
3.15.14 UBX-NAV-SAT (0x01 0x35) ... 148
3.15.14.1 Satellite information ... 148
3.15.15 UBX-NAV-SIG (0x01 0x43) ... 150
3.15.15.1 Signal information ... 150
3.15.16 UBX-NAV-STATUS (0x01 0x03) ... 151
3.15.16.1 Receiver navigation status ... 151
3.15.17 UBX-NAV-TIMEBDS (0x01 0x24) ... 153
3.15.17.1 BeiDou time solution ... 153
3.15.18 UBX-NAV-TIMEGAL (0x01 0x25) ... 153
3.15.18.1 Galileo time solution ... 153
3.15.19 UBX-NAV-TIMEGLO (0x01 0x23) ... 154
3.15.19.1 GLONASS time solution ... 154
3.15.20 UBX-NAV-TIMEGPS (0x01 0x20) ... 155
3.15.20.1 GPS time solution ... 155
3.15.21 UBX-NAV-TIMELS (0x01 0x26) ... 155
3.15.21.1 Leap second event information ... 155
3.15.22 UBX-NAV-TIMEQZSS (0x01 0x27) ... 157

CONFIDENTIAL

3.15.22.1 QZSS time solution ... 157
3.15.23 UBX-NAV-TIMEUTC (0x01 0x21) ... 157
3.15.23.1 UTC time solution ... 157
3.15.24 UBX-NAV-VELECEF (0x01 0x11) ... 158
3.15.24.1 Velocity solution in ECEF ... 158
3.15.25 UBX-NAV-VELNED (0x01 0x12) ... 159
3.15.25.1 Velocity solution in NED frame ... 159
3.16 UBX-RXM (0x02) ... 159
3.16.1 UBX-RXM-MEASX (0x02 0x14) ... 159
3.16.1.1 Satellite measurements for RRLP ... 159
3.16.2 UBX-RXM-PMREQ (0x02 0x41) ... 160
3.16.2.1 Power management request ... 161
3.16.2.2 Power management request ... 161
3.16.3 UBX-RXM-RLM (0x02 0x59) ... 161
3.16.3.1 Galileo SAR short-RLM report ... 162
3.16.3.2 Galileo SAR long-RLM report ... 162
3.16.4 UBX-RXM-RTC5 (0x02 0x23) ... 162
3.16.4.1 Real time clock status ... 163
3.16.5 UBX-RXM-SFRBX (0x02 0x13) ... 163
3.16.5.1 Broadcast navigation data subframe ... 163
3.17 UBX-SEC (0x27) ... 164
3.17.1 UBX-SEC-ECSIGN (0x27 0x04) ... 164
3.17.1.1 Signature for output message ... 164
3.17.2 UBX-SEC-UNIQID (0x27 0x03) ... 164
3.17.2.1 Unique chip ID ... 164
3.17.3 UBX-SEC-SESSID (0x27 0x05) ... 164
3.17.3.1 Session ID used for ECSIGN ... 164
3.18 UBX-TIM (0x0d) ... 165
3.18.1 UBX-TIM-TM2 (0x0d 0x03) ... 165
3.18.1.1 Time mark data ... 165
3.18.2 UBX-TIM-TP (0x0d 0x01) ... 166
3.18.2.1 Time pulse time data ... 166
3.18.3 UBX-TIM-VRFY (0x0d 0x06) ... 167
3.18.3.1 Sourced time verification ... 167
3.19 UBX-UPD (0x09) ... 168
3.19.1 UBX-UPD-CERASE (0x09 0x16) ... 168
3.19.1.1 Chip erase the connected SQI flash ... 168
3.19.1.2 Chip erase the connected SQI flash ... 168
3.19.2 UBX-UPD-CRC (0x09 0x0d) ... 168
3.19.2.1 Check CRC of binary ... 168
3.19.3 UBX-UPD-ERASE (0x09 0x0b) ... 169
3.19.3.1 Erase flash sector ... 169
3.19.3.2 Erase flash sector ... 169
3.19.4 UBX-UPD-FLDET (0x09 0x08) ... 169
3.19.4.1 Get the flash manufacturer and device IDs ... 169
3.19.4.2 Get the flash manufacturer and device IDs ... 170
3.19.5 UBX-UPD-FLWRI (0x09 0x0c) ... 170
3.19.5.1 Write flash data (area must be erased before) ... 170
3.19.5.2 Write flash data success indication ... 170
3.19.6 UBX-UPD-IDEN (0x09 0x06) ... 171

CONFIDENTIAL

3.19.6.1 Identify flash loader version....171
3.19.6.2 Identify flash loader version....171
3.19.7 UBX-UPD-IMG (0x09 0x1a)....171
3.19.7.1 Write external image....171
3.19.8 UBX-UPD-POS (0x09 0x15)....171
3.19.8.1 Enable PLL during safeboot....172
3.19.9 UBX-UPD-QSIZE (0x09 0x09)....172
3.19.9.1 Get number of pending commands in queue....172
3.19.9.2 Number of pending commands in queue....172
3.19.10 UBX-UPD-RBOOT (0x09 0x0e)....172
3.19.10.1 Perform a watchdog reset....172
3.19.11 UBX-UPD-ROM (0x09 0x25)....173
3.19.11.1 ROM CRC....173
3.19.12 UBX-UPD-SAFE (0x09 0x07)....173
3.19.12.1 Boot in safe environment from ROM or RAM....173
3.19.12.2 Start flash loader task....173
3.19.13 UBX-UPD-SETQ (0x09 0x0f)....174
3.19.13.1 Set maximum of pending commands in queue....174
3.19.13.2 Set maximum of pending commands in queue....174
3.19.14 UBX-UPD-SOS (0x09 0x14)....174
3.19.14.1 Poll backup restore status....174
3.19.14.2 Create backup in flash....174
3.19.14.3 Clear backup in flash....175
3.19.14.4 Backup creation acknowledge....175
3.19.14.5 System restored from backup....175

4 Configuration interface....177

4.1 Configuration database....177
4.2 Configuration items....177
4.3 Configuration layers....178
4.3.1 Default layer composite....179
4.4 Configuration interface access....180
4.4.1 UBX protocol interface....180
4.4.2 Pin layer configuration....180
4.4.3 OTP layer configuration....180
4.5 Configuration data....181
4.6 Configuration transactions....181
4.7 Configuration reset behavior....182
4.8 Configuration overview....183
4.9 Configuration reference....184
4.9.1 CFG-ANA: AssistNow Autonomous and Offline configuration....184
4.9.2 CFG-BATCH: Batched output configuration....184
4.9.3 CFG-CLOCK: System clock configuration....184
4.9.4 CFG-GEOFENCE: Geofencing configuration....184
4.9.5 CFG-HW: Hardware configuration....186
4.9.6 CFG-I2C: Configuration of the I2C interface....187
4.9.7 CFG-I2CINPROT: Input protocol configuration of the I2C interface....187
4.9.8 CFG-I2COUTPROT: Output protocol configuration of the I2C interface....187
4.9.9 CFG-INFMSG: Information message configuration....187
4.9.10 CFG-ITFM: Jamming and interference monitor configuration....188
4.9.11 CFG-LOGFILTER: Data logger configuration....189

CONFIDENTIAL

4.9.12 CFG-MOT: Motion detector configuration....190
4.9.13 CFG-MSGOUT: Message output configuration....190
4.9.14 CFG-NAVSPG: Standard precision navigation configuration....203
4.9.15 CFG-NMEA: NMEA protocol configuration....207
4.9.16 CFG-ODO: Odometer and low-speed course over ground filter configuration....209
4.9.17 CFG-PM: Configuration for receiver power management....210
4.9.18 CFG-QZSS: QZSS system configuration....211
4.9.19 CFG-RATE: Navigation and measurement rate configuration....211
4.9.20 CFG-RINV: Remote inventory....212
4.9.21 CFG-SBAS: SBAS configuration....212
4.9.22 CFG-SEC: Security configuration....214
4.9.23 CFG-SIGNAL: Satellite systems (GNSS) signal configuration....214
4.9.24 CFG-SPI: Configuration of the SPI interface....214
4.9.25 CFG-SPIINPROT: Input protocol configuration of the SPI interface....215
4.9.26 CFG-SPIOUTPROT: Output protocol configuration of the SPI interface....215
4.9.27 CFG-TP: Timepulse configuration....215
4.9.28 CFG-TXREADY: TX ready configuration....218
4.9.29 CFG-UART1: Configuration of the UART1 interface....218
4.9.30 CFG-UART1INPROT: Input protocol configuration of the UART1 interface....219
4.9.31 CFG-UART1OUTPROT: Output protocol configuration of the UART1 interface....219
4.9.32 CFG-UART2: Configuration of the UART2 interface....220
4.9.33 CFG-UART2INPROT: Input protocol configuration of the UART2 interface....220
4.9.34 CFG-UART2OUTPROT: Output protocol configuration of the UART2 interface....221
4.9.35 CFG-USB: Configuration of the USB interface....221
4.9.36 CFG-USBINPROT: Input protocol configuration of the USB interface....221
4.9.37 CFG-USBOUTPROT: Output protocol configuration of the USB interface....222
4.10 Legacy UBX message fields reference....222

Configuration defaults....229

Related documents....247

Revision history....248

1 General information

1.1 Document overview

This document describes the interface of the UBX-M9140-KB. The interface to u-blox positioning receivers consists of the following parts:

- NMEA protocol
- UBX protocol

See also Related documents.

☞ This document describes features that are common to many different u-blox GNSS and correction data receivers. Some of these features may not be available in UBX-M9140-KB, and some may require specific configurations to be enabled. See the Data sheet of your specific product for availability and the Integration manual for instructions for enabling the features.

☞ Previous versions of u-blox receiver documentation combined general receiver description and interface specification. In the current documentation the receiver description is included in the Integration manual.

1.2 Firmware and protocol versions

u-blox receivers execute firmware from internal ROM and from internal code-RAM. The firmware image is loaded into the code-RAM by a boot loader executed from ROM. The boot loader loads the firmware into the code-RAM either from a connected flash memory or from the host processor.

The location and the version of the boot loader and the currently running firmware can be found in the boot screen and in the UBX-MON-VER message. If the firmware has been loaded from a connected flash or from the host processor, it is indicated by text "EXT". When the receiver is started, the boot screen is output automatically in UBX-INF-NOTICE or NMEA-Standard-TXT messages if configured using CFG-INFMSG. The UBX-MON-VER message can be polled using the UBX polling mechanism.

The following u-center screenshots show an example of a u-blox receiver running firmware loaded from flash:

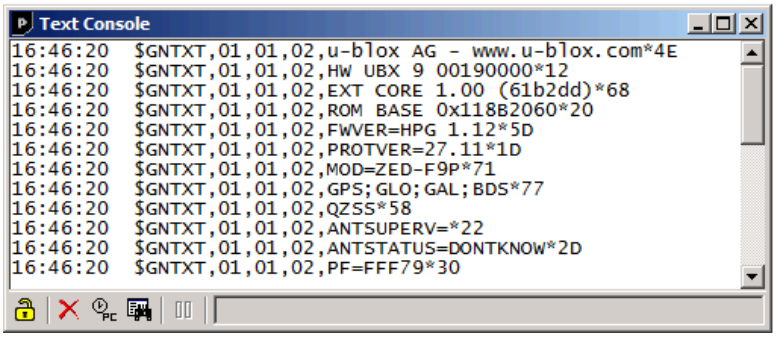

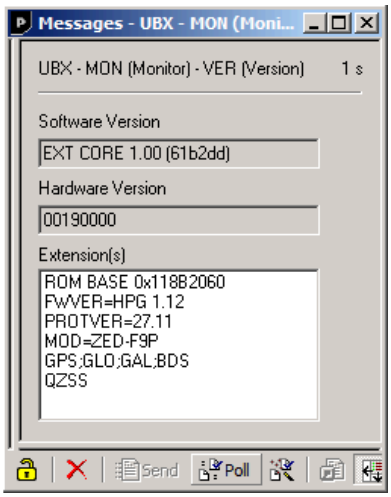

CONFIDENTIAL

The following information is available (✓) from the boot screen (**B**) and the UBX-MON-VER message (**M**):

B	M	Example	Information
✓		`u-blox AG - www.u-blox.com`	Start of the boot screen.
✓		`HW UBX 9 00190000`	Hardware version of the u-blox receiver.
	✓	`00190000`	
✓	✓	`EXT CORE 1.00 (61b2dd)`	Base (CORE) firmware version and revision number, loaded from external memory (EXT).
		`EXT LAP 1.00 (12a3bc)`	Product firmware version and revision number, loaded from external memory (EXT). Available only in some firmware versions. See below for a list of product acronyms.
✓	✓	`ROM BASE 0x118B2060`	Revision number of the underlying boot loader firmware in ROM.
✓	✓	`FWVER=HPG 1.12`	Product firmware version number, where: • `SPG` = Standard precision GNSS product • `HPG` = High precision GNSS product • `ADR` = Dead reckoning product • `TIM` = Time sync product • `LAP` = Lane accurate positioning product
✓	✓	`PROTVER=27.11`	Supported protocol version.
✓	✓	`MOD=ZED-F9P`	Module name (if available).
✓	✓	`GPS;GLO;GAL;BDS`	List of supported major GNSS (see GNSS identifiers).
✓	✓	`SBAS;QZSS`	List of supported augmentation systems (see GNSS identifiers).
✓		`ANTSUPERV=AC SD PDoS SR`	Configuration of the antenna supervisor (if available), where: • `AC` = Active antenna control enabled • `SD` = Short circuit detection enabled • `OD` = Open circuit detection enabled • `PDoS` = Short circuit power down logic enabled • `SR` = Automatic recovery from short state enabled
✓		`PF=FFF79`	Product configuration.

☞ The "FWVER" product firmware version indicates which firmware is currently running. This is referred to as "firmware version" in this and other documents.

☞ The revision numbers should only be used to identify a known firmware version. They are not necessarily numeric nor are they guaranteed to increase with newer firmware versions.

☞ Similarly, firmware version numbers can have additional non-numeric information appended, such as in "1.00B03".

☞ Not every entry is output by all u-blox receivers. The availability of some information depends on the product, the firmware location and the firmware version.

The product firmware version and the base firmware version relate to the protocol version:

Product firmware version	Base firmware version	Protocol version
SPG 4.00	EXT CORE 4.00 (b41d34)	32.00

1.3 Receiver configuration

u-blox positioning receivers are fully configurable with UBX protocol messages. The configuration used by the receiver during normal operation is called the "current configuration". The current configuration can be changed during normal operation by sending UBX-CFG-VALSET messages

CONFIDENTIAL

over any I/O port . The receiver will change its current configuration immediately after receiving a configuration message. The receiver will always use the current configuration only.

The current configuration is loaded from permanent configuration hard-coded in the receiver firmware (the defaults) and from non-volatile memory (user configuration) on startup of the receiver. Changes made to the current configuration at run-time will be lost when there is a power cycle, a hardware reset or a (complete) controlled software reset (see Configuration reset behavior).

See Configuration interface for a detailed description of the receiver configuration system, the explanation of the configuration concept and its principles and interfaces.

☞ The configuration interface has changed from earlier u-blox positioning receivers. There is some backwards compatibility provided in UBX-CFG configuration messages. Users are strongly advised to only use the Configuration interface. See also Legacy UBX message fields reference.

☞ See the Integration manual for a basic receiver configuration most commonly used.

1.4 Naming

Message names are written in full with the parts of the name separated by hyphens ("-"). The full message name consists of the protocol name (i.e., *UBX)*, the class name (e.g. *NAV*) and the message name (e.g. *PVT*). For example the receiver software version information message is referred to as *UBX-MON-VER*. Similarly, the *NMEA-Standard-GGA* is the NMEA standard message (sentence) with the global positioning fix data.

References to fields of the message add the field name separated by a dot ("."), e.g. *UBX-MON-VER.swVersion*.

Some messages use a fourth level of naming, called the message version. One example is the *UBX-MGA-GPS* message for GPS assistance data, which exists in versions for ephemerides (*UBX-MGA-GPS-EPH*) and almanacs (*UBX-MGA-GPS-ALM*).

Names of configuration items are of the form *CFG-GROUP-ITEM*. For example, *CFG-NAVSPG-DYNMODEL* refers to the navigation dynamic platform model the receiver uses. Constants add a fourth level to the item name, such as *CFG-NAVSPG-DYNMODEL-AUTOMOT* for the automotive platform model. In the context of describing an item's value, only the last part of the constant name can be used (e.g. "set *CFG-NAVSPG-DYNMODEL* to *PORT* for portable applications").

1.5 GNSS, satellite and signal identifiers

1.5.1 Overview

The UBX protocol messages use two different numbering schemes. Some messages use a one-byte (type U1) field for the satellite identifier (normally named `svid`). This uses numbering similar to the "extended" NMEA scheme and is merely an extension of the scheme in use for previous generations of u-blox receivers.

With the ever increasing numbers of GNSS satellites, this scheme has been phased out in recent u-blox positioning receivers (as numbers greater than 255 would have become necessary). Consequently, newer messages use a more sophisticated, flexible and future-proof approach. This involves having a separate `gnssId` field to identify which GNSS the satellite is part of and a simple `svId` (SV for space vehicle) field that indicates which number the satellite is in that system. In nearly all cases, this means that the *svId* is the natural number associated with the satellite. For example the GLONASS SV4 is identified as *gnssId 6, svId 4*, while the GPS SV4 is *gnssId 0, svId 4*.

CONFIDENTIAL

Signal identifiers are used where different signals from a GNSS satellite need to be distinguished (e.g. in the UBX-NAV-SIG message). A separate `sigId` field is used. These identifiers are only valid when combined with a GNSS identifier (`gnssId` field).

The NMEA protocol (version 4.10) identifies GNSS satellites with a one-digit system ID and a two-digit satellite number. u-blox receivers support this method in their NMEA output when "strict" SV numbering is selected. In most cases this is the default setting, but it can be checked or changed using the Configuration interface (see also NMEA GNSS, satellite and signal numbering).

In order to support newer GNSS, such as QZSS or Galileo, within current receivers, the "extended" SV numbering scheme can be enabled. This uses the NMEA-defined numbers where possible, but adds other number ranges to support other GNSS. Note however that these non-standard extensions require 3-digit numbers, which may not be supported by some NMEA parsing software. For example QZSS satellites are reported using numbers in the range of 193 to 197.

The NMEA standard defines signal identifiers to distinguish different signals sent by a single GNSS satellite. (e.g. L2 CL and CM). u-blox positioning receivers use those identifiers for signal identification, as far as the corresponding standard is supported in a particular product.

☞ Note that the following sections are a generic overview for different u-blox positioning receivers. A particular product may not support all of the described GNSS identifiers, satellite numbers, signal identifiers or combinations thereof.

1.5.2 GNSS identifiers

The following table lists each GNSS along with the GNSS identifiers (UBX protocol), the system IDs (NMEA protocol), and abbreviations used in this document:

GNSS	Abbreviations		UBX gnssId	NMEA system ID (2.3+)	NMEA system ID (4.10+)
GPS	GPS	G	0	1	1
SBAS	SBAS	S	1	1	1
Galileo	GAL	E	2	n/a	3
BeiDou	BDS	B	3	n/a	(4)[1]
IMES	IMES	I	4	n/a	n/a
QZSS	QZSS	Q	5	n/a	n/a
GLONASS	GLO	R	6	2	2

Other values will be added when support for other GNSS types will be enabled in u-blox receivers.

See also NMEA Talker ID.

1.5.3 Satellite identifiers

A summary of all the satellite numbering schemes used in the NMEA protocol and the UBX protocol is provided in the following table.

		UBX Protocol		NMEA Protocol 2.x–4.0		NMEA Protocol 4.10+	
GNSS	SV Range	gnssId:svId	single svId	(strict)	(extended)	(strict)	(extended)
GPS	G1-G32	0:1-32	1-32	1-32	1-32	1-32	1-32
SBAS	S120-S158	1:120-158	120-158	33-64	33-64,152-158	33-64	33-64,152-158
Galileo	E1-E36	2:1-36	211-246	-	301-336	1-36	1-36

[1] While not defined by NMEA 4.10, u-blox receivers will use system ID 4 for BeiDou in this mode.

CONFIDENTIAL

		UBX Protocol		NMEA Protocol 2.x–4.0		NMEA Protocol 4.10+	
GNSS	**SV Range**	**gnssId:svId**	**single svId**	**(strict)**	**(extended)**	**(strict)**	**(extended)**
BeiDou	B1-B37	3:1-37	159-163,33-64	-	401-437	1-37	1-37
IMES	I1-I10	4:1-10	173-182	n/a	173-182	n/a	173-182
QZSS	Q1-Q10	5:1-10	193-202	n/a	193-202	n/a	193-202
GLONASS	R1-R32, R?	6:1-32, 6:255	65-96, 255	65-96, null	65-96, null	65-96, null	65-96, null

Note that GLONASS satellites can be tracked before they have been identified. In UBX messages such unknown satellites will be reported with svId 255. In NMEA messages they will be null (empty) fields. Product-related documentation and u-center will use R? to label unidentified GLONASS satellites.

1.5.4 Signal identifiers

A summary of all the signal identification schemes used in the NMEA protocol and the UBX protocol is provided in the following table.

	UBX Protocol		NMEA Protocol 4.10	
Signal	**gnssId**	**sigId**	**System ID**	**Signal ID**
GPS L1C/A[2]	0	0	1	1
GPS L2 CL	0	3	1	6
GPS L2 CM	0	4	1	5
Galileo E1 C[2]	2	0	3	7
Galileo E1 B[2]	2	1	3	7
Galileo E5 bI	2	5	3	2
Galileo E5 bQ	2	6	3	2
BeiDou B1I D1[2]	3	0	4[3]	1[4]
BeiDou B1I D2[2]	3	1	4[3]	1[4]
BeiDou B2I D1	3	2	4[3]	3[4]
BeiDou B2I D2	3	3	4[3]	3[4]
QZSS L1C/A[2]	5	0		
QZSS L2 CM	5	4		
QZSS L2 CL	5	5		
GLONASS L1 OF[2]	6	0	2	1
GLONASS L2 OF	6	2	2	3

1.6 Message types

The following message types are defined:

Message type	Description
Input	Messages that are input to the receiver and never output. E.g. UBX-MGA-GPS-EPH.
Output	Messages that are output by the receiver in no particular interval and never input. E.g. UBX-ACK-ACK.

[2] UBX messages that do not have an explicit `sigId` field contain information about the subset of signals marked.

[3] While not defined by NMEA 4.10, u-blox receivers will use system ID 4 for BeiDou in this mode.

[4] BeiDou system ID and signal ID are not defined in the NMEA protocol version 4.10, values shown in the table are valid for u-blox products only.

CONFIDENTIAL

Message type	Description
Input/output	Messages that can be output by or input to the receiver. E.g. UBX-MGA-DBD-DATA0.
Periodic	Messages that are output in regular intervals but cannot be polled. E.g. UBX-NAV-EOE.
Periodic/polled	Messages that are output in regular intervals and can be polled. E.g. UBX-NAV-PVT.
Command	Messages that are a command to the receiver. Similar to type *Input* these are input-only. E.g. UBX-CFG-RST.
Get	Output-only configuration or command messages. E.g. UBX-CFG-OTP-OTPCONTENT.
Set	Input-only configuration or command messages. E.g. UBX-CFG-VALDEL.
Get/set	Input/output configuration or command messages.
Polled	Non-periodic messages that can only be polled. E.g. UBX-MON-VER.
Poll request	Poll request. E.g. UBX-MGA-DBD-POLL.

CONFIDENTIAL

2 NMEA protocol

The following sections give an overview of the NMEA messages used by u-blox positioning receivers.

By default, the NMEA messages sent by u-blox positioning receivers are based on the NMEA 0183 version 4.10 standard. For further information on the NMEA standard, refer to the *NMEA 0183 Standard for Interfacing Marine Electronic Devices*, Version 4.10 June, 2012 which is available on http://www.nmea.org/.

2.1 NMEA frame structure

The following figure shows the structure of a NMEA protocol message (called "sentences" in the standard).

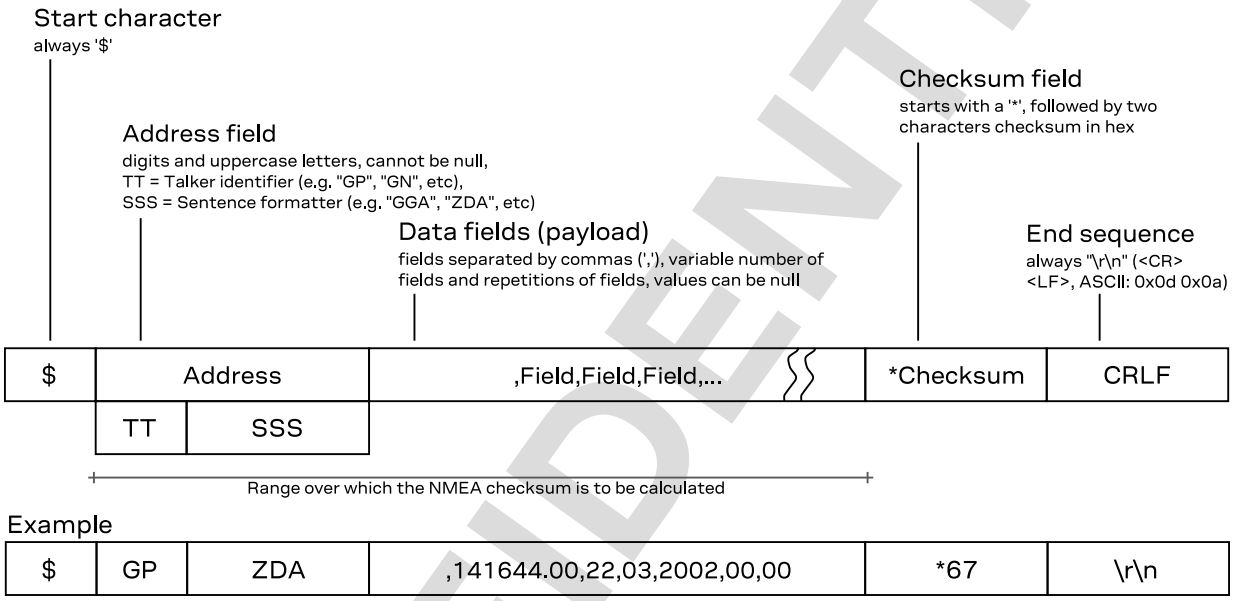

Example

$	GP	ZDA	,141644.00,22,03,2002,00,00	*67	\r\n

2.2 NMEA protocol configuration

The NMEA protocol on u-blox receivers can be configured for customer applications by using the Configuration interface (CFG-NMEA-* items).

There are four NMEA standards supported. The default NMEA version is 4.10. Alternatively versions 4.00, 2.3, and 2.1 can be enabled. See CFG-NMEA-PROTVER for changing the version. See NMEA multi-GNSS operation and NMEA data fields for details on how this affects the output.

The following filtering flags can be used to configure the output of some NMEA message fields:

Filter	Configuration Item	Description
Position filtering	CFG-NMEA-OUT_INVFIX	Enable to permit positions from failed or invalid fixes to be reported (with the "V" status flag to indicate that the data is not valid).
Valid position filtering	CFG-NMEA-OUT_MSKFIX	Enable to permit positions from invalid fixes to be reported (with the "V" status flag to indicate that the data is not valid).
Time filtering	CFG-NMEA-OUT_INVTIME	Enable to permit the receiver's best knowledge of time to be output, even though it might be wrong.
Date filtering	CFG-NMEA-OUT_INVDATE	Enable to permit the receiver's best knowledge of date to be output, even though it might be wrong.

CONFIDENTIAL

Filter	Configuration Item	Description
GPS-only filtering	CFG-NMEA-OUT_ONLYGPS	Enable to restrict output to only report GPS satellites.
Track filtering	CFG-NMEA-OUT_FROZENCOG	Enable to permit course over ground (COG) to be reported even when it would otherwise be frozen.

The following filtering flags can be used to configure the output of some NMEA message flags:

Mode	Configuration Item	Description
Compatibility mode	CFG-NMEA-COMPAT	Some older NMEA applications expect the NMEA output to be formatted in a specific way, for example, they will only work if the latitude and longitude have exactly four digits behind the decimal point. u-blox receivers offer a compatibility mode to support these legacy applications.
Consideration mode	CFG-NMEA-CONSIDER	u-blox receivers use a sophisticated signal quality detection scheme, in order to produce the best possible position output. This algorithm considers all SV measurements, and may eventually decide to only use a subset thereof, if it improves the overall position accuracy. If consideration mode is enabled, all satellites, which were considered for navigation, are communicated as being used for the position determination. If consideration mode is disabled, only those satellites which after the consideration step remained in the position output are marked as being used.
Limit length mode	CFG-NMEA-LIMIT82	Enabling this mode will limit the NMEA sentence length to a maximum of 82 characters.
High precision mode	CFG-NMEA-HIGHPREC	Enabling this mode increases precision of the position output. Latitude and longitude then have seven digits after the decimal point, and altitude has three digits after the decimal point. Note: The high precision mode cannot be set in conjunction with either compatibility mode or Limit82 mode.

The following extended configuration options are available:

Option	Configuration Item(s)	Description
GNSS to filter	CFG-NMEA-FILT_GPS etc.	Filters satellites based on the GNSS they belong to.
Satellite numbering	CFG-NMEA-SVNUMBERING	This field configures the display of satellites that do not have an NMEA-defined value. Note: this does not apply to satellites with an unknown ID. See also Satellite identifiers.
Main Talker ID	CFG-NMEA-MAINTALKERID	By default the main Talker ID (i.e. the Talker ID used for all messages other than GSV) is determined by the GNSS assignment of the receiver's channels (see configuration items CFG-SIGNAL-*). This field enables the main Talker ID to be overridden. See also NMEA Talker ID.
GSV Talker ID	CFG-NMEA-GSVTALKERID	By default the Talker ID for GSV messages is GNSS-specific (as defined by NMEA). This field enables the GSV Talker ID to be overridden.
BDS Talker ID	CFG-NMEA-BDSTALKERID	By default the Talker ID for BeiDou is "GB". This field enables the BeiDou Talker ID to be overridden.

2.3 NMEA-proprietary messages

The NMEA standard allows for proprietary, manufacturer-specific messages to be added. These shall be marked with a manufacturer mnemonic. The mnemonic assigned to u-blox is UBX and is used for all non-standard messages. These proprietary NMEA messages therefore have the address field set to PUBX. The first data field in a PUBX message identifies the message number with two digits.

CONFIDENTIAL

2.4 NMEA multi-GNSS operation

Many applications that process NMEA messages assume that only a single GNSS is active. However, when multiple GNSS are configured, the NMEA specification requires the output to change in the following ways:

Main Talker ID The main NMEA Talker ID will be "GN" (e.g. instead of "GP" for a GPS-only receiver).

GSV Talker IDs The GSV message reports the signal strength of the visible satellites. However, the Talker ID it uses is specific to the GNSS it is reporting information for, so for a multi-GNSS receiver it will not be the same as the main Talker ID. While other messages use the "GN" Talker ID, the GSV message will use GNSS-specific Talker IDs. See also NMEA protocol configuration.

Multiple GSA and GRS messages Multiple GSA and GRS messages are output for each fix, one for each GNSS. This may confuse applications that assume they are output only once per position fix (as is the case for a single GNSS receiver).

GGA Talker IDs The NMEA specification indicates that the GGA message is GPS-specific. However, u-blox receivers support the output of a GGA message for each of the Talker IDs.

BeiDou and Galileo Only NMEA version 4.10 and later have support for these systems.

Extended satellite numbering In order to support some GNSS (e.g. BeiDou, Galileo, QZSS) that are not supported by some or all NMEA protocol versions, an "extended" SV numbering scheme can be enabled. This uses the NMEA-defined numbers where possible, but adds other number ranges to support other GNSS. Note however that these non-standard extensions require 3-digit numbers, which may not be supported by some NMEA parsing software. For example, QZSS satellites use numbers in the range 193 to 197. See NMEA protocol configuration and Satellite identifiers.

2.5 NMEA data fields

Various data fields in NMEA messages depend on NMEA protocol configuration or require a definition for their interpretation.

2.5.1 NMEA Talker ID

One of the ways the NMEA standard differs depending on the GNSS is by using a two-letter message identifier, the "Talker ID". The specific Talker ID used by a u-blox receiver will depend on the product and its configuration. The table below shows the Talker ID that will be used for various GNSS configurations by default.

GNSS	Talker ID	Comments
GPS, SBAS, QZSS	GP	NMEA 2.3+
GLONASS	GL	NMEA 2.3+
Galileo	GA	NMEA 4.10+
BeiDou	GB	NMEA 4.10+ (u-blox specific)
Any combination of GNSS	GN	

2.5.2 NMEA extra fields

The following extra fields are available in NMEA 4.10 and later.

Message	Extra fields
NMEA-Standard-GBS	`systemId` and `signalId`
NMEA-Standard-GNS	`navStatus`

CONFIDENTIAL

Message	Extra fields
NMEA-Standard-GRS	`systemId` and `signalId`
NMEA-Standard-GSA	`systemId`
NMEA-Standard-GSV	`signalId`
NMEA-Standard-RMC	`navStatus`

2.5.3 NMEA latitude and longitude format

According to the NMEA standard, latitude and longitude are output in the format *degrees, minutes and (decimal) fractions of minutes*. To convert to *degrees and fractions of degrees*, or *degrees, minutes, seconds and fractions of seconds*, the *minutes* and *fractional minutes* parts need to be converted. For example:

Format	Latitude	Longitude
Receiver output	`$GNRMC,014230.00,A,`**`4722.80340,N,00831.68218,E`**`,0.000,,120477,,,A,V*14`	
(d)ddmm.mmmmm	4722.80340 North	00831.68218 East
Degrees and minutes	47 degrees, 22.80340 minutes	8 degrees, 31.68218 minutes
Degrees	47.38005667 degrees	8.52803633 degrees
Degrees, minutes and seconds	47 degrees, 22 minutes, 48.2040 seconds	8 degrees, 31 minutes, 40.9308 seconds

2.5.4 NMEA GNSS, satellite and signal numbering

See GNSS, satellite and signal identifiers for details on how GNSS, satellites and signals are numbered in the NMEA protocol.

NMEA defines satellite numbering systems for some, but not all GNSS. The exact behavior depends on the configured NMEA protocol version and ("extended" or "strict") mode. See NMEA protocol configuration for details.

2.5.5 NMEA position fix flags

This section shows how u-blox positioning receivers implement the NMEA protocol and the conditions determining how flags are set.

The following flags are used in NMEA 4.10 and later.

NMEA Message	GLL, RMC	GGA	GLL, VTG	RMC, GNS
Field	**status**[5]	**quality**[6]	**posMode**[7]	**posMode**[7]
No position fix (at power-up, after losing satellite lock)	V	0	N	N
GNSS fix, but user limits exceeded	V	0	N	N
Dead reckoning fix, but user limits exceeded	V	6	E	E
Dead reckoning fix	A	6	E	E
RTK float	A	5	D	F
RTK fixed	A	4	D	R
2D GNSS fix	A	1 / 2	A / D	A / D
3D GNSS fix	A	1 / 2	A / D	A / D
Combined GNSS/dead reckoning fix	A	1 / 2	A / D	A / D

5 Possible *status* values: V = data invalid, A = data valid

6 Possible values for *quality*: 0 = No fix, 1 = autonomous GNSS fix, 2 = differential GNSS fix, 4 = RTK fixed, 5 = RTK float, 6 = estimated/dead reckoning fix

7 Possible values for *posMode*: N = No fix, E = estimated/dead reckoning fix, A = autonomous GNSS fix, D = differential GNSS fix, F = RTK float, R = RTK fixed

CONFIDENTIAL

Customers using high precision GNSS (HPG) products are recommended to select NMEA version 4.10, as earlier versions do no support the float RTK (F) and real time kinematic (R) mode indicator flags in all messages.

The following flags are used in NMEA 2.3 and later.

NMEA Message	GLL, RMC	GGA	GSA	GLL, VTG, RMC, GNS
Field	**status**[8]	**quality**[9]	**navMode**[10]	**posMode**[11]
No position fix (at power-up, after losing satellite lock)	V	0	1	N
GNSS fix, but user limits exceeded	V	0	1	N
Dead reckoning fix, but user limits exceeded	V	6	2	E
Dead reckoning fix	A	6	2	E
2D GNSS fix	A	1 / 2	2	A / D
3D GNSS fix	A	1 / 2	3	A / D
Combined GNSS/dead reckoning fix	A	1 / 2	3	A / D

The flags in NMEA 2.1 and earlier are the same as NMEA 2.3 but with the following differences:

- The *posMode* field is not output for GLL, RMC and VTG messages (each message has one field less).
- The GGA *quality* field is set to 1 (instead of 6) for both types of dead reckoning fix.

2.5.6 NMEA output of invalid or unknown data

By default the receiver will not output invalid data. In such cases, it will output empty fields. See NMEA protocol configuration for options to adjust this behavior.

A valid position fix is reported as follows:

```
$GPGLL,4717.11634,N,00833.91297,E,124923.00,A,A*6E
```

An invalid position fix (but valid time) is reported as follows:

```
$GPGLL,,,,,124924.00,V,N*42
```

If the time is unknown (e.g. during a cold start):

```
$GPGLL,,,,,,V,N*64
```

☞ Unlike the NMEA standard behavior to invalid data, dead reckoning products always report a position. It is marked as invalid (V) when the user limits are exceeded or valid (A) if the user limits are met.

2.6 NMEA messages overview

Message	*Class/ID*	*Description (Type)*
NMEA-Standard – Standard NMEA messages		
NMEA-Standard-DTM	0xf0 0x0a	• Datum reference (Output)
NMEA-Standard-GAQ	0xf0 0x45	• Poll a standard message (Talker ID GA) (Poll request)
NMEA-Standard-GBQ	0xf0 0x44	• Poll a standard message (Talker GB) (Poll request)

8 Possible values for *status*: V = data invalid, A = data valid

9 Possible values for *quality*: 0 = no fix, 1 = autonomous GNSS fix, 2 = differential GNSS fix, 4 = RTK fixed, 5 = RTK float, 6 = estimated/dead reckoning fix

10 Possible values for *navMode*: 1 = No fix, 2 = 2D fix, 3 = 3D fix

11 Possible values for *posMode*: N = No fix, E = estimated/dead reckoning fix, A = autonomous GNSS fix, D = differential GNSS fix

CONFIDENTIAL

Message	Class/ID	Description (Type)
NMEA-Standard-GBS	0xf0 0x09	• GNSS satellite fault detection (Output)
NMEA-Standard-GGA	0xf0 0x00	• Global positioning system fix data (Output)
NMEA-Standard-GLL	0xf0 0x01	• Latitude and longitude, with time of position fix and status (Output)
NMEA-Standard-GLQ	0xf0 0x43	• Poll a standard message (Talker ID GL) (Poll request)
NMEA-Standard-GNQ	0xf0 0x42	• Poll a standard message (Talker ID GN) (Poll request)
NMEA-Standard-GNS	0xf0 0x0d	• GNSS fix data (Output)
NMEA-Standard-GPQ	0xf0 0x40	• Poll a standard message (Talker ID GP) (Poll request)
NMEA-Standard-GRS	0xf0 0x06	• GNSS range residuals (Output)
NMEA-Standard-GSA	0xf0 0x02	• GNSS DOP and active satellites (Output)
NMEA-Standard-GST	0xf0 0x07	• GNSS pseudorange error statistics (Output)
NMEA-Standard-GSV	0xf0 0x03	• GNSS satellites in view (Output)
NMEA-Standard-RLM	0xf0 0x0b	• Return link message (RLM) (Output)
NMEA-Standard-RMC	0xf0 0x04	• Recommended minimum data (Output)
NMEA-Standard-TXT	0xf0 0x41	• Text transmission (Output)
NMEA-Standard-VLW	0xf0 0x0f	• Dual ground/water distance (Output)
NMEA-Standard-VTG	0xf0 0x05	• Course over ground and ground speed (Output)
NMEA-Standard-ZDA	0xf0 0x08	• Time and date (Output)
NMEA-PUBX – u-blox proprietary NMEA messages		
NMEA-PUBX-CONFIG	0xf1 0x41	• Set protocols and baud rate (Set)
NMEA-PUBX-POSITION	0xf1 0x00	• Poll a PUBX,00 message (Poll request) • Lat/Long position data (Output)
NMEA-PUBX-RATE	0xf1 0x40	• Set NMEA message output rate (Set)
NMEA-PUBX-SVSTATUS	0xf1 0x03	• Poll a PUBX,03 message (Poll request) • Satellite status (Output)
NMEA-PUBX-TIME	0xf1 0x04	• Poll a PUBX,04 message (Poll request) • Time of day and clock information (Output)

2.7 Standard messages

Standard NMEA messages as defined by the NMEA 0183 standard. See NMEA protocol for details.

2.7.1 DTM

2.7.1.1 Datum reference

Message	**NMEA-Standard-DTM** **Datum reference**
Type	Output
Comment	This message gives the difference between the current datum and the reference datum. The current datum defaults to WGS84. The reference datum cannot be changed and is always set to WGS84.
Information	*Class/ID:* 0xf0 0x0a *Number of fields:* 11
Structure	`$xxDTM,datum,subDatum,lat,NS,lon,EW,alt,refDatum*cs\r\n`
Examples	`$GPDTM,W84,,0.0,N,0.0,E,0.0,W84*6F` `$GPDTM,999,,0.08,N,0.07,E,-47.7,W84*1C`
Payload:	

Field	*Name*	*Format*	*Unit*	*Example*	*Description*

CONFIDENTIAL

0	xxDTM	string	-	$GPDTM	DTM Message ID (xx = current Talker ID, see NMEA Talker IDs table)
1	datum	string	-	W84	Local datum code: W84 = WGS84, P90 = PZ90, 999 = user-defined
2	subDatum	string	-	-	A null field (or a string describing the currently selected datum for protocol versions less than 14.00)
3	lat	numeric	min	0.08	Offset in Latitude
4	NS	character	-	S	North/South indicator
5	lon	numeric	min	0.07	Offset in Longitude
6	EW	character	-	E	East/West indicator
7	alt	numeric	m	-2.8	Offset in altitude
8	refDatum	string	-	W84	Reference datum code: W84 (WGS 84, fixed field)
9	cs	hexadecimal	-	*67	Checksum
10	CRLF	character	-	-	Carriage return and line feed

2.7.2 GAQ

2.7.2.1 Poll a standard message (Talker ID GA)

Message	**NMEA-Standard-GAQ** **Poll a standard message (Talker ID GA)**				
Type	Poll request				
Comment	Polls a standard NMEA message if the current Talker ID is GA.				
Information	*Class/ID:* 0xf0 0x45	*Number of fields:* 4			
Structure	`$xxGAQ,msgId*cs\r\n`				
Example	`$EIGAQ,RMC*2B`				
Payload:					
Field	*Name*	*Format*	*Unit*	*Example*	*Description*
0	xxGAQ	string	-	$EIGAQ	GAQ Message ID (xx = Talker ID of the device requesting the poll)
1	msgId	string	-	RMC	Message ID of the message to be polled
2	cs	hexadecimal	-	*2B	Checksum
3	CRLF	character	-	-	Carriage return and line feed

2.7.3 GBQ

2.7.3.1 Poll a standard message (Talker GB)

Message	**NMEA-Standard-GBQ** **Poll a standard message (Talker GB)**				
Type	Poll request				
Comment	Polls a standard NMEA message if the current Talker ID is GB				
Information	*Class/ID:* 0xf0 0x44	*Number of fields:* 4			
Structure	`$xxGBQ,msgId*cs\r\n`				
Example	`$EIGBQ,RMC*28`				
Payload:					
Field	*Name*	*Format*	*Unit*	*Example*	*Description*

CONFIDENTIAL

0	xxGBQ	string	-	$EIGBQ	GBQ Message ID (xx = Talker ID of the device requesting the poll)
1	msgId	string	-	RMC	Message ID of the message to be polled
2	cs	hexadecimal	-	*28	Checksum
3	CRLF	character	-	-	Carriage return and line feed

2.7.4 GBS

2.7.4.1 GNSS satellite fault detection

Message	**NMEA-Standard-GBS** **GNSS satellite fault detection**
Type	Output
Comment	This message outputs the results of the Receiver Autonomous Integrity Monitoring Algorithm (RAIM). • The fields **errLat**, **errLon** and **errAlt** output the standard deviation of the position calculation, using all satellites that pass the RAIM test successfully. • The fields **errLat**, **errLon** and **errAlt** are only output if the RAIM process passed successfully (i.e. no or successful edits happened). These fields are never output if 4 or fewer satellites are used for the navigation calculation (because, in such cases, integrity cannot be determined by the receiver autonomously). • The fields **prob**, **bias** and **stdev** are only output if at least one satellite failed in the RAIM test. If more than one satellites fail the RAIM test, only the information for the worst satellite is output in this message.
Information	*Class/ID:* 0xf0 0x09 *Number of fields:* 13
Structure	`$xxGBS,time,errLat,errLon,errAlt,svid,prob,bias,stddev,systemId,signalId*cs\r\n`
Examples	`$GPGBS,235503.00,1.6,1.4,3.2,,,,,,*40` `$GPGBS,235458.00,1.4,1.3,3.1,03,,-21.4,3.8,1,0*5B`

Payload:

Field	*Name*	*Format*	*Unit*	*Example*	*Description*
0	xxGBS	string	-	$GPGBS	GBS Message ID (xx = current Talker ID, see NMEA Talker IDs table)
1	time	hhmmss.ss	-	235503.00	UTC time to which this RAIM sentence belongs. See the section UTC representation in the Integration manual for details.
2	errLat	numeric	m	1.6	Expected error in latitude
3	errLon	numeric	m	1.4	Expected error in longitude
4	errAlt	numeric	m	3.2	Expected error in altitude
5	svid	numeric	-	03	Satellite ID of most likely failed satellite
6	prob	numeric	-	-	Probability of missed detection: null (not supported, fixed field)
7	bias	numeric	m	-21.4	Estimated bias of most likely failed satellite (a priori residual)
8	stddev	numeric	m	3.8	Standard deviation of estimated bias
9	systemId	numeric	-	1	NMEA-defined GNSS system ID, see Signal Identifiers table (only available in NMEA 4.10 and later)
10	signalId	numeric	-	-	NMEA-defined GNSS signal ID, see Signal Identifiers table (only available in NMEA 4.10 and later)
11	cs	hexadecimal	-	*5B	Checksum

CONFIDENTIAL

12	CRLF	character	-	-	Carriage return and line feed

2.7.5 GGA

2.7.5.1 Global positioning system fix data

Message	**NMEA-Standard-GGA** **Global positioning system fix data**
Type	Output
Comment	Time and position, together with GPS fixing-related data (number of satellites in use, and the resulting HDOP, age of differential data if in use, etc.). ☞ The output of this message is dependent on the currently selected datum (default: WGS84). The NMEA specification indicates that the GGA message is GPS-specific. However, when the receiver is configured for multi-GNSS, the GGA message contents will be generated from the multi-GNSS solution. For multi-GNSS use, it is recommended that the NMEA-GNS message is used instead.
Information	*Class/ID:* 0xf0 0x00 *Number of fields:* 17
Structure	`$xxGGA,time,lat,NS,lon,EW,quality,numSV,HDOP,alt,altUnit,sep,sepUnit,diffAge,diffStation*cs\r\n`
Example	`$GPGGA,092725.00,4717.11399,N,00833.91590,E,1,08,1.01,499.6,M,48.0,M,,*5B`

Payload:

Field	*Name*	*Format*	*Unit*	*Example*	*Description*
0	xxGGA	string	-	$GPGGA	GGA Message ID (xx = current Talker ID, see NMEA Talker IDs table)
1	time	hhmmss.ss	-	092725.00	UTC time. See the section UTC representation in the Integration manual for details.
2	lat	ddmm.mmmmm	-	4717.11399	Latitude (degrees and minutes), see format description
3	NS	character	-	N	North/South indicator
4	lon	dddmm.mmmmm	-	00833.91590	Longitude (degrees and minutes), see format description
5	EW	character	-	E	East/West indicator
6	quality	digit	-	1	Quality indicator for position fix, see position fix flags description
7	numSV	numeric	-	08	Number of satellites used (range: 0-12)
8	HDOP	numeric	-	1.01	Horizontal Dilution of Precision
9	alt	numeric	m	499.6	Altitude above mean sea level
10	altUnit	character	-	M	Altitude units: M (meters, fixed field)
11	sep	numeric	m	48.0	Geoid separation: difference between ellipsoid and mean sea level
12	sepUnit	character	-	M	Geoid separation units: M (meters, fixed field)
13	diffAge	numeric	s	-	Age of differential corrections (null when DGPS is not used)
14	diffStation	numeric	-	-	ID of station providing differential corrections (null when DGPS is not used)
15	cs	hexadecimal	-	*5B	Checksum
16	CRLF	character	-	-	Carriage return and line feed

2.7.6 GLL

CONFIDENTIAL

2.7.6.1 Latitude and longitude, with time of position fix and status

Message	**NMEA-Standard-GLL** **Latitude and longitude, with time of position fix and status**
Type	Output
Comment	☞ The output of this message is dependent on the currently selected datum (default: WGS84)
Information	*Class/ID:* 0xf0 0x01 *Number of fields:* 10
Structure	`$xxGLL,lat,NS,lon,EW,time,status,posMode*cs\r\n`
Example	`$GPGLL,4717.11364,N,00833.91565,E,092321.00,A,A*60`

Payload:

Field	*Name*	*Format*	*Unit*	*Example*	*Description*
0	`xxGLL`	string	-	$GPGLL	GLL Message ID (xx = current Talker ID, see NMEA Talker IDs table)
1	`lat`	ddmm.mmmmm	-	4717.11364	Latitude (degrees and minutes), see format description
2	`NS`	character	-	N	North/South indicator
3	`lon`	dddmm.mmmmm	-	00833.91565	Longitude (degrees and minutes), see format description
4	`EW`	character	-	E	East/West indicator
5	`time`	hhmmss.ss	-	092321.00	UTC time. See the section UTC representation in the Integration manual for details.
6	`status`	character	-	A	Data validity status, see position fix flags description
7	`posMode`	character	-	A	Positioning mode, see position fix flags description (only available in NMEA 2.3 and later)
8	`cs`	hexadecimal	-	*60	Checksum
9	`CRLF`	character	-	-	Carriage return and line feed

2.7.7 GLQ

2.7.7.1 Poll a standard message (Talker ID GL)

Message	**NMEA-Standard-GLQ** **Poll a standard message (Talker ID GL)**
Type	Poll request
Comment	Polls a standard NMEA message if the current Talker ID is GL
Information	*Class/ID:* 0xf0 0x43 *Number of fields:* 4
Structure	`$xxGLQ,msgId*cs\r\n`
Example	`$EIGLQ,RMC*3A`

Payload:

Field	*Name*	*Format*	*Unit*	*Example*	*Description*
0	`xxGLQ`	string	-	$EIGLQ	GLQ Message ID (xx = Talker ID of the device requesting the poll)
1	`msgId`	string	-	RMC	Message ID of the message to be polled
2	`cs`	hexadecimal	-	*3A	Checksum
3	`CRLF`	character	-	-	Carriage return and line feed

2.7.8 GNQ

CONFIDENTIAL

2.7.8.1 Poll a standard message (Talker ID GN)

Message	**NMEA-Standard-GNQ** **Poll a standard message (Talker ID GN)**
Type	Poll request
Comment	Polls a standard NMEA message if the current Talker ID is GN
Information	*Class/ID:* 0xf0 0x42 *Number of fields:* 4
Structure	`$xxGNQ,msgId*cs\r\n`
Example	`$EIGNQ,RMC*3A`

Payload:

Field	*Name*	*Format*	*Unit*	*Example*	*Description*
0	`xxGNQ`	string	-	$EIGNQ	GNQ Message ID (xx = Talker ID of the device requesting the poll)
1	`msgId`	string	-	RMC	Message ID of the message to be polled
2	`cs`	hexadecimal	-	*3A	Checksum
3	`CRLF`	character	-	-	Carriage return and line feed

2.7.9 GNS

2.7.9.1 GNSS fix data

Message	**NMEA-Standard-GNS** **GNSS fix data**
Type	Output
Comment	Time and position, together with GNSS fixing-related data (number of satellites in use, and the resulting HDOP, age of differential data if in use, etc.). ☞ The output of this message is dependent on the currently selected datum (default: WGS84)
Information	*Class/ID:* 0xf0 0x0d *Number of fields:* 16
Structure	`$xxGNS,time,lat,NS,lon,EW,posMode,numSV,HDOP,alt,sep,diffAge,diffStation,navStatus*cs\r\n`

Examples	`$GNGNS,103600.01,5114.51176,N,00012.29380,W,ANNN,07,1.18,111.5,45.6,,,V*00`
	`$GNGNS,122310.2,3722.425671,N,12258.856215,W,DAAA,14,0.9,1005.543,6.5,,,V*0E`
	`$GPGNS,122310.2,,,,,,07,,,,5.2,23,V*02`

Payload:

Field	*Name*	*Format*	*Unit*	*Example*	*Description*
0	`xxGNS`	string	-	$GPGNS	GNS Message ID (xx = current Talker ID, see NMEA Talker IDs table)
1	`time`	hhmmss.ss	-	091547.00	UTC time. See the section UTC representation in the Integration manual for details.
2	`lat`	ddmm.mmmmm	-	5114.50897	Latitude (degrees and minutes), see format description
3	`NS`	character	-	N	North/South indicator
4	`lon`	dddmm.mmmmm	-	00012.28663	Longitude (degrees and minutes), see format description
5	`EW`	character	-	E	East/West indicator
6	`posMode`	character	-	AAAA	Positioning mode, see position fix flags description. First character for GPS, second character for GLONASS, third character for Galileo, fourth character for BeiDou
7	`numSV`	numeric	-	10	Number of satellites used (range: 0-99)
8	`HDOP`	numeric	-	0.83	Horizontal Dilution of Precision

CONFIDENTIAL

9	alt	numeric	m	111.1	Altitude above mean sea level
10	sep	numeric	m	45.6	Geoid separation: difference between ellipsoid and mean sea level
11	diffAge	numeric	s	-	Age of differential corrections (null when DGPS is not used)
12	diffStation	numeric	-	-	ID of station providing differential corrections (null when DGPS is not used)
13	navStatus	character	-	V	Navigational status indicator: V (Equipment is not providing navigational status information, fixed field, only available in NMEA 4.10 and later)
14	cs	hexadecimal	-	*71	Checksum
15	CRLF	character	-	-	Carriage return and line feed

2.7.10 GPQ

2.7.10.1 Poll a standard message (Talker ID GP)

Message	**NMEA-Standard-GPQ** **Poll a standard message (Talker ID GP)**				
Type	Poll request				
Comment	Polls a standard NMEA message if the current Talker ID is GP				
Information	*Class/ID:* 0xf0 0x40		*Number of fields:* 4		
Structure	`$xxGPQ,msgId*cs\r\n`				
Example	`$EIGPQ,RMC*3A`				
Payload:					
Field	*Name*	*Format*	*Unit*	*Example*	*Description*
0	xxGPQ	string	-	$EIGPQ	GPQ Message ID (xx = Talker ID of the device requesting the poll)
1	msgId	string	-	RMC	Message ID of the message to be polled
2	cs	hexadecimal	-	*3A	Checksum
3	CRLF	character	-	-	Carriage return and line feed

2.7.11 GRS

2.7.11.1 GNSS range residuals

Message	**NMEA-Standard-GRS** **GNSS range residuals**				
Type	Output				
Comment	If less than 12 SVs are available, the remaining fields are output empty. If more than 12 SVs are used, only the residuals of the first 12 SVs are output, in order to remain consistent with the NMEA standard. **In a multi-GNSS system this message will be output multiple times, once for each GNSS.** ☞ This message relates to associated GGA and GSA messages.				
Information	*Class/ID:* 0xf0 0x06		*Number of fields:* 19		
Structure	`$xxGRS,time,mode{,residual},systemId,signalId*cs\r\n`				
Examples	`$GNGRS,104148.00,1,2.6,2.2,-1.6,-1.1,-1.7,-1.5,5.8,1.7,,,,,1,1*52` `$GNGRS,104148.00,1,,0.0,2.5,0.0,,2.8,,,,,,,1,5*52`				
Payload:					
Field	*Name*	*Format*	*Unit*	*Example*	*Description*

CONFIDENTIAL

0	xxGRS	string	-	$GPGRS	GRS Message ID (xx = current Talker ID, see NMEA Talker IDs table)
1	time	hhmmss.ss	-	082632.00	UTC time of associated position fix. See the section UTC representation in the Integration manual for details.
2	mode	digit	-	1	Computation method used: • 1 = Residuals were recomputed after the GGA position was computed (fixed)
Start of repeated group (12 times)					
3 + n	residual	numeric	m	0.54	Range residuals for SVs used in navigation. The SV order matches the order from the GSA sentence
End of repeated group (12 times)					
15	systemId	numeric	-	1	NMEA-defined GNSS system ID, see Signal Identifiers table (only available in NMEA 4.10 and later)
16	signalId	numeric	-	-	NMEA-defined GNSS signal ID, see Signal Identifiers table (only available in NMEA 4.10 and later)
17	cs	hexadecimal	-	*70	Checksum
18	CRLF	character	-	-	Carriage return and line feed

2.7.12 GSA

2.7.12.1 GNSS DOP and active satellites

Message	**NMEA-Standard-GSA** **GNSS DOP and active satellites**
Type	Output
Comment	The GNSS receiver operating mode, satellites used for navigation, and DOP values. • If less than 12 SVs are used for navigation, the remaining fields are left empty. If more than 12 SVs are used for navigation, only the IDs of the first 12 are output. • The SV numbers (fields 'svid') are in the range of 1 to 32 for GPS satellites, and 33 to 64 for SBAS satellites (33 = SBAS PRN 120, 34 = SBAS PRN 121, and so on) **In a multi-GNSS system this message will be output multiple times, once for each GNSS.**
Information	*Class/ID:* 0xf0 0x02 *Number of fields:* 21
Structure	`$xxGSA,opMode,navMode{,svid},PDOP,HDOP,VDOP,systemId*cs\r\n`
Example	`$GPGSA,A,3,23,29,07,08,09,18,26,28,,,,,1.94,1.18,1.54,1*0D`

Payload:

Field	*Name*	*Format*	*Unit*	*Example*	*Description*
0	xxGSA	string	-	$GPGSA	GSA Message ID (xx = current Talker ID, see NMEA Talker IDs table)
1	opMode	character	-	A	Operation mode: • M = Manually set to operate in 2D or 3D mode • A = Automatically switching between 2D or 3D mode
2	navMode	digit	-	3	Navigation mode, see position fix flags description
Start of repeated group (12 times)					
3 + n	svid	numeric	-	29	Satellite number
End of repeated group (12 times)					
15	PDOP	numeric	-	1.94	Position dilution of precision
16	HDOP	numeric	-	1.18	Horizontal dilution of precision
17	VDOP	numeric	-	1.54	Vertical dilution of precision

CONFIDENTIAL

18	systemId	numeric	-	1	NMEA-defined GNSS system ID, see Signal Identifiers table (only available in NMEA 4.10 and later)
19	cs	hexadecimal	-	*0D	Checksum
20	CRLF	character	-	-	Carriage return and line feed

2.7.13 GST

2.7.13.1 GNSS pseudorange error statistics

Message	**NMEA-Standard-GST** **GNSS pseudorange error statistics**
Type	Output
Comment	This message reports statistical information on the quality of the position solution.
Information	*Class/ID:* 0xf0 0x07 *Number of fields:* 11
Structure	`$xxGST,time,rangeRms,stdMajor,stdMinor,orient,stdLat,stdLong,stdAlt*cs\r\n`
Example	`$GPGST,082356.00,1.8,,,,1.7,1.3,2.2*7E`

Payload:

Field	*Name*	*Format*	*Unit*	*Example*	*Description*
0	xxGST	string	-	$GPGST	GST Message ID (xx = current Talker ID, see NMEA Talker IDs table)
1	time	hhmmss.ss	-	082356.00	UTC time of associated position fix. See the section UTC representation in the Integration manual for details.
2	rangeRms	numeric	m	1.8	RMS value of the standard deviation of the ranges
3	stdMajor	numeric	m	-	Standard deviation of semi-major axis
4	stdMinor	numeric	m	-	Standard deviation of semi-minor axis
5	orient	numeric	deg	-	Orientation of semi-major axis
6	stdLat	numeric	m	1.7	Standard deviation of latitude error
7	stdLong	numeric	m	1.3	Standard deviation of longitude error
8	stdAlt	numeric	m	2.2	Standard deviation of altitude error
9	cs	hexadecimal	-	*7E	Checksum
10	CRLF	character	-	-	Carriage return and line feed

2.7.14 GSV

2.7.14.1 GNSS satellites in view

Message	**NMEA-Standard-GSV** **GNSS satellites in view**
Type	Output
Comment	The number of satellites in view, together with each SV ID, elevation azimuth, and signal strength (C/No) value. Only four satellite details are transmitted in one message. **In a multi-GNSS system sets of GSV messages will be output multiple times, one set for each GNSS.**
Information	*Class/ID:* 0xf0 0x03 *Number of fields:* 7 + [1..4]·4
Structure	`$xxGSV,numMsg,msgNum,numSV{,svid,elv,az,cno},signalId*cs\r\n`

Examples	`$GPGSV,3,1,09,09,,,17,10,,,40,12,,,49,13,,,35,1*6F`
	`$GPGSV,3,2,09,15,,,44,17,,,45,19,,,44,24,,,50,1*64`
	`$GPGSV,3,3,09,25,,,40,1*6E`
	`$GPGSV,1,1,03,12,,,42,24,,,47,32,,,37,5*66`
	`$GAGSV,1,1,00,2*76`

CONFIDENTIAL

Payload:					
Field	*Name*	*Format*	*Unit*	*Example*	*Description*
0	`xxGSV`	string	-	$GPGSV	GSV Message ID (xx = GSV Talker ID, see NMEA Talker IDs table). Talker ID GN shall not be used.
1	`numMsg`	digit	-	3	Number of messages, total number of GSV messages being output (range: 1-9)
2	`msgNum`	digit	-	1	Number of this message (range: 1-numMsg)
3	`numSV`	numeric	-	10	Number of known satellites in view regarding both the talker ID and the signalId
Start of repeated group (1...4 times)					
4 + n·4	`svid`	numeric	-	23	Satellite ID
5 + n·4	`elv`	numeric	deg	38	Elevation (range: 0-90)
6 + n·4	`az`	numeric	deg	230	Azimuth (range: 0-359)
7 + n·4	`cno`	numeric	dBHz	44	Signal strength (C/N0, range: 0-99), null when not tracking
End of repeated group (1...4 times)					
4 + N·4	`signalId`	numeric	-	-	NMEA-defined GNSS signal ID, see Signal Identifiers table (only available in NMEA 4.10 and later)
5 + N·4	`cs`	hexadecimal	-	*7F	Checksum
6 + N·4	`CRLF`	character	-	-	Carriage return and line feed

2.7.15 RLM

2.7.15.1 Return link message (RLM)

Message	**NMEA-Standard-RLM** **Return link message (RLM)**
Type	Output
Comment	The RLM sentence is used to transfer a Return link message from a Cospas-Sarsat recognized Return link service provider (RLSP). The RLM sentence supports communications to an emitting beacon once a distress alert has been detected, located and confirmed. The communications may include acknowledgement of the alert to the emitting beacon as well as optional text messages, and may also include remote beacon configuration and testing.
Information	*Class/ID:* 0xf0 0x0b *Number of fields:* 7
Structure	`$xxRLM,beacon,time,code,body*cs\r\n`
Examples	`$GARLM,00000078A9FBAD5,083559.00,3,C45B*57` `$GARLM,F7129D41BC6A78C,034433.02,3,B63CA732AFD419D2*57`

Payload:					
Field	*Name*	*Format*	*Unit*	*Example*	*Description*
0	`xxRLM`	string	-	$GARLM	RLM message ID (xx = current Talker ID, see NMEA Talker IDs table)
1	`beacon`	hexadecimal	-	00000078A 9FBAD5	Beacon ID, identifies beacon intended to receive this message (fixed length 15 hexadecimal character field)
2	`time`	hhmmss.ss	-	083559.00	Time of reception field to indicate RLM timestamp in UTC. See the section UTC representation in the Integration manual for details.

CONFIDENTIAL

3	code	character	-	3	Message code field to identify type of RLM Message Service: • 0 = Reserved for future RLM services • 1 = Acknowledgement service RLM • 2 = Command service RLM • 3 = Message service RLM • 4-E = Reserved for future RLM services • F = Test service RLM (currently used only by the Galileo program)
4	body	hexadecimal	-	C45B	Message body encapsulates the data parameters provided by the RLSP into hexadecimal format.
5	cs	hexadecimal	-	*57	Checksum
6	CRLF	character	-	-	Carriage return and line feed

2.7.16 RMC

2.7.16.1 Recommended minimum data

Message	**NMEA-Standard-RMC** **Recommended minimum data**
Type	Output
Comment	The recommended minimum sentence defined by NMEA for GNSS system data. ☞ The output of this message is dependent on the currently selected datum (default: WGS84)
Information	*Class/ID:* 0xf0 0x04 *Number of fields:* 16
Structure	`$xxRMC,time,status,lat,NS,lon,EW,spd,cog,date,mv,mvEW,posMode,navStatus*cs\r\n`
Example	`$GPRMC,083559.00,A,4717.11437,N,00833.91522,E,0.004,77.52,091202,,,A,V*57`
Payload:	

Field	*Name*	*Format*	*Unit*	*Example*	*Description*
0	xxRMC	string	-	$GPRMC	RMC Message ID (xx = current Talker ID, see NMEA Talker IDs table)
1	time	hhmmss.ss	-	083559.00	UTC time. See the section UTC representation in the Integration manual for details.
2	status	character	-	A	Data validity status, see position fix flags description
3	lat	ddmm.mmmmm	-	4717.11437	Latitude (degrees and minutes), see format description
4	NS	character	-	N	North/South indicator
5	lon	dddmm.mmmmm	-	00833.91522	Longitude (degrees and minutes), see format description
6	EW	character	-	E	East/West indicator
7	spd	numeric	knots	0.004	Speed over ground
8	cog	numeric	degrees	77.52	Course over ground
9	date	ddmmyy	-	091202	Date in day, month, year format. See the section UTC representation in the Integration manual for details.
10	mv	numeric	degrees	-	Magnetic variation value
11	mvEW	character	-	-	Magnetic variation E/W indicator
12	posMode	character	-	A	Mode Indicator, see position fix flags description (only available in NMEA 2.3 and later)
13	navStatus	character	-	V	Navigational status indicator: V (Equipment is not providing navigational status information, fixed field, only available in NMEA 4.10 and later)

CONFIDENTIAL

14	cs	hexadecimal	-	*57	Checksum
15	CRLF	character	-	-	Carriage return and line feed

2.7.17 TXT

2.7.17.1 Text transmission

Message	**NMEA-Standard-TXT** **Text transmission**
Type	Output
Comment	This message outputs various information on the receiver, such as power-up screen, software version etc. This message can be configured using the CFG-INFMSG configuration group.
Information	*Class/ID:* 0xf0 0x41 *Number of fields:* 7
Structure	`$xxTXT,numMsg,msgNum,msgType,text*cs\r\n`
Examples	`$GPTXT,01,01,02,u-blox ag - www.u-blox.com*50` `$GPTXT,01,01,02,ANTARIS ATR0620 HW 00000040*67`

Payload:

Field	*Name*	*Format*	*Unit*	*Example*	*Description*
0	xxTXT	string	-	$GPTXT	TXT Message ID (xx = current Talker ID, see NMEA Talker IDs table)
1	numMsg	numeric	-	01	Total number of messages in this transmission (range: 1-99)
2	msgNum	numeric	-	01	Message number in this transmission (range: 1-numMsg)
3	msgType	numeric	-	02	Text identifier (u-blox receivers specify the type of the message with this number): • 00 = Error • 01 = Warning • 02 = Notice • 07 = User
4	text	string	-	www.u-blox.com	Any ASCII text
5	cs	hexadecimal	-	*67	Checksum
6	CRLF	character	-	-	Carriage return and line feed

2.7.18 VLW

2.7.18.1 Dual ground/water distance

Message	**NMEA-Standard-VLW** **Dual ground/water distance**
Type	Output
Comment	The distance traveled, relative to the water and over the ground. This message relates to the odometer feature detailed in the Integration manual.
Information	*Class/ID:* 0xf0 0x0f *Number of fields:* 11
Structure	`$xxVLW,twd,twdUnit,wd,wdUnit,tgd,tgdUnit,gd,gdUnit*cs\r\n`
Example	`$GPVLW,,N,,N,15.8,N,1.2,N*06`

Payload:

Field	*Name*	*Format*	*Unit*	*Example*	*Description*
0	xxVLW	string	-	$GPVLW	VLW Message ID (xx = current Talker ID, see NMEA Talker IDs table)

CONFIDENTIAL

1	twd	numeric	nmi	-	Total cumulative water distance: null (fixed field)
2	twdUnit	character	-	N	Total cumulative water distance units: N (nautical miles, fixed field)
3	wd	numeric	nmi	-	Water distance since reset: null (fixed field)
4	wdUnit	character	-	N	Water distance since reset units: N (nautical miles, fixed field)
5	tgd	numeric	nmi	15.8	Total cumulative ground distance (only available in NMEA 4.00 and later)
6	tgdUnit	character	-	N	Total cumulative ground distance units: N (nautical miles, fixed field, only available in NMEA 4.00 and later)
7	gd	numeric	nmi	1.2	Ground distance since reset (only available in NMEA 4.00 and later)
8	gdUnit	character	-	N	Ground distance since reset units: N (nautical miles, fixed field, only available in NMEA 4.00 and later)
9	cs	hexadecimal	-	*06	Checksum
10	CRLF	character	-	-	Carriage return and line feed

2.7.19 VTG

2.7.19.1 Course over ground and ground speed

Message	**NMEA-Standard-VTG** **Course over ground and ground speed**
Type	Output
Comment	Velocity is given as course over ground (COG) and speed over ground (SOG).
Information	*Class/ID:* 0xf0 0x05 *Number of fields:* 12
Structure	`$xxVTG,cogt,cogtUnit,cogm,cogmUnit,sogn,sognUnit,sogk,sogkUnit,posMode*cs\r\n`
Example	`$GPVTG,77.52,T,,M,0.004,N,0.008,K,A*06`
Payload:	

Field	*Name*	*Format*	*Unit*	*Example*	*Description*
0	xxVTG	string	-	$GPVTG	VTG Message ID (xx = current Talker ID, see NMEA Talker IDs table)
1	cogt	numeric	degrees	77.52	Course over ground (true)
2	cogtUnit	character	-	T	Course over ground units: T (degrees true, fixed field)
3	cogm	numeric	degrees	-	Course over ground (magnetic)
4	cogmUnit	character	-	M	Course over ground units: M (degrees magnetic, fixed field)
5	sogn	numeric	knots	0.004	Speed over ground
6	sognUnit	character	-	N	Speed over ground units: N (knots, fixed field)
7	sogk	numeric	km/h	0.008	Speed over ground
8	sogkUnit	character	-	K	Speed over ground units: K (kilometers per hour, fixed field)
9	posMode	character	-	A	Mode indicator, see position fix flags description (only available in NMEA 2.3 and later)
10	cs	hexadecimal	-	*06	Checksum

CONFIDENTIAL

11	CRLF	character	-	-	Carriage return and line feed

2.7.20 ZDA

2.7.20.1 Time and date

Message	**NMEA-Standard-ZDA** **Time and date**				
Type	Output				
Comment	UTC, day, month, year and local time zone.				
Information	*Class/ID:* 0xf0 0x08	*Number of fields:* 9			
Structure	`$xxZDA,time,day,month,year,ltzh,ltzn*cs\r\n`				
Example	`$GPZDA,082710.00,16,09,2002,00,00*64`				
Payload:					
Field	*Name*	*Format*	*Unit*	*Example*	*Description*
0	xxZDA	string	-	$GPZDA	ZDA Message ID (xx = current Talker ID, see NMEA Talker IDs table)
1	time	hhmmss.ss	-	082710.00	UTC Time. See the section UTC representation in the Integration manual for details.
2	day	dd	day	16	UTC day (range: 1-31)
3	month	mm	month	09	UTC month (range: 1-12)
4	year	yyyy	year	2002	UTC year
5	ltzh	xx	-	00	Local time zone hours (fixed field, always 00)
6	ltzn	zz	-	00	Local time zone minutes (fixed field, always 00)
7	cs	hexadecimal	-	*64	Checksum
8	CRLF	character	-	-	Carriage return and line feed

2.8 PUBX messages

Proprietary NMEA messages for u-blox positioning receivers. See also NMEA-proprietary messages.

2.8.1 CONFIG (PUBX,41)

2.8.1.1 Set protocols and baud rate

Message	**NMEA-PUBX-CONFIG** **Set protocols and baud rate**				
Type	Set				
Comment					
Information	*Class/ID:* 0xf1 0x41	*Number of fields:* 9			
Structure	`$PUBX,41,portId,inProto,outProto,baudrate,autobauding*cs\r\n`				
Example	`$PUBX,41,1,0007,0003,19200,0*25`				
Payload:					
Field	*Name*	*Format*	*Unit*	*Example*	*Description*
0	PUBX	string	-	$PUBX	Message ID, UBX protocol header, proprietary sentence
1	msgId	numeric	-	41	Proprietary message identifier

CONFIDENTIAL

2	portId	numeric	-	1	ID of communication port. See the section Communication ports in the Integration manual for details.
3	inProto	hexadecimal	-	0007	Input protocol mask. Bitmask, specifying which protocols(s) are allowed for input. See the section Communication ports in the Integration manual for details.
4	outProto	hexadecimal	-	0003	Output protocol mask. Bitmask, specifying which protocols(s) are allowed for input. See the section Communication ports in the Integration manual for details.
5	baudrate	numeric	bits/s	19200	Baud rate
6	autobauding	numeric	-	-	Autobauding: 1=enable, 0=disable (not supported on u-blox 5, set to 0)
7	cs	hexadecimal	-	*25	Checksum
8	CRLF	character	-	-	Carriage return and line feed

2.8.2 POSITION (PUBX,00)

2.8.2.1 Poll a PUBX,00 message

Message	**NMEA-PUBX-POSITION** **Poll a PUBX,00 message**
Type	Poll request
Comment	A PUBX,00 message is polled by sending the PUBX,00 message without any data fields.
Information	*Class/ID:* 0xf1 0x00 *Number of fields:* 4
Structure	`$PUBX,00*33\r\n`
Example	`$PUBX,00*33`
Payload:	

Field	*Name*	*Format*	*Unit*	*Example*	*Description*
0	PUBX	string	-	$PUBX	Message ID, UBX protocol header, proprietary sentence
1	msgId	numeric	-	00	Set to 00 to poll a PUBX,00 message
2	cs	hexadecimal	-	*33	Checksum
3	CRLF	character	-	-	Carriage return and line feed

2.8.2.2 Lat/Long position data

Message	**NMEA-PUBX-POSITION** **Lat/Long position data**
Type	Output
Comment	This message contains position solution data. The datum selection may be changed using the message UBX-CFG-DAT. ☞ The output of this message is dependent on the currently selected datum (default: WGS84).
Information	*Class/ID:* 0xf1 0x00 *Number of fields:* 23
Structure	`$PUBX,00,time,lat,NS,long,EW,altRef,navStat,hAcc,vAcc,SOG,COG,vVel,diffAge,HDOP,VDOP ↲ ,TDOP,numSvs,reserved,DR,*cs\r\n`
Example	`$PUBX,00,081350.00,4717.113210,N,00833.915187,E,546.589,G3,2.1,2.0,0.007,77.52,0.007 ↲ ,,0.92,1.19,0.77,9,0,0*5F`
Payload:	

Field	*Name*	*Format*	*Unit*	*Example*	*Description*
0	PUBX	string	-	$PUBX	Message ID, UBX protocol header, proprietary sentence

CONFIDENTIAL

1	msgId	numeric	-	00	Proprietary message identifier: 00
2	time	hhmmss.ss	-	081350.00	UTC time. See the section UTC representation in the Integration manual for details.
3	lat	ddmm. mmmmm	-	4717.113210	Latitude (degrees and minutes), see format description
4	NS	character	-	N	North/South Indicator
5	long	dddmm. mmmmm	-	00833.915187	Longitude (degrees and minutes), see format description
6	EW	character	-	E	East/West indicator
7	altRef	numeric	m	546.589	Altitude above user datum ellipsoid
8	navStat	string	-	G3	Navigation Status: • NF = No Fix • DR = Dead reckoning only solution • G2 = Stand alone 2D solution • G3 = Stand alone 3D solution • D2 = Differential 2D solution • D3 = Differential 3D solution • RK = Combined GPS + dead reckoning solution • TT = Time only solution
9	hAcc	numeric	m	2.1	Horizontal accuracy estimate
10	vAcc	numeric	m	2.0	Vertical accuracy estimate
11	SOG	numeric	km/h	0.007	Speed over ground
12	COG	numeric	deg	77.52	Course over ground
13	vVel	numeric	m/s	0.007	Vertical velocity (positive downwards)
14	diffAge	numeric	s	-	Age of differential corrections (blank when DGPS is not used)
15	HDOP	numeric	-	0.92	HDOP, Horizontal Dilution of Precision
16	VDOP	numeric	-	1.19	VDOP, Vertical Dilution of Precision
17	TDOP	numeric	-	0.77	TDOP, Time Dilution of Precision
18	numSvs	numeric	-	9	Number of satellites used in the navigation solution
19	reserved	numeric	-	-	Reserved, always set to 0
20	DR	numeric	-	-	DR used
21	cs	hexadecimal	-	*5B	Checksum
22	CRLF	character	-	-	Carriage return and line feed

2.8.3 RATE (PUBX,40)

2.8.3.1 Set NMEA message output rate

Message	**NMEA-PUBX-RATE** **Set NMEA message output rate**
Type	Set
Comment	Get/set message rate configuration (s) to/from the receiver. • Send rate is relative to the event a message is registered on. For example, if the rate of a navigation message is set to 2, the message is sent every second navigation solution.
Information	*Class/ID:* 0xf1 0x40 *Number of fields:* 11
Structure	`$PUBX,40,msgId,rddc,rus1,rus2,rusb,rspi,reserved*cs\r\n`
Example	`$PUBX,40,GLL,1,0,0,0,0,0*5D`

CONFIDENTIAL

Payload:					
Field	*Name*	*Format*	*Unit*	*Example*	*Description*
0	`PUBX`	string	-	$PUBX	Message ID, UBX protocol header, proprietary sentence
1	`ID`	numeric	-	40	Proprietary message identifier
2	`msgId`	string	-	GLL	NMEA message identifier
3	`rddc`	numeric	cycles	1	Output rate on I2C (DDC) • 0 disables that message from being output on this port • 1 means that this message is output every epoch
4	`rus1`	numeric	cycles	1	Output rate on USART 1 • 0 disables that message from being output on this port • 1 means that this message is output every epoch
5	`rus2`	numeric	cycles	1	Output rate on USART 2 • 0 disables that message from being output on this port • 1 means that this message is output every epoch
6	`rusb`	numeric	cycles	1	Output rate on USB • 0 disables that message from being output on this port • 1 means that this message is output every epoch
7	`rspi`	numeric	cycles	1	Output rate on SPI • 0 disables that message from being output on this port • 1 means that this message is output every epoch
8	`reserved`	numeric	-	-	Reserved: always fill with 0
9	`cs`	hexadecimal	-	*5D	Checksum
10	`CRLF`	character	-	-	Carriage return and line feed

2.8.4 SVSTATUS (PUBX,03)

2.8.4.1 Poll a PUBX,03 message

Message	**NMEA-PUBX-SVSTATUS** **Poll a PUBX,03 message**				
Type	Poll request				
Comment	A PUBX,03 message is polled by sending the PUBX,03 message without any data fields.				
Information	*Class/ID:* 0xf1 0x03 *Number of fields:* 4				
Structure	`$PUBX,03*30\r\n`				
Example	`$PUBX,03*30`				
Payload:					
Field	*Name*	*Format*	*Unit*	*Example*	*Description*
0	`PUBX`	string	-	$PUBX	Message ID, UBX protocol header, proprietary sentence
1	`msgId`	numeric	-	03	Set to 03 to poll a PUBX,03 message
2	`cs`	hexadecimal	-	*30	Checksum
3	`CRLF`	character	-	-	Carriage return and line feed

CONFIDENTIAL

2.8.4.2 Satellite status

Message	**NMEA-PUBX-SVSTATUS** **Satellite status**				
Type	Output				
Comment	The PUBX,03 message contains satellite status information.				
Information	*Class/ID:* 0xf1 0x03 *Number of fields:* 5 + n·6				
Structure	`$PUBX,03,GT{,sv,s,az,el,cno,lck},*cs\r\n`				
Example	`$PUBX,03,11,23,-,,,45,010,29,-,,,46,013,07,-,,,42,015,08,U,067,31,42,025,10,U,195,33 ↲ ,46,026,18,U,326,08,39,026,17,-,,,32,015,26,U,306,66,48,025,27,U,073,10,36,026,28,U, ↲ 089,61,46,024,15,-,,,39,014*0D`				
Payload:					
Field	*Name*	*Format*	*Unit*	*Example*	*Description*
0	`PUBX`	string	-	$PUBX	Message ID, UBX protocol header, proprietary sentence
1	`msgId`	numeric	-	03	Proprietary message identifier: 03
2	`n`	numeric	-	11	Number of GNSS satellites tracked
Start of repeated group (`n` times)					
3 + n·6	`sv`	numeric	-	23	Satellite ID according to UBX svId mapping (see Satellite Numbering)
4 + n·6	`s`	character	-	-	Satellite status: • - = Not used • U = Used in solution • e = Ephemeris available, but not used for navigation
5 + n·6	`az`	numeric	deg	-	Satellite azimuth (range: 0-359)
6 + n·6	`el`	numeric	deg	-	Satellite elevation (range: 0-90)
7 + n·6	`cno`	numeric	dBHz	45	Signal strength (C/N0, range 0-99), blank when not tracking
8 + n·6	`lck`	numeric	s	010	Satellite carrier lock time (range: 0-64) • 0 = code lock only • 64 = lock for 64 seconds or more
End of repeated group (`n` times)					
3 + n·6	`cs`	hexadecimal	-	*0D	Checksum
4 + n·6	`CRLF`	character	-	-	Carriage return and line feed

2.8.5 TIME (PUBX,04)

2.8.5.1 Poll a PUBX,04 message

Message	**NMEA-PUBX-TIME** **Poll a PUBX,04 message**				
Type	Poll request				
Comment	A PUBX,04 message is polled by sending the PUBX,04 message without any data fields.				
Information	*Class/ID:* 0xf1 0x04 *Number of fields:* 4				
Structure	`$PUBX,04*37\r\n`				
Example	`$PUBX,04*37`				
Payload:					
Field	*Name*	*Format*	*Unit*	*Example*	*Description*
0	`PUBX`	string	-	$PUBX	Message ID, UBX protocol header, proprietary sentence

CONFIDENTIAL

1	msgId	numeric	-	04	Set to 04 to poll a PUBX,04 message
2	cs	hexadecimal	-	*37	Checksum
3	CRLF	character	-	-	Carriage return and line feed

2.8.5.2 Time of day and clock information

Message	**NMEA-PUBX-TIME** **Time of day and clock information**				
Type	Output				
Comment					
Information	*Class/ID:* 0xf1 0x04	*Number of fields:* 12			
Structure	$PUBX,04,time,date,utcTow,utcWk,leapSec,clkBias,clkDrift,tpGran,*cs\r\n				
Example	$PUBX,04,073731.00,091202,113851.00,1196,15D,1930035,-2660.664,43,*3C				
Payload:					
Field	*Name*	*Format*	*Unit*	*Example*	*Description*
0	PUBX	string	-	$PUBX	Message ID, UBX protocol header, proprietary sentence
1	msgId	numeric	-	04	Proprietary message identifier: 04
2	time	hhmmss.ss	-	073731.00	UTC time. See the section UTC representation in the Integration manual for details.
3	date	ddmmyy	-	091202	UTC date, day, month, year. See the section UTC representation in the Integration manual for details.
4	utcTow	numeric	s	113851.00	UTC time of week
5	utcWk	numeric	-	1196	UTC week number, continues beyond 1023
6	leapSec	numeric/ text	s	15D	Leap seconds (not supported for protocol versions less than 13.01) The number is marked with a *D* if the value is the firmware default value. If the value is not marked it has been received from a satellite.
7	clkBias	numeric	ns	1930035	Receiver clock bias
8	clkDrift	numeric	ns/s	-2660.664	Receiver clock drift
9	tpGran	numeric	ns	43	Time pulse granularity, the quantization error of the TIMEPULSE pin
10	cs	hexadecimal	-	*3C	Checksum
11	CRLF	character	-	-	Carriage return and line feed

CONFIDENTIAL

3 UBX protocol

3.1 UBX protocol key features

u-blox receivers support a u-blox-proprietary protocol to communicate with a host computer. This protocol has the following key features:

- Compact – uses 8-bit binary data.
- Checksum Protected – uses a low-overhead checksum algorithm
- Modular – uses a two-stage message identifier (Class and Message ID)

3.2 UBX frame structure

The structure of a basic UBX frame is shown in the following diagram.

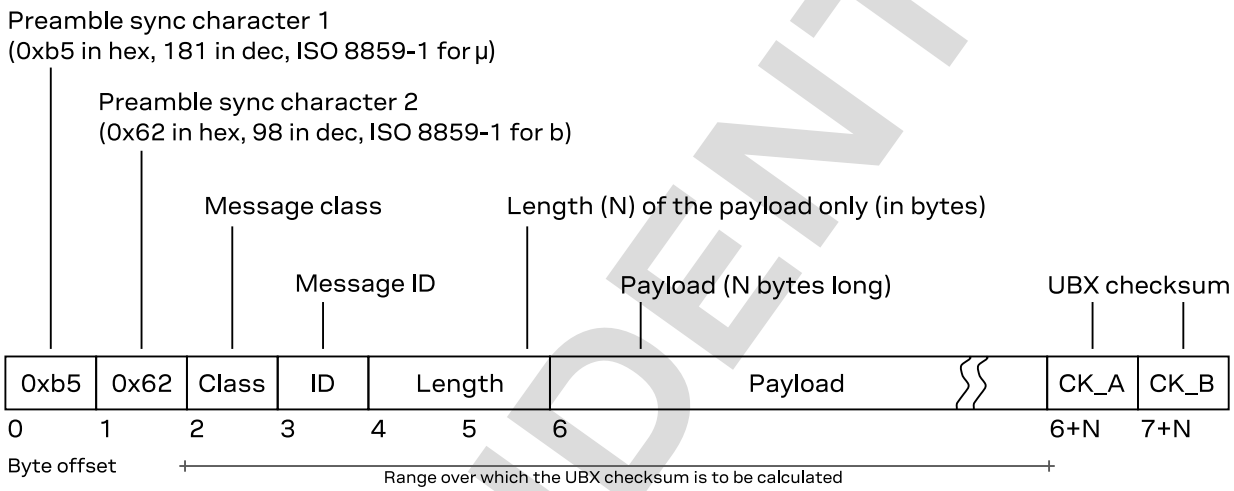

- Every *frame* starts with a 2-byte *preamble* consisting of two synchronization characters: `0xb5` and `0x62`.
- A 1-byte *message class* field follows. A class is a group of messages that are related to each other.
- A 1-byte *message ID* field defines the message that is to follow.
- A 2-byte *length* field follows. The length is defined as being that of the payload only. It does not include the preamble, message class, message ID, length, or UBX checksum fields. The number format of the length field is an unsigned little-endian 16-bit integer (a "U2" in UBX data types).
- The *payload* field contains a variable number (= *length*) of bytes.
- The two 1-byte *CK_A* and *CK_B* fields hold a 16-bit checksum whose calculation is defined below. This concludes the frame.

CONFIDENTIAL

3.3 UBX payload definition rules

This section contains the rules and guidelines for UBX message payloads. See also UBX message example.

3.3.1 UBX structure packing

Values are placed in such an order that structure packing is not a problem. This means that two-byte values shall start on offsets that are a multiple of two; four-byte values shall start at a multiple of four; and so on.

3.3.2 UBX reserved elements

Some messages contain reserved fields or bits to allow for future expansion. The contents of these elements should be ignored in output messages and must be set to zero in input messages. Where a message is output and subsequently returned to the receiver as an input message, reserved elements can either be explicitly set to zero or left with whatever value they were output with.

For fields in a bitfield the same rules apply. Note that bits not described are automatically reserved and are not explicitly stated (see UBX message example).

3.3.3 UBX undefined values

The description of some fields provide specific meanings for specific values. For example, the field `gnssId` appears in many UBX messages and uses 0 to indicate GPS, 1 for SBAS and so on (see GNSS identifiers for details); however it is usually stored in a byte with far more possible values than the handful currently defined. All such undefined values are reserved for future expansion and therefore should not be used.

3.3.4 UBX conditional values

Some UBX messages use validity flag fields to indicate whether the values of some value fields are valid. For example the UBX-NAV-PVT message has the `validDate` and `validTime` fields that indicate whether the date (`year`, `month` and `day` fields), and, respectively, the time (`hour`, `min` and `sec` fields) are valid. This means that these value fields will only contain meaningful data if the corresponding flag field is set (has the value 1).

3.3.5 UBX data types

The following data types (number formats) are defined.

Name	Type	Size (Bytes)	Range	Resolution
U1	unsigned 8-bit integer	1	$0...2^8-1$	1
RU1_3	unsigned 8-bit integer interpreted as binary floating point with 3 bit exponent, eeeb bbbb, (value & 0x1f) << (value >> 5)	1	$0...31 \cdot 2^7$ (non-continuous)	$\sim 2^{(value >> 5)}$
I1	signed 8-bit integer, two's complement	1	$-2^7...2^7-1$	1
X1	8-bit bitfield	1	n/a	n/a
U2	unsigned little-endian 116-bit integer	2	$0...2^{16}-1$	1
I2	signed little-endian 16-bit integer, two's complement	2	$-2^{15}...2^{15}-1$	1
X2	16-bit little-endian bitfield	2	n/a	n/a
U4	unsigned little-endian 32-bit integer	4	$0...2^{32}-1$	1

CONFIDENTIAL

Name	Type	Size (Bytes)	Range	Resolution
I4	signed little-endian 32-bit integer, two's complement	4	$-2^{31}...2^{31}-1$	1
X4	32-bit little-endian bitfield	4	n/a	n/a
R4	IEEE 754 single (32-bit) precision	4	$-2^{127}...2^{127}$	~ value·2^{-24}
R8	IEEE 754 double (64-bit) precision	8	$-2^{1023}...2^{1023}$	~ value·2^{-53}
CH	ASCII / ISO 8859-1 char (8-bit)	1	n/a	n/a
$U_{:n}$	unsigned bitfield value of *n* bits width	var.	variable	variable
$I_{:n}$	signed (two's complement) bitfield value of *n* bits width	var.	variable	variable
$S_{:n}$	signed bitfield value of *n* bits width, in sign (most significant bit) and magnitude (remaining bits) notation	var.	variable	variable

3.3.6 UBX fields scale and unit

Fields in UBX messages can have a unit defined. Whenever possible, SI units and symbols are used (e.g. "m" for meters, "s" for seconds). For civil (UTC) time representation units of years (y), months (month), days (d), hours (h), minutes (min) and seconds (s) are used.

Fields in UBX messages can have a scale factor defined. Unity (factor 1) is assumed if no scale is specified. For integer type fields this is often combined with a unit. When a scale is combined with a unit, the scale represents the smallest storage unit. For example, if meters (m) are expressed (stored) in centimeters the scale would be 0.01 (or 1e-2). This is equivalent of specifying a unit of centimeters (cm) and no scale.

3.3.7 UBX repeated fields

There are two types of repetitions in UBX messages. The first type specifies that a single field is repeated a constant number of times. This repetition is defined in the type of the field. For example, the UBX message example can specify a field `data` of type *U1[5]*. In this case the `data` field should be interpreted as an array of five U1 values.

The second type of repetition in messages is referred to as *repeated groups*, which groups one or more fields into a block of payload data. There are several types of repetition:

- The number of repetitions of *variable-by-field group* is indicated by another, earlier field in the same message. The number of repetitions can be zero or more, depending on the value of the referenced field.
- A *constant group* has a constant number of repetitions.
- An *optional group* is repeated zero or one times, depending on the available payload data. That is, the fields are present in the message only if the payload of the message is large enough to cover the whole group of fields.
- The number of repetitions of a *variable-by-size* group is given by the available payload size. The group will repeat until there is not enough payload data left to cover the whole group of fields another time.

Note that only some combinations of repeated groups of fields are possible in a single message. See also UBX payload decoding.

3.3.8 UBX payload decoding

UBX message payloads are designed so that the data (fields) can be extracted by a single pass through the payload from start to end. Fixed-size messages are the trivial case where the offset of all fields is unambiguously defined. Variable-size messages have variable number of repetitions of

CONFIDENTIAL

one or multiple groups of fields. For groups where the number of repetitions is given by the value of another field, that field can always be found at a fixed offset in the message payload before the respective group of fields. Groups whose number of repetitions depend on the payload size can only be the last group of fields in a message and only one such group may exist in a message. See also UBX repeated fields.

3.4 UBX checksum

The checksum is calculated over the message, starting and including the class field up until, but excluding, the checksum fields (see UBX frame structure).

The checksum algorithm used is the 8-bit Fletcher algorithm, which is used in the TCP standard RFC 1145). This algorithm works as follows:

- `Buffer[N]` is an array of bytes that contains the data over which the checksum is to be calculated.
- The two `CK_A` and `CK_A` values are 8-bit unsigned integers, only! If implementing with larger-sized integer values, make sure to mask both `CK_A` and `CK_B` with the value `0xff` after both operations in the loop.
- After the loop, the two *U1* values contain the checksum, transmitted after the message payload, which concludes the frame.

```
CK_A = 0, CK_B = 0
For (I = 0; I < N; I++)
{
    CK_A = CK_A + Buffer[I]
    CK_B = CK_B + CK_A
}
```

3.5 UBX message flow

There are certain features associated with the messages being sent back and forth:

3.5.1 UBX acknowledgement

When messages from the class CFG are sent to the receiver, the receiver will send an "acknowledge" (UBX-ACK-ACK) or a "not acknowledge" (UBX-ACK-NAK) message back to the sender, depending on whether or not the message was processed correctly.

Some messages from other classes also use the same acknowledgement mechanism.

3.5.2 UBX polling mechanism

All messages that are output by the receiver in a periodic manner (i.e. messages in classes UBX-MON, UBX-NAV and UBX-RXM) and Get/Set type messages, such as the configuration messages in the UBX-CFG class, can also be polled.

The UBX protocol is designed so that messages can be polled by sending the message required to the receiver but without a payload (or with just a single parameter that identifies the poll request). The receiver then responds with the same message with the payload populated.

3.6 GNSS, satellite and signal numbering

See GNSS, satellite and signal identifiers for details on how GNSS, satellites and signals are numbered in the UBX protocol.

CONFIDENTIAL

3.7 UBX message example

This is an example of the definition of UBX messages as shown in the following sections.

Message ❶	**UBX-DEMO-EXAMPLE** **Example demo message**					
Type ❷	Periodic/polled					
Comment ❸	This is a comment that describes the use of the demo example message. There can be references to other sections in the documentation (such as: UBX protocol). ☞ Note that there can be important remarks here.					
Message ❹ *Structure*	*Header*	*Class ID*	*Length (bytes)*		*Payload*	*Checksum*
	0xb5 0x62	0x01 0x07	16 + numRepeat*4		*see below*	CK_A CK_B
Payload description: ❺						
Byte offset	*Type*	*Name*	*Scale*	*Unit*	*Description*	
0	U4	`aField`	-	-	a field that contains an unsigned integer with no particular scale or unit	
4	I4	`anotherField`	1e-2	m	a field that contains a length in meters (m) with a scale of 1e-2 (= 0.01), i.e. a length in centimeters	
8	X2	`bitfield` ❻	-	-	this field contains flags or values smaller than one byte, whose definition follows below (bits not described are reserved)	
bit 0	U:1	`aFieldValid`	-	-	the first bit in `bitfield` indicates whether the `aField` is valid or not (see UBX conditional values)	
bit 1	U:1	`someFlag`	-	-	the second bit is a flag (1 = true, 0 = false)	
bits 5...2	U:4	`aBitFieldValue`	-	-	a 4-bits value (range: 0...15)	
10	U1[5] ❼	`reserved0`	-	-	a reserved field, whose value shall be ignored (in output messages) or set to 0 (in input messages)	
15	U1	`numRepeat`	-	-	number of repetitions in the group of fields below	
Start of repeated group (`numRepeat` times) ❽						
16 + n*4	I2	`someValue`	-	-	a signed value in a repeated group of fields	
18 + n*4	U2	`anotherValue`	-	-	another value in a repeated group of fields	
End of repeated group (`numRepeat` times)						

❶ The first line shows the message name (see Naming). The second line shows a short description of the message.

❷ The message type (see Message types).

❸ This section contains comments that describe the message. Often links to other related sections in the documentation or other related messages are found here.

❹ The message structure gives the parameters for the UBX frame structure, notably the message class and message ID values and the payload length. For many messages the payload length is a fixed number (of bytes). Messages that contain repeated blocks of information (fields) have a variable payload (see UBX repeated fields).

CONFIDENTIAL

❺ The message payload definition is given as a list of fields and their parameters. Each field starts at a specified offset (in bytes) in the payload (see also UBX structure packing), is of a specific type (see UBX data types), has a unique name (within the message), and a description. Optionally, fields can have a scale and/or a unit (see UBX fields scale and unit).

❻ Bitfields ("X" types) are broken down into smaller parts. Each part can be one or more bits wide. Values that are two or more bits wide can be unsigned or one of two signed value representation (see UBX data types). Note that the ten unused bits 15...6 are not explicitly stated as UBX reserved elements.

❼ Fields can be arrays of values of the same type (see UBX repeated fields).

❽ Groups of fields can be repeated in the payload. The number of repetitions can be given by another field in the message (this example), a constant number, zero or one times (known as "optional group"), or derived from the remaining payload size (labeled as "repeated N times"). See also UBX repeated fields and UBX payload decoding.

3.8 UBX messages overview

Message	*Class/ID*	*Description (Type)*
UBX-ACK – Ack/Nak messages		
UBX-ACK-ACK	0x05 0x01	• Message acknowledged (Output)
UBX-ACK-NAK	0x05 0x00	• Message not acknowledged (Output)
UBX-CFG – Configuration and command messages		
UBX-CFG-ANT	0x06 0x13	• Antenna control settings (Get/set)
UBX-CFG-BATCH	0x06 0x93	• Get/set data batching configuration (Get/set)
UBX-CFG-CFG	0x06 0x09	• Clear, save and load configurations (Command)
UBX-CFG-DAT	0x06 0x06	• Set user-defined datum (Set) • The currently defined datum (Get)
UBX-CFG-GEOFENCE	0x06 0x69	• Geofencing configuration (Get/set)
UBX-CFG-GNSS	0x06 0x3e	• GNSS system configuration (Get/set)
UBX-CFG-INF	0x06 0x02	• Poll configuration for one protocol (Poll request) • Information message configuration (Get/set)
UBX-CFG-ITFM	0x06 0x39	• Jamming/interference monitor configuration (Get/set)
UBX-CFG-LOGFILTER	0x06 0x47	• Data logger configuration (Get/set)
UBX-CFG-MSG	0x06 0x01	• Poll a message configuration (Poll request) • Set message rate(s) (Get/set) • Set message rate (Get/set)
UBX-CFG-NAV5	0x06 0x24	• Navigation engine settings (Get/set)
UBX-CFG-NAVX5	0x06 0x23	• Navigation engine expert settings (Get/set)
UBX-CFG-NMEA	0x06 0x17	• Extended NMEA protocol configuration V1 (Get/set)
UBX-CFG-ODO	0x06 0x1e	• Odometer, low-speed COG engine settings (Get/set)
UBX-CFG-OTP	0x06 0x41	• Poll eFuse OTP content (Poll request) • eFuse OTP content (Get) • Write eFuse OTP content (Set) • Write file 0x20: USB vendor ID (Set) • Write file 0x21: USB vendor string (Set) • Write file 0x22: USB product ID (Set) • Write file 0x23: USB product string (Set) • Write file 0x30: receiver configuration (Set) • Write file 0x36: oscillator offset calibration (Set) • Write file 0xa6: host interface signature config (Set)

CONFIDENTIAL

Message	Class/ID	Description (Type)
UBX-CFG-PIO	0x06 0x2c	• Set PIO pins (Set)
UBX-CFG-PM2	0x06 0x3b	• Extended power management configuration (Get/set)
UBX-CFG-PMS	0x06 0x86	• Power mode setup (Get/set)
UBX-CFG-PRT	0x06 0x00	• Polls the configuration for one I/O port (Poll request) • Port configuration for UART ports (Get/set) • Port configuration for USB port (Get/set) • Port configuration for SPI port (Get/set) • Port configuration for I2C (DDC) port (Get/set)
UBX-CFG-PT2	0x06 0x59	• Production test configuration (Set)
UBX-CFG-PWR	0x06 0x57	• Put receiver in a defined power state (Set)
UBX-CFG-RATE	0x06 0x08	• Navigation/measurement rate settings (Get/set)
UBX-CFG-RINV	0x06 0x34	• Contents of remote inventory (Get/set)
UBX-CFG-RST	0x06 0x04	• Reset receiver / clear backup data structures (Command)
UBX-CFG-RXM	0x06 0x11	• RXM configuration (Get/set)
UBX-CFG-SBAS	0x06 0x16	• SBAS configuration (Get/set)
UBX-CFG-TP5	0x06 0x31	• Time pulse parameters (Get/set)
UBX-CFG-USB	0x06 0x1b	• USB configuration (Get/set)
UBX-CFG-USBTEST	0x06 0x58	• USB testing (Set)
UBX-CFG-VALDEL	0x06 0x8c	• Delete configuration item values (Set) • Delete configuration item values (with transaction) (Set)
UBX-CFG-VALGET	0x06 0x8b	• Get configuration items (Poll request) • Configuration items (Polled)
UBX-CFG-VALSET	0x06 0x8a	• Set configuration item values (Set) • Set configuration item values (with transaction) (Set)
UBX-INF – Information messages		
UBX-INF-DEBUG	0x04 0x04	• ASCII output with debug contents (Output)
UBX-INF-ERROR	0x04 0x00	• ASCII output with error contents (Output)
UBX-INF-NOTICE	0x04 0x02	• ASCII output with informational contents (Output)
UBX-INF-TEST	0x04 0x03	• ASCII output with test contents (Output)
UBX-INF-WARNING	0x04 0x01	• ASCII output with warning contents (Output)
UBX-LOG – Logging messages		
UBX-LOG-BATCH	0x21 0x11	• Batched data (Polled)
UBX-LOG-CREATE	0x21 0x07	• Create log file (Command)
UBX-LOG-ERASE	0x21 0x03	• Erase logged data (Command)
UBX-LOG-FINDTIME	0x21 0x0e	• Find index of a log entry based on a given time (Input) • Response to FINDTIME request (Output)
UBX-LOG-INFO	0x21 0x08	• Poll for log information (Poll request) • Log information (Output)
UBX-LOG-RETRIEVE	0x21 0x09	• Request log data (Command)
UBX-LOG-RETRIEVEBATCH	0x21 0x10	• Request batch data (Command)
UBX-LOG-RETRIEVEPOS	0x21 0x0b	• Position fix log entry (Output)
UBX-LOG-RETRIEVEPOSEXTRA	0x21 0x0f	• Odometer log entry (Output)
UBX-LOG-RETRIEVESTRING	0x21 0x0d	• Byte string log entry (Output)
UBX-LOG-STRING	0x21 0x04	• Store arbitrary string in on-board flash (Command)
UBX-MGA – GNSS assistance (A-GNSS) messages		

CONFIDENTIAL

Message	Class/ID	Description (Type)
UBX-MGA-ACK	0x13 0x60	• Multiple GNSS acknowledge message (Output)
UBX-MGA-ANO	0x13 0x20	• Multiple GNSS AssistNow Offline assistance (Input)
UBX-MGA-BDS	0x13 0x03	• BDS ephemeris assistance (Input) • BDS almanac assistance (Input) • BDS health assistance (Input) • BDS UTC assistance (Input) • BDS ionosphere assistance (Input)
UBX-MGA-DBD	0x13 0x80	• Poll the navigation database (Poll request) • Navigation database dump entry (Input/output)
UBX-MGA-GAL	0x13 0x02	• Galileo ephemeris assistance (Input) • Galileo almanac assistance (Input) • Galileo GPS time offset assistance (Input) • Galileo UTC assistance (Input)
UBX-MGA-GLO	0x13 0x06	• GLONASS ephemeris assistance (Input) • GLONASS almanac assistance (Input) • GLONASS auxiliary time offset assistance (Input)
UBX-MGA-GPS	0x13 0x00	• GPS ephemeris assistance (Input) • GPS almanac assistance (Input) • GPS health assistance (Input) • GPS UTC assistance (Input) • GPS ionosphere assistance (Input)
UBX-MGA-INI	0x13 0x40	• Initial position assistance (Input) • Initial time assistance (Input) • Initial clock drift assistance (Input) • Initial frequency assistance (Input) • Earth orientation parameters assistance (Input)
UBX-MGA-QZSS	0x13 0x05	• QZSS ephemeris assistance (Input) • QZSS almanac assistance (Input) • QZSS health assistance (Input)
UBX-MON – Monitoring messages		
UBX-MON-COMMS	0x0a 0x36	• Comm port information (Periodic/polled)
UBX-MON-GNSS	0x0a 0x28	• Information message major GNSS selection (Polled)
UBX-MON-HW	0x0a 0x09	• Hardware status (Periodic/polled)
UBX-MON-HW2	0x0a 0x0b	• Extended hardware status (Periodic/polled)
UBX-MON-HW3	0x0a 0x37	• I/O pin status (Periodic/polled)
UBX-MON-IO	0x0a 0x02	• I/O system status (Periodic/polled)
UBX-MON-MSGPP	0x0a 0x06	• Message parse and process status (Periodic/polled)
UBX-MON-PATCH	0x0a 0x27	• Installed patches (Polled)
UBX-MON-PIO	0x0a 0x24	• Production testing message for PIO pins (Polled)
UBX-MON-PT2	0x0a 0x2b	• Multi-GNSS production test monitor (Periodic/polled)
UBX-MON-RF	0x0a 0x38	• RF information (Periodic/polled)
UBX-MON-RXBUF	0x0a 0x07	• Receiver buffer status (Periodic/polled)
UBX-MON-RXR	0x0a 0x21	• Receiver status information (Output)
UBX-MON-SPAN	0x0a 0x31	• Signal characteristics (Periodic/polled)
UBX-MON-TEMP	0x0a 0x0e	• Poll temperature value and state (Poll request) • Temperature value and state (Periodic/polled)
UBX-MON-TXBUF	0x0a 0x08	• Transmitter buffer status (Periodic/polled)
UBX-MON-VER	0x0a 0x04	• Receiver and software version (Polled)
UBX-NAV – Navigation solution messages		

CONFIDENTIAL

Message	Class/ID	Description (Type)
UBX-NAV-CLOCK	0x01 0x22	• Clock solution (Periodic/polled)
UBX-NAV-COV	0x01 0x36	• Covariance matrices (Periodic/polled)
UBX-NAV-DOP	0x01 0x04	• Dilution of precision (Periodic/polled)
UBX-NAV-EOE	0x01 0x61	• End of epoch (Periodic)
UBX-NAV-GEOFENCE	0x01 0x39	• Geofencing status (Periodic/polled)
UBX-NAV-HPPOSECEF	0x01 0x13	• High precision position solution in ECEF (Periodic/polled)
UBX-NAV-HPPOSLLH	0x01 0x14	• High precision geodetic position solution (Periodic/polled)
UBX-NAV-ODO	0x01 0x09	• Odometer solution (Periodic/polled)
UBX-NAV-ORB	0x01 0x34	• GNSS orbit database info (Periodic/polled)
UBX-NAV-POSECEF	0x01 0x01	• Position solution in ECEF (Periodic/polled)
UBX-NAV-POSLLH	0x01 0x02	• Geodetic position solution (Periodic/polled)
UBX-NAV-PVT	0x01 0x07	• Navigation position velocity time solution (Periodic/polled)
UBX-NAV-RESETODO	0x01 0x10	• Reset odometer (Command)
UBX-NAV-SAT	0x01 0x35	• Satellite information (Periodic/polled)
UBX-NAV-SIG	0x01 0x43	• Signal information (Periodic/polled)
UBX-NAV-STATUS	0x01 0x03	• Receiver navigation status (Periodic/polled)
UBX-NAV-TIMEBDS	0x01 0x24	• BeiDou time solution (Periodic/polled)
UBX-NAV-TIMEGAL	0x01 0x25	• Galileo time solution (Periodic/polled)
UBX-NAV-TIMEGLO	0x01 0x23	• GLONASS time solution (Periodic/polled)
UBX-NAV-TIMEGPS	0x01 0x20	• GPS time solution (Periodic/polled)
UBX-NAV-TIMELS	0x01 0x26	• Leap second event information (Periodic/polled)
UBX-NAV-TIMEQZSS	0x01 0x27	• QZSS time solution (Periodic/polled)
UBX-NAV-TIMEUTC	0x01 0x21	• UTC time solution (Periodic/polled)
UBX-NAV-VELECEF	0x01 0x11	• Velocity solution in ECEF (Periodic/polled)
UBX-NAV-VELNED	0x01 0x12	• Velocity solution in NED frame (Periodic/polled)
UBX-RXM – Receiver manager messages		
UBX-RXM-MEASX	0x02 0x14	• Satellite measurements for RRLP (Periodic/polled)
UBX-RXM-PMREQ	0x02 0x41	• Power management request (Command)
UBX-RXM-RLM	0x02 0x59	• Galileo SAR short-RLM report (Output) • Galileo SAR long-RLM report (Output)
UBX-RXM-RTC5	0x02 0x23	• Real time clock status (Periodic/polled)
UBX-RXM-SFRBX	0x02 0x13	• Broadcast navigation data subframe (Output)
UBX-SEC – Security messages		
UBX-SEC-ECSIGN	0x27 0x04	• Signature for output message (Output)
UBX-SEC-UNIQID	0x27 0x03	• Unique chip ID (Output)
UBX-SEC-SESSID	0x27 0x05	• Session ID used for ECSIGN (Get/set)
UBX-TIM – Timing messages		
UBX-TIM-TM2	0x0d 0x03	• Time mark data (Periodic/polled)
UBX-TIM-TP	0x0d 0x01	• Time pulse time data (Periodic/polled)
UBX-TIM-VRFY	0x0d 0x06	• Sourced time verification (Periodic/polled)
UBX-UPD – Firmware update messages		
UBX-UPD-CERASE	0x09 0x16	• Chip erase the connected SQI flash (Command) • Chip erase the connected SQI flash (Output)
UBX-UPD-CRC	0x09 0x0d	• Check CRC of binary (Command)

CONFIDENTIAL

Message	Class/ID	Description (Type)
UBX-UPD-ERASE	0x09 0x0b	• Erase flash sector (Command) • Erase flash sector (Output)
UBX-UPD-FLDET	0x09 0x08	• Get the flash manufacturer and device IDs (Poll request) • Get the flash manufacturer and device IDs (Get)
UBX-UPD-FLWRI	0x09 0x0c	• Write flash data (area must be erased before) (Command) • Write flash data success indication (Output)
UBX-UPD-IDEN	0x09 0x06	• Identify flash loader version (Poll request) • Identify flash loader version (Get)
UBX-UPD-IMG	0x09 0x1a	• Write external image (Command)
UBX-UPD-POS	0x09 0x15	• Enable PLL during safeboot (Command)
UBX-UPD-QSIZE	0x09 0x09	• Get number of pending commands in queue (Poll request) • Number of pending commands in queue (Get)
UBX-UPD-RBOOT	0x09 0x0e	• Perform a watchdog reset (Command)
UBX-UPD-ROM	0x09 0x25	• ROM CRC (Polled)
UBX-UPD-SAFE	0x09 0x07	• Boot in safe environment from ROM or RAM (Command) • Start flash loader task (Command)
UBX-UPD-SETQ	0x09 0x0f	• Set maximum of pending commands in queue (Set)
UBX-UPD-SOS	0x09 0x14	• Poll backup restore status (Poll request) • Create backup in flash (Command) • Clear backup in flash (Command) • Backup creation acknowledge (Output) • System restored from backup (Output)

3.9 UBX-ACK (0x05)

The messages in the UBX-ACK class are used to indicate acknowledgement or rejection (i.e. negative acknowledgement) of input messages, such as UBX-CFG messages.

3.9.1 UBX-ACK-ACK (0x05 0x01)

3.9.1.1 Message acknowledged

Message	**UBX-ACK-ACK** **Message acknowledged**					
Type	Output					
Comment	Output upon processing of an input message. A UBX-ACK-ACK is sent as soon as possible but at least within one second.					
Message structure	*Header*	*Class*	*ID*	*Length (Bytes)*	*Payload*	*Checksum*
	0xb5 0x62	0x05	0x01	2	*see below*	CK_A CK_B

Payload description:

Byte offset	*Type*	*Name*	*Scale*	*Unit*	*Description*
0	U1	`clsID`	-	-	Class ID of the Acknowledged Message
1	U1	`msgID`	-	-	Message ID of the Acknowledged Message

3.9.2 UBX-ACK-NAK (0x05 0x00)

CONFIDENTIAL

3.9.2.1 Message not acknowledged

Message	**UBX-ACK-NAK** **Message not acknowledged**					
Type	Output					
Comment	Output upon processing of an input message. A UBX-ACK-NAK is sent as soon as possible but at least within one second.					
Message structure	*Header*	*Class*	*ID*	*Length (Bytes)*	*Payload*	*Checksum*
	0xb5 0x62	0x05	0x00	2	*see below*	CK_A CK_B

Payload description:

Byte offset	*Type*	*Name*	*Scale*	*Unit*	*Description*
0	U1	`clsID`	-	-	Class ID of the Not-Acknowledged Message
1	U1	`msgID`	-	-	Message ID of the Not-Acknowledged Message

3.10 UBX-CFG (0x06)

The messages in the UBX-CFG class are used to configure the receiver and poll current configuration values as well as for sending commands to the receiver. Unless stated otherwise, any message in this class sent to the receiver is either acknowledged (by a UBX-ACK-ACK message) if processed successfully or rejected (with a UBX-ACK-NAK message) if processed unsuccessfully.

3.10.1 UBX-CFG-ANT (0x06 0x13)

3.10.1.1 Antenna control settings

Message	**UBX-CFG-ANT** **Antenna control settings**					
Type	Get/set					
Comment	**This message is deprecated in protocol versions greater than 23.01. Use** UBX-CFG-VALSET, UBX-CFG-VALGET, UBX-CFG-VALDEL **instead.** See the Legacy UBX Message Fields Reference for the corresponding configuration item. This message allows the user to configure the antenna supervisor. The antenna supervisor can be used to detect the status of an active antenna and control it. It can be used to turn off the supply to the antenna in the event of a short cirquit (for example) or to manage power consumption in power save mode. Refer to antenna supervisor configuration in the Integration manual for more information regarding the behavior of the antenna supervisor. Refer to UBX-MON-HW for a description of the fields in the message used to obtain the status of the antenna. Note that not all pins can be used for antenna supervisor operation, it is recommended that you use the default pins, consult the Integration manual if you need to use other pins.					
Message structure	*Header*	*Class*	*ID*	*Length (Bytes)*	*Payload*	*Checksum*
	0xb5 0x62	0x06	0x13	4	*see below*	CK_A CK_B

Payload description:

Byte offset	*Type*	*Name*	*Scale*	*Unit*	*Description*
0	X2	`flags`	-	-	Antenna flag mask
bit 0	$U_{:1}$	`svcs`	-	-	Enable antenna supply voltage control signal
bit 1	$U_{:1}$	`scd`	-	-	Enable short circuit detection
bit 2	$U_{:1}$	`ocd`	-	-	Enable open circuit detection
bit 3	$U_{:1}$	`pdwnOnSCD`	-	-	Power down antenna supply if short circuit is detected. (only in combination with bit 1)

CONFIDENTIAL

bit 4	U:1	recovery	-	-	Enable automatic recovery from short state
2	X2	pins	-	-	Antenna pin configuration
bits 4...0	U:5	pinSwitch	-	-	PIO-pin used for switching antenna supply
bits 9...5	U:5	pinSCD	-	-	PIO-pin used for detecting a short in the antenna supply
bits 14...10	U:5	pinOCD	-	-	PIO-pin used for detecting open/not connected antenna
bit 15	U:1	reconfig	-	-	if set to one, and this command is sent to the receiver, the receiver will reconfigure the pins as specified.

3.10.2 UBX-CFG-BATCH (0x06 0x93)

3.10.2.1 Get/set data batching configuration

Message	**UBX-CFG-BATCH** **Get/set data batching configuration**					
Type	Get/set					
Comment	**This message is deprecated in protocol versions greater than 23.01. Use** UBX-CFG-VALSET, UBX-CFG-VALGET, UBX-CFG-VALDEL **instead.** Gets or sets the configuration for data batching. See Data Batching for more information.					
Message structure	*Header*	*Class*	*ID*	*Length (Bytes)*	*Payload*	*Checksum*
	0xb5 0x62	0x06	0x93	8	*see below*	CK_A CK_B

Payload description:

Byte offset	*Type*	*Name*	*Scale*	*Unit*	*Description*
0	U1	version	-	-	Message version (0x00 for this version)
1	X1	flags	-	-	Flags
bit 0	U:1	enable	-	-	Enable data batching
bit 2	U:1	extraPvt	-	-	Store extra PVT information The fields iTOW, tAcc, numSV, hMSL, vAcc, velN, velE, velD, sAcc, headAcc and pDOP in UBX-LOG-BATCH are only valid if this flag is set.
bit 3	U:1	extraOdo	-	-	Store odometer data The fields distance, totalDistance and distanceStd in UBX-LOG-BATCH are only valid if this flag is set. Note: the odometer feature itself must also be enabled.
bit 5	U:1	pioEnable	-	-	Enable PIO notification
bit 6	U:1	pioActiveLow	-	-	PIO is active low
2	U2	bufSize	-	-	Size of buffer in number of epochs to store
4	U2	notifThrs	-	-	Buffer fill level that triggers PIO notification, in number of epochs stored
6	U1	pioId	-	-	PIO ID to use for buffer level notification
7	U1	reserved0	-	-	Reserved

3.10.3 UBX-CFG-CFG (0x06 0x09)

CONFIDENTIAL

3.10.3.1 Clear, save and load configurations

Message	**UBX-CFG-CFG** **Clear, save and load configurations**
Type	Command
Comment	See Receiver configuration for a detailed description on how receiver configuration should be used. The behavior of this message has changed for protocol versions greater than 23.01. Use UBX-CFG-VALSET and UBX-CFG-VALDEL with the appropriate layers instead. These new messages support selective saving and clearing to retain the behavior removed from this message. The three masks which were used to clear, save and load a subsection of configuration have lost their meaning. It is no longer possible to save or clear a subsection of the configuration using this message. The behavior of the masks is now: • if any bit is set in the clearMask: all configuration in the selected non-volatile memory is deleted • if any bit is set in the saveMask: all current configuration is stored (copied) to the selected layers • if any bit is set in the loadMask: The curerent configuration is discarded and rebuilt from all the lower layers Note that commands can be combined. The sequence of execution is clear, save, then load. ☞ This message is deprecated in protocol versions greater than 23.01. Use UBX-CFG-VALSET, UBX-CFG-VALGET, UBX-CFG-VALDEL instead.

Message structure	*Header*	*Class*	*ID*	*Length (Bytes)*	*Payload*	*Checksum*
	0xb5 0x62	0x06	0x09	12 + [0,1]	*see below*	CK_A CK_B

Payload description:

Byte offset	*Type*	*Name*	*Scale*	*Unit*	*Description*
0	X4	`clearMask`	-	-	Mask for configuration to clear
bits 31...0	U:32	`clearAll`	-	-	Clear all saved configuration from the selected non-volatile memory if any bit is set
4	X4	`saveMask`	-	-	Mask for configuration to save
bits 31...0	U:32	`saveAll`	-	-	Save all current configuration to the selected non-volatile memory if any bit is set
8	X4	`loadMask`	-	-	Mask for configuration to load
bits 31...0	U:32	`loadAll`	-	-	Discard current configuration and rebuilt it from lower non-volatile memory layers if any bit is set
Start of optional group					
12	X1	`deviceMask`	-	-	Mask which selects the memory devices for saving and/or clearing operation Note that if a deviceMask is not provided, the receiver defaults the operation requested to battery-backed RAM (BBR) and Flash (if available)
bit 0	U:1	`devBBR`	-	-	Battery-backed RAM
bit 1	U:1	`devFlash`	-	-	Flash
bit 2	U:1	`devEEPROM`	-	-	EEPROM (only supported for protocol versions less than 14.00)
bit 4	U:1	`devSpiFlash`	-	-	SPI Flash (only supported for protocol versions less than 14.00)
End of optional group					

3.10.4 UBX-CFG-DAT (0x06 0x06)

3.10.4.1 Set user-defined datum

Message	**UBX-CFG-DAT** **Set user-defined datum**
Type	Set

CONFIDENTIAL

Comment	**This message is deprecated in protocol versions greater than 23.01. Use** UBX-CFG-VALSET, UBX-CFG-VALGET, UBX-CFG-VALDEL **instead.** See the Legacy UBX Message Fields Reference for the corresponding configuration item.					
Message structure	*Header*	*Class*	*ID*	*Length (Bytes)*	*Payload*	*Checksum*
	0xb5 0x62	0x06	0x06	44	*see below*	CK_A CK_B

Payload description:

Byte offset	*Type*	*Name*	*Scale*	*Unit*	*Description*
0	R8	`majA`	-	m	Semi-major axis (accepted range = 6,300,000.0 to 6,500,000.0 meters).
8	R8	`flat`	-	-	1.0 / flattening (accepted range is 0.0 to 500.0).
16	R4	`dX`	-	m	X axis shift at the origin (accepted range is +/- 5000.0 meters).
20	R4	`dY`	-	m	Y axis shift at the origin (accepted range is +/- 5000.0 meters).
24	R4	`dZ`	-	m	Z axis shift at the origin (accepted range is +/- 5000.0 meters).
28	R4	`rotX`	-	s	Rotation about the X axis (accepted range is +/- 20.0 milli-arc seconds).
32	R4	`rotY`	-	s	Rotation about the Y axis (accepted range is +/- 20.0 milli-arc seconds).
36	R4	`rotZ`	-	s	Rotation about the Z axis (accepted range is +/- 20.0 milli-arc seconds).
40	R4	`scale`	-	ppm	Scale change (accepted range is 0.0 to 50.0 parts per million).

3.10.4.2 The currently defined datum

Message	**UBX-CFG-DAT** **The currently defined datum**					
Type	Get					
Comment	**This message is deprecated in protocol versions greater than 23.01. Use** UBX-CFG-VALSET, UBX-CFG-VALGET, UBX-CFG-VALDEL **instead.** See the Legacy UBX Message Fields Reference for the corresponding configuration item. Returns the parameters of the currently defined datum. If no user-defined datum has been set, this will default to WGS84.					
Message structure	*Header*	*Class*	*ID*	*Length (Bytes)*	*Payload*	*Checksum*
	0xb5 0x62	0x06	0x06	52	*see below*	CK_A CK_B

Payload description:

Byte offset	*Type*	*Name*	*Scale*	*Unit*	*Description*
0	U2	`datumNum`	-	-	Datum number: 0 = WGS84, 0xFFFF = user-defined (extra values are defined for protocol versions less than 13.00)
2	CH[6]	`datumName`	-	-	ASCII string: WGS84 or USER (extra values are defined for protocol versions less than 13.00)
8	R8	`majA`	-	m	Semi-major axis (accepted range = 6,300,000.0 to 6,500,000.0 meters).
16	R8	`flat`	-	-	1.0 / flattening (accepted range is 0.0 to 500.0).
24	R4	`dX`	-	m	X axis shift at the origin (accepted range is +/- 5000.0 meters).

CONFIDENTIAL

28	R4	dY	-	m	Y axis shift at the origin (accepted range is +/- 5000.0 meters).
32	R4	dZ	-	m	Z axis shift at the origin (accepted range is +/- 5000.0 meters).
36	R4	rotX	-	s	Rotation about the X axis (accepted range is +/- 20.0 milli-arc seconds).
40	R4	rotY	-	s	Rotation about the Y axis (accepted range is +/- 20.0 milli-arc seconds).
44	R4	rotZ	-	s	Rotation about the Z axis (accepted range is +/- 20.0 milli-arc seconds).
48	R4	scale	-	ppm	Scale change (accepted range is 0.0 to 50.0 parts per million).

3.10.5 UBX-CFG-GEOFENCE (0x06 0x69)

3.10.5.1 Geofencing configuration

Message	**UBX-CFG-GEOFENCE** **Geofencing configuration**
Type	Get/set
Comment	**This message is deprecated in protocol versions greater than 23.01. Use** UBX-CFG-VALSET, UBX-CFG-VALGET, UBX-CFG-VALDEL **instead.** See the Legacy UBX Message Fields Reference for the corresponding configuration item. Gets or sets the geofencing configuration. If the receiver is sent a valid new configuration, it will respond with a UBX-ACK-ACK message and immediately change to the new configuration. Otherwise the receiver will reject the request, by issuing a UBX-ACK-NAK and continuing operation with the previous configuration. Note that the acknowledge message does not indicate whether the PIO configuration has been successfully applied (pin assigned), it only indicates the successful configuration of the feature. The configured PIO must be previously unoccupied for successful assignment.

Message structure	*Header*	*Class*	*ID*	*Length (Bytes)*	*Payload*	*Checksum*
	0xb5 0x62	0x06	0x69	8 + numFences·12	*see below*	CK_A CK_B

Payload description:

Byte offset	*Type*	*Name*	*Scale*	*Unit*	*Description*
0	U1	version	-	-	Message version (0x00 for this version)
1	U1	numFences	-	-	Number of geofences contained in this message. Note that the receiver can only store a limited number of geofences (currently 4).
2	U1	confLvl	-	-	Required confidence level for state evaluation. This value times the position's standard deviation (sigma) defines the confidence band. • 0 = no confidence required • 1 = 68% • 2 = 95% • 3 = 99.7% • 4 = 99.99%
3	U1	reserved0	-	-	Reserved
4	U1	pioEnabled	-	-	1 = Enable PIO combined fence state output, 0 = disable
5	U1	pinPolarity	-	-	PIO pin polarity. 0 = Low means inside, 1 = Low means outside. Unknown state is always high.
6	U1	pin	-	-	PIO pin number

CONFIDENTIAL

7	U1	reserved1	-	-	Reserved
Start of repeated group (numFences times)					
8 + n·12	I4	lat	1e-7	deg	Latitude of the geofence circle center
12 + n·12	I4	lon	1e-7	deg	Longitude of the geofence circle center
16 + n·12	U4	radius	1e-2	m	Radius of the geofence circle
End of repeated group (numFences times)					

3.10.6 UBX-CFG-GNSS (0x06 0x3e)

3.10.6.1 GNSS system configuration

Message	**UBX-CFG-GNSS** **GNSS system configuration**
Type	Get/set
Comment	**This message is deprecated in protocol versions greater than 23.01. Use** UBX-CFG-VALSET, UBX-CFG-VALGET, UBX-CFG-VALDEL **instead.** See the Legacy UBX Message Fields Reference for the corresponding configuration item. Gets or sets the GNSS system channel sharing configuration. If the receiver is sent a valid new configuration, it will respond with a UBX-ACK-ACK message and immediately change to the new configuration. Otherwise the receiver will reject the request, by issuing a UBX-ACK-NAK and continuing operation with the previous configuration. Configuration requirements: • It is necessary for at least one major GNSS to be enabled, after applying the new configuration to the current one. • It is also required that at least 4 tracking channels are available to each enabled major GNSS, i.e. maxTrkCh must have a minimum value of 4 for each enabled major GNSS. • The number of tracking channels in use must not exceed the number of tracking channels available in hardware, and the sum of all reserved tracking channels needs to be less than or equal to the number of tracking channels in use. Notes: • To avoid cross-correlation issues, it is recommended that GPS and QZSS are always both enabled or both disabled. • Polling this message returns the configuration of all supported GNSS, whether enabled or not; it may also include GNSS unsupported by the particular product, but in such cases the enable flag will always be unset. • See section Satellite Numbering for a description of the GNSS IDs available. • Configuration specific to the GNSS system can be done via other messages (e.g. **UBX-CFG-SBAS**).

Message structure	*Header*	*Class*	*ID*	*Length (Bytes)*	*Payload*	*Checksum*
	0xb5 0x62	0x06	0x3e	4 + numConfigBlocks·8	*see below*	CK_A CK_B

Payload description:

Byte offset	*Type*	*Name*	*Scale*	*Unit*	*Description*
0	U1	msgVer	-	-	Message version (0x00 for this version)
1	U1	numTrkChHw	-	-	Number of tracking channels available in hardware (read only)
2	U1	numTrkChUse	-	-	(Read only for protocol versions greater than 23.00) Number of tracking channels to use. Must be > 0, <= numTrkChHw. If 0xFF, then number of tracking channels to use will be set to numTrkChHw.
3	U1	numConfigBlocks	-	-	Number of configuration blocks following
Start of repeated group (numConfigBlocks times)					
4 + n·8	U1	gnssId	-	-	System identifier (see Satellite Numbering)

CONFIDENTIAL

5 + n·8	U1	`resTrkCh`	-	-	(Read only for protocol versions greater than 23.00) Number of reserved (minimum) tracking channels for this system.
6 + n·8	U1	`maxTrkCh`	-	-	(Read only for protocol versions greater than 23.00) Maximum number of tracking channels used for this system. Must be > 0, >= resTrkChn, <= numTrkChUse and <= maximum number of tracking channels supported for this system.
7 + n·8	U1	`reserved0`	-	-	Reserved
8 + n·8	X4	`flags`	-	-	Bitfield of flags. At least one signal must be configured in every enabled system.
bit 0	$U_{:1}$	`enable`	-	-	Enable this system
bits 23...16	$U_{:8}$	`sigCfgMask`	-	-	Signal configuration mask When gnssId is 0 (GPS) • 0x01 = GPS L1C/A • 0x10 = GPS L2C When gnssId is 1 (SBAS) • 0x01 = SBAS L1C/A When gnssId is 2 (Galileo) • 0x01 = Galileo E1 (not supported for protocol versions less than 18.00) • 0x20 = Galileo E5b When gnssId is 3 (BeiDou) • 0x01 = BeiDou B1I • 0x10 = BeiDou B2I When gnssId is 4 (IMES) • 0x01 = IMES L1 When gnssId is 5 (QZSS) • 0x01 = QZSS L1C/A • 0x04 = QZSS L1S • 0x10 = QZSS L2C When gnssId is 6 (GLONASS) • 0x01 = GLONASS L1 • 0x10 = GLONASS L2
End of repeated group (`numConfigBlocks` times)					

3.10.7 UBX-CFG-INF (0x06 0x02)

3.10.7.1 Poll configuration for one protocol

Message	**UBX-CFG-INF** **Poll configuration for one protocol**					
Type	Poll request					
Comment	**This message is deprecated in protocol versions greater than 23.01. Use** UBX-CFG-VALSET, UBX-CFG-VALGET, UBX-CFG-VALDEL **instead.** See the Legacy UBX Message Fields Reference for the corresponding configuration item.					
Message structure	*Header*	*Class*	*ID*	*Length (Bytes)*	*Payload*	*Checksum*
	0xb5 0x62	0x06	0x02	1	*see below*	CK_A CK_B

Payload description:

Byte offset	*Type*	*Name*	*Scale*	*Unit*	*Description*

CONFIDENTIAL

0	U1	`protocolID`	-	-	Protocol identifier, identifying the output protocol for this poll request. The following are valid protocol identifiers: • 0: UBX protocol • 1: NMEA protocol • 2-255: Reserved

3.10.7.2 Information message configuration

Message	**UBX-CFG-INF** **Information message configuration**					
Type	Get/set					
Comment	**This message is deprecated in protocol versions greater than 23.01. Use** UBX-CFG-VALSET, UBX-CFG-VALGET, UBX-CFG-VALDEL **instead.** The value of infMsgMask[x] below is formed so that each bit represents one of the INF class messages (bit 0 for ERROR, bit 1 for WARNING and so on). For a complete list, see the Message class INF. Several configurations can be concatenated to one input message. In this case the payload length can be a multiple of the normal length. Output messages from the module contain only one configuration unit. Note that: • I/O ports 1 and 2 correspond to serial ports 1 and 2. • I/O port 0 is I2C (DDC). • I/O port 3 is USB. • I/O port 4 is SPI. • I/O port 5 is reserved for future use.					
Message structure	*Header*	*Class*	*ID*	*Length (Bytes)*	*Payload*	*Checksum*
	0xb5 0x62	0x06	0x02	[0..n]·10	*see below*	CK_A CK_B

Payload description:

Byte offset	*Type*	*Name*	*Scale*	*Unit*	*Description*
Start of repeated group (N times)					
0 + n·10	U1	`protocolID`	-	-	Protocol identifier, identifying for which protocol the configuration is set/get. The following are valid protocol identifiers: • 0: UBX protocol • 1: NMEA protocol • 2-255: Reserved
1 + n·10	U1[3]	`reserved0`	-	-	Reserved
4 + n·10	X1[6]	`infMsgMask`	-	-	A bit mask, saying which information messages are enabled on each I/O port
bit 0	$U_{:1}$	`ERROR`	-	-	enable ERROR
bit 1	$U_{:1}$	`WARNING`	-	-	enable WARNING
bit 2	$U_{:1}$	`NOTICE`	-	-	enable NOTICE
bit 3	$U_{:1}$	`TEST`	-	-	enable TEST
bit 4	$U_{:1}$	`DEBUG`	-	-	enable DEBUG
End of repeated group (N times)					

3.10.8 UBX-CFG-ITFM (0x06 0x39)

3.10.8.1 Jamming/interference monitor configuration

Message	**UBX-CFG-ITFM** **Jamming/interference monitor configuration**
Type	Get/set

CONFIDENTIAL

Comment	**This message is deprecated in protocol versions greater than 23.01. Use** UBX-CFG-VALSET, UBX-CFG-VALGET, UBX-CFG-VALDEL **instead.** See the Legacy UBX Message Fields Reference for the corresponding configuration item.

Message structure	*Header*	*Class*	*ID*	*Length (Bytes)*	*Payload*	*Checksum*
	0xb5 0x62	0x06	0x39	8	*see below*	CK_A CK_B

Payload description:

Byte offset	*Type*	*Name*	*Scale*	*Unit*	*Description*
0	X4	`config`	-	-	Interference config word
bits 3...0	$U_{:4}$	`bbThreshold`	-	-	Broadband jamming detection threshold
bits 8...4	$U_{:5}$	`cwThreshold`	-	-	CW jamming detection threshold
bits 30...9	$U_{:22}$	`algorithmBits`	-	-	Reserved algorithm settings - should be set to 0x16B156 in hex for correct settings
bit 31	$U_{:1}$	`enable`	-	-	Enable interference detection
4	X4	`config2`	-	-	Extra settings for jamming/interference monitor
bits 11...0	$U_{:12}$	`generalBits`	-	-	General settings - should be set to 0x31E in hex for correct setting
bits 13...12	$U_{:2}$	`antSetting`	-	-	Antenna setting, 0=unknown, 1=passive, 2=active
bit 14	$U_{:1}$	`enable2`	-	-	Set to 1 to scan auxiliary bands (u-blox 8 / u-blox M8 only, otherwise ignored)

3.10.9 UBX-CFG-LOGFILTER (0x06 0x47)

3.10.9.1 Data logger configuration

Message	**UBX-CFG-LOGFILTER** **Data logger configuration**
Type	Get/set
Comment	**This message is deprecated in protocol versions greater than 23.01. Use** UBX-CFG-VALSET, UBX-CFG-VALGET, UBX-CFG-VALDEL **instead.** See the Legacy UBX Message Fields Reference for the corresponding configuration item. This message can be used to configure the data logger, i.e. to enable/disable the log recording and to get/set the position entry filter settings. Position entries can be filtered based on time difference, position difference or current speed thresholds. Position and speed filtering also have a minimum time interval. A position is logged if any of the thresholds are exceeded. If a threshold is set to zero it is ignored. The maximum rate of position logging is 1 Hz. The filter settings will be configured to the provided values only if the 'applyAllFilterSettings' flag is set. This allows the recording to be enabled/disabled independently of configuring the filter settings. Configuring the data logger in the absence of a logging file is supported. By doing so, once the logging file is created, the data logger configuration will take effect immediately and logging recording and filtering will activate according to the configuration.

Message structure	*Header*	*Class*	*ID*	*Length (Bytes)*	*Payload*	*Checksum*
	0xb5 0x62	0x06	0x47	12	*see below*	CK_A CK_B

Payload description:

Byte offset	*Type*	*Name*	*Scale*	*Unit*	*Description*
0	U1	`version`	-	-	Message version (0x01 for this version)
1	X1	`flags`	-	-	Flags
bit 0	$U_{:1}$	`recordEnabled`	-	-	1 = enable recording, 0 = disable recording
bit 1	$U_{:1}$	`psmOncePer WakupEnabled`	-	-	1 = enable recording only one single position per PSM on/off mode wake-up period, 0 = disable once per wake-up

CONFIDENTIAL

bit 2	U:1	applyAllFilterSettings	-	-	1 = apply all filter settings, 0 = only apply recordEnabled
2	U2	minInterval	-	s	Minimum time interval between logged positions (0 = not set). **This is only applied in combination with the speed and/or position thresholds.** If both minInterval and timeThreshold are set, minInterval must be less than or equal to timeThreshold.
4	U2	timeThreshold	-	s	If the time difference is greater than the threshold, then the position is logged (0 = not set).
6	U2	speedThreshold	-	m/s	If the current speed is greater than the threshold, then the position is logged (0 = not set). minInterval also applies.
8	U4	positionThreshold	-	m	If the 3D position difference is greater than the threshold, then the position is logged (0 = not set). minInterval also applies.

3.10.10 UBX-CFG-MSG (0x06 0x01)

3.10.10.1 Poll a message configuration

Message	**UBX-CFG-MSG** **Poll a message configuration**					
Type	Poll request					
Comment	**This message is deprecated in protocol versions greater than 23.01. Use** UBX-CFG-VALSET, UBX-CFG-VALGET, UBX-CFG-VALDEL **instead.** See the Legacy UBX Message Fields Reference for the corresponding configuration item.					
Message structure	*Header*	*Class*	*ID*	*Length (Bytes)*	*Payload*	*Checksum*
	0xb5 0x62	0x06	0x01	2	*see below*	CK_A CK_B

Payload description:

Byte offset	*Type*	*Name*	*Scale*	*Unit*	*Description*
0	U1	msgClass	-	-	Message class
1	U1	msgID	-	-	Message identifier

3.10.10.2 Set message rate(s)

Message	**UBX-CFG-MSG** **Set message rate(s)**					
Type	Get/set					
Comment	**This message is deprecated in protocol versions greater than 23.01. Use** UBX-CFG-VALSET, UBX-CFG-VALGET, UBX-CFG-VALDEL **instead.** See the Legacy UBX Message Fields Reference for the corresponding configuration item. Get/set message rate configuration (s) to/from the receiver. • Send rate is relative to the event a message is registered on. For example, if the rate of a navigation message is set to 2, the message is sent every second navigation solution. For configuring NMEA messages, the section NMEA Messages Overview describes class and identifier numbers used.					
Message structure	*Header*	*Class*	*ID*	*Length (Bytes)*	*Payload*	*Checksum*
	0xb5 0x62	0x06	0x01	8	*see below*	CK_A CK_B

Payload description:

Byte offset	*Type*	*Name*	*Scale*	*Unit*	*Description*
0	U1	msgClass	-	-	Message class
1	U1	msgID	-	-	Message identifier

CONFIDENTIAL

2	U1[6]	rate	-	-	Send rate on I/O port (6 ports)

3.10.10.3 Set message rate

Message	**UBX-CFG-MSG** **Set message rate**					
Type	Get/set					
Comment	**This message is deprecated in protocol versions greater than 23.01. Use** UBX-CFG-VALSET, UBX-CFG-VALGET, UBX-CFG-VALDEL **instead.** See the Legacy UBX Message Fields Reference for the corresponding configuration item. Set message rate configuration for the current port.					
Message structure	*Header*	*Class*	*ID*	*Length (Bytes)*	*Payload*	*Checksum*
	0xb5 0x62	0x06	0x01	3	*see below*	CK_A CK_B

Payload description:

Byte offset	*Type*	*Name*	*Scale*	*Unit*	*Description*
0	U1	msgClass	-	-	Message class
1	U1	msgID	-	-	Message identifier
2	U1	rate	-	-	Send rate on current port

3.10.11 UBX-CFG-NAV5 (0x06 0x24)

3.10.11.1 Navigation engine settings

Message	**UBX-CFG-NAV5** **Navigation engine settings**					
Type	Get/set					
Comment	**This message is deprecated in protocol versions greater than 23.01. Use** UBX-CFG-VALSET, UBX-CFG-VALGET, UBX-CFG-VALDEL **instead.** See the Legacy UBX Message Fields Reference for the corresponding configuration item.					
Message structure	*Header*	*Class*	*ID*	*Length (Bytes)*	*Payload*	*Checksum*
	0xb5 0x62	0x06	0x24	36	*see below*	CK_A CK_B

Payload description:

Byte offset	*Type*	*Name*	*Scale*	*Unit*	*Description*
0	X2	mask	-	-	Parameters bitmask. Only the masked parameters will be applied.
bit 0	U:1	dyn	-	-	Apply dynamic model settings
bit 1	U:1	minEl	-	-	Apply minimum elevation settings
bit 2	U:1	posFixMode	-	-	Apply fix mode settings
bit 3	U:1	drLim	-	-	Reserved (apply DR limit settings, only applicable for protocol versions less than 14.00)
bit 4	U:1	posMask	-	-	Apply position mask settings
bit 5	U:1	timeMask	-	-	Apply time mask settings
bit 6	U:1	staticHoldMask	-	-	Apply static hold settings
bit 7	U:1	dgpsMask	-	-	Apply DGPS settings (not supported for protocol versions less than 13.00)
bit 8	U:1	cnoThreshold	-	-	Apply CNO threshold settings (cnoThresh, cnoThreshNumSVs) (not supported for protocol versions less than 14.00)

CONFIDENTIAL

bit 9	$U_{:1}$	posAdrMask	-	-	Apply ADR position mask settings (only supported on the ADR product variant) (Not supported for protocol versions less than 15.00)
bit 10	$U_{:1}$	utc	-	-	Apply UTC settings (not supported for protocol versions less than 16.00)
2	U1	dynModel	-	-	Dynamic platform model: • 0 = portable • 2 = stationary • 3 = pedestrian • 4 = automotive • 5 = sea • 6 = airborne with <1g acceleration • 7 = airborne with <2g acceleration • 8 = airborne with <4g acceleration • 9 = wrist-worn watch (not supported for protocol versions less than 18.00) • 10 = bike (supported for protocol versions 19.20)
3	U1	fixMode	-	-	Position fixing mode: • 1 = 2D only • 2 = 3D only • 3 = auto 2D/3D
4	I4	fixedAlt	0.01	m	Fixed altitude (mean sea level) for 2D fix mode
8	U4	fixedAltVar	0.0001	m^2	Fixed altitude variance for 2D mode
12	I1	minElev	-	deg	Minimum elevation for a GNSS satellite to be used in NAV
13	U1	drLimit	-	s	Reserved (maximum time to perform dead reckoning (linear extrapolation) in case of GPS signal loss, only applicable for protocol versions less than 14.00)
14	U2	pDop	0.1	-	Position DOP mask to use
16	U2	tDop	0.1	-	Time DOP mask to use
18	U2	pAcc	-	m	Position accuracy mask
20	U2	tAcc	-	m	Time accuracy mask
22	U1	staticHoldThresh	-	cm/s	Static hold threshold
23	U1	dgnssTimeout	-	s	DGNSS timeout (not supported for protocol versions less than 13.00)
24	U1	cnoThreshNumSVs	-	-	Number of satellites required to have C/N0 above cnoThresh for a fix to be attempted (not supported for protocol versions less than 14.00)
25	U1	cnoThresh	-	dBHz	C/N0 threshold for deciding whether to attempt a fix (not supported for protocol versions less than 14.00)
26	U2	pAccAdr	-	m	ADR position accuracy mask (only supported on the ADR product variant) (not supported for protocol versions less than 15.00)
28	U2	staticHoldMaxDist	-	m	Static hold distance threshold (before quitting static hold) (not supported for protocol versions less than 15.00)

CONFIDENTIAL

30	U1	utcStandard	-	-	UTC standard to be used: • 0 = Automatic; receiver selects based on GNSS configuration (see GNSS time bases) • 3 = UTC as operated by the U.S. Naval Observatory (USNO); derived from GPS time • 5 = UTC as combined from multiple European laboratories; derived from Galileo time • 6 = UTC as operated by the former Soviet Union (SU); derived from GLONASS time • 7 = UTC as operated by the National Time Service Center (NTSC), China; derived from BeiDou time (not supported for protocol versions less than 16.00)
31	U1[5]	reserved0	-	-	Reserved

3.10.12 UBX-CFG-NAVX5 (0x06 0x23)

3.10.12.1 Navigation engine expert settings

Message	**UBX-CFG-NAVX5** **Navigation engine expert settings**					
Type	Get/set					
Comment	**This message is deprecated in protocol versions greater than 23.01. Use** UBX-CFG-VALSET, UBX-CFG-VALGET, UBX-CFG-VALDEL **instead.** See the Legacy UBX Message Fields Reference for the corresponding configuration item.					
Message structure	*Header*	*Class*	*ID*	*Length (Bytes)*	*Payload*	*Checksum*
	0xb5 0x62	0x06	0x23	40	*see below*	CK_A CK_B

Payload description:

Byte offset	*Type*	*Name*	*Scale*	*Unit*	*Description*
0	U2	version	-	-	Message version (0x0002 for this version)
2	X2	mask1	-	-	First parameters bitmask. Only the flagged parameters will be applied, unused bits must be set to 0.
bit 2	U:1	minMax	-	-	1 = apply min/max SVs settings
bit 3	U:1	minCno	-	-	1 = apply minimum C/N0 setting
bit 6	U:1	initial3dfix	-	-	1 = apply initial 3D fix settings
bit 9	U:1	wknRoll	-	-	1 = apply GPS weeknumber rollover settings
bit 10	U:1	ackAid	-	-	1 = apply assistance acknowledgement settings
bit 13	U:1	ppp	-	-	1 = apply usePPP flag
bit 14	U:1	aop	-	-	1 = apply aopCfg (useAOP flag) and aopOrbMaxErr settings (AssistNow Autonomous)
4	X4	mask2	-	-	Second parameters bitmask. Only the flagged parameters will be applied, unused bits must be set to 0.
bit 6	U:1	adr	-	-	Apply ADR/UDR sensor fusion on/off setting (useAdr flag)
bit 7	U:1	sigAttenComp	-	-	Only supported on certain products
8	U1[2]	reserved0	-	-	Reserved
10	U1	minSVs	-	#SVs	Minimum number of satellites for navigation
11	U1	maxSVs	-	#SVs	Maximum number of satellites for navigation
12	U1	minCNO	-	dBHz	Minimum satellite signal level for navigation

CONFIDENTIAL

13	U1	reserved1	-	-	Reserved
14	U1	iniFix3D	-	-	1 = initial fix must be 3D
15	U1[2]	reserved2	-	-	Reserved
17	U1	ackAiding	-	-	1 = issue acknowledgements for assistance message input
18	U2	wknRollover	-	-	GPS week rollover number; GPS week numbers will be set correctly from this week up to 1024 weeks after this week. Setting this to 0 reverts to firmware default.
20	U1	sigAttenComp Mode	-	dBHz	Only supported on certain products
21	U1	reserved3	-	-	Reserved
22	U1[2]	reserved4	-	-	Reserved
24	U1[2]	reserved5	-	-	Reserved
26	U1	usePPP	-	-	1 = use Precise Point Positioning (only available with the PPP product variant)
27	U1	aopCfg	-	-	AssistNow Autonomous configuration
bit 0	U:1	useAOP	-	-	1 = enable AssistNow Autonomous
28	U1[2]	reserved6	-	-	Reserved
30	U2	aopOrbMaxErr	-	m	Maximum acceptable (modeled) AssistNow Autonomous orbit error (valid range = 5..1000, or 0 = reset to firmware default)
32	U1[4]	reserved7	-	-	Reserved
36	U1[3]	reserved8	-	-	Reserved
39	U1	useAdr	-	-	Only supported on certain products

3.10.13 UBX-CFG-NMEA (0x06 0x17)

3.10.13.1 Extended NMEA protocol configuration V1

Message	**UBX-CFG-NMEA** **Extended NMEA protocol configuration V1**					
Type	Get/set					
Comment	**This message is deprecated in protocol versions greater than 23.01. Use** UBX-CFG-VALSET, UBX-CFG-VALGET, UBX-CFG-VALDEL **instead.** Get/set the NMEA protocol configuration. See section NMEA Protocol Configuration for a detailed description of the configuration effects on NMEA output. See the Legacy UBX Message Fields Reference for the corresponding configuration item.					
Message structure	*Header*	*Class*	*ID*	*Length (Bytes)*	*Payload*	*Checksum*
	0xb5 0x62	0x06	0x17	20	*see below*	CK_A CK_B

Payload description:

Byte offset	*Type*	*Name*	*Scale*	*Unit*	*Description*
0	X1	filter	-	-	filter flags
bit 0	U:1	posFilt	-	-	Enable position output for failed or invalid fixes
bit 1	U:1	mskPosFilt	-	-	Enable position output for invalid fixes
bit 2	U:1	timeFilt	-	-	Enable time output for invalid times
bit 3	U:1	dateFilt	-	-	Enable date output for invalid dates
bit 4	U:1	gpsOnlyFilter	-	-	Restrict output to GPS satellites only

CONFIDENTIAL

	bit 5	U:1	trackFilt	-	-	Enable COG output even if COG is frozen
1		U1	nmeaVersion	-	-	• 0x4b = NMEA version 4.11 (not available in all products) • 0x41 = NMEA version 4.10 (not available in all products) • 0x40 = NMEA version 4.0 (not available in all products) • 0x23 = NMEA version 2.3 • 0x21 = NMEA version 2.1
2		U1	numSV	-	-	Maximum number of SVs to report per TalkerId. • 0 = unlimited • 8 = 8 SVs • 12 = 12 SVs • 16 = 16 SVs
3		X1	flags	-	-	flags
	bit 0	U:1	compat	-	-	enable compatibility mode. This might be needed for certain applications when customer's NMEA parser expects a fixed number of digits in position coordinates.
	bit 1	U:1	consider	-	-	enable considering mode.
	bit 2	U:1	limit82	-	-	enable strict limit to 82 characters maximum.
	bit 3	U:1	highPrec	-	-	enable high precision mode. This flag cannot be set in conjunction with either compatibility mode or Limit82 mode (not supported for protocol versions less than 20.01).
4		X4	gnssToFilter	-	-	Filters out satellites based on their GNSS. If a bitfield is enabled, the corresponding satellites will be not output.
	bit 0	U:1	gps	-	-	Disable reporting of GPS satellites
	bit 1	U:1	sbas	-	-	Disable reporting of SBAS satellites
	bit 2	U:1	galileo	-	-	Disable reporting of Galileo satellites
	bit 4	U:1	qzss	-	-	Disable reporting of QZSS satellites
	bit 5	U:1	glonass	-	-	Disable reporting of GLONASS satellites
	bit 6	U:1	beidou	-	-	Disable reporting of BeiDou satellites
8		U1	svNumbering	-	-	Configures the display of satellites that do not have an NMEA-defined value. Note: this does not apply to satellites with an unknown ID. • 0 = Strict - Satellites are not output • 1 = Extended - Use proprietary numbering (see Satellite Numbering)

CONFIDENTIAL

9	U1	`mainTalkerId`	-	-	By default the main Talker ID (i.e. the Talker ID used for all messages other than GSV) is determined by the GNSS assignment of the receiver's channels (see UBX-CFG-GNSS). This field enables the main Talker ID to be overridden. • 0 = Main Talker ID is not overridden • 1 = Set main Talker ID to 'GP' • 2 = Set main Talker ID to 'GL' • 3 = Set main Talker ID to 'GN' • 4 = Set main Talker ID to 'GA' (not supported for protocol versions less than 15.00) • 5 = Set main Talker ID to 'GB' (not supported for protocol versions less than 15.00)
10	U1	`gsvTalkerId`	-	-	By default the Talker ID for GSV messages is GNSS-specific (as defined by NMEA). This field enables the GSV Talker ID to be overridden. • 0 = Use GNSS-specific Talker ID (as defined by NMEA) • 1 = Use the main Talker ID
11	U1	`version`	-	-	Message version (0x01 for this version)
12	CH[2]	`bdsTalkerId`	-	-	Sets the two characters that should be used for the BeiDou Talker ID. If these are set to zero, then the default BeiDou Talker ID will be used.
14	U1[6]	`reserved0`	-	-	Reserved

3.10.14 UBX-CFG-ODO (0x06 0x1e)

3.10.14.1 Odometer, low-speed COG engine settings

Message	**UBX-CFG-ODO** **Odometer, low-speed COG engine settings**
Type	Get/set
Comment	**This message is deprecated in protocol versions greater than 23.01. Use** UBX-CFG-VALSET, UBX-CFG-VALGET, UBX-CFG-VALDEL **instead.** See the Legacy UBX Message Fields Reference for the corresponding configuration item. ☞ This feature is not supported for the FTS product variant.

Message structure	*Header*	*Class*	*ID*	*Length (Bytes)*	*Payload*	*Checksum*
	0xb5 0x62	0x06	0x1e	20	*see below*	CK_A CK_B

Payload description:

Byte offset	*Type*	*Name*	*Scale*	*Unit*	*Description*
0	U1	`version`	-	-	Message version (0x00 for this version)
1	U1[3]	`reserved0`	-	-	Reserved
4	U1	`flags`	-	-	Odometer/Low-speed COG filter flags
bit 0	$U_{:1}$	`useODO`	-	-	Odometer-enabled flag
bit 1	$U_{:1}$	`useCOG`	-	-	Low-speed COG filter enabled flag
bit 2	$U_{:1}$	`outLPVel`	-	-	Output low-pass filtered velocity flag
bit 3	$U_{:1}$	`outLPCog`	-	-	Output low-pass filtered heading (COG) flag
5	X1	`odoCfg`	-	-	Odometer filter settings
bits 2...0	$U_{:3}$	`profile`	-	-	Profile type (0=running, 1=cycling, 2=swimming, 3=car, 4=custom)
6	U1[6]	`reserved1`	-	-	Reserved

CONFIDENTIAL

12	U1	cogMaxSpeed	1e-1	m/s	Speed below which course-over-ground (COG) is computed with the low-speed COG filter
13	U1	cogMaxPosAcc	-	m	Maximum acceptable position accuracy for computing COG with the low-speed COG filter
14	U1[2]	reserved2	-	-	Reserved
16	U1	velLpGain	-	-	Velocity low-pass filter level, range 0..255
17	U1	cogLpGain	-	-	COG low-pass filter level (at speed < 8 m/s), range 0..255
18	U1[2]	reserved3	-	-	Reserved

3.10.15 UBX-CFG-OTP (0x06 0x41)

3.10.15.1 Poll eFuse OTP content

Message	**UBX-CFG-OTP** **Poll eFuse OTP content**					
Type	Poll request					
Comment	See the section eFuse in the Integration manual for details.					
Message structure	*Header*	*Class*	*ID*	*Length (Bytes)*	*Payload*	*Checksum*
	0xb5 0x62	0x06	0x41	0	*see below*	CK_A CK_B
Payload	This message has no payload.					

3.10.15.2 eFuse OTP content

Message	**UBX-CFG-OTP** **eFuse OTP content**					
Type	Get					
Comment	The content of the eFuse OTP, returned as a result of polling the message.					
Message structure	*Header*	*Class*	*ID*	*Length (Bytes)*	*Payload*	*Checksum*
	0xb5 0x62	0x06	0x41	512	*see below*	CK_A CK_B

Payload description:

Byte offset	*Type*	*Name*	*Scale*	*Unit*	*Description*
0	U1[512]	otpContent	-	-	The content of the OTP

3.10.15.3 Write eFuse OTP content

Message	**UBX-CFG-OTP** **Write eFuse OTP content**					
Type	Set					
Comment	Writes content to the eFuse OTP. A UBX-ACK-ACK message will be returned when the content was successfully written, a UBX-ACK-NAK message when there was a problem. See the section eFuse in the Integration manual for details.					
Message structure	*Header*	*Class*	*ID*	*Length (Bytes)*	*Payload*	*Checksum*
	0xb5 0x62	0x06	0x41	[0..n]	*see below*	CK_A CK_B

Payload description:

Byte offset	*Type*	*Name*	*Scale*	*Unit*	*Description*
Start of repeated group (N times)					
0 + n	U1	payload	-	-	Payload. Use u-center to compose the message.
End of repeated group (N times)					

CONFIDENTIAL

3.10.15.4 Write file 0x20: USB vendor ID

Message	**UBX-CFG-OTP** **Write file 0x20: USB vendor ID**						
Type	Set						
Comment	Writes the USB vendor ID to the eFuse OTP. A UBX-ACK-ACK message will be returned when the content was successfully written, a UBX-ACK-NAK message when there was a problem. See the section eFuse OTP in the Integration manual for details.						
Message structure	*Header*	*Class*	*ID*	*Length (Bytes)*		*Payload*	*Checksum*
	0xb5 0x62	0x06	0x41	14		*see below*	CK_A CK_B
Payload description:							
Byte offset	*Type*	*Name*		*Scale*	*Unit*	*Description*	
0	U1	`version`		-	-	Message version (0x04 for this version)	
1	U1	`operation`		-	-	Operation (0x01 for this operation)	
2	U1	`fileID`		-	-	File identifier (0x20 for this file)	
3	U1[11]	`data`		-	-	File data	

3.10.15.5 Write file 0x21: USB vendor string

Message	**UBX-CFG-OTP** **Write file 0x21: USB vendor string**						
Type	Set						
Comment	Writes the USB vendor string to the eFuse OTP. A UBX-ACK-ACK message will be returned when the content was successfully written, a UBX-ACK-NAK message when there was a problem. See the section eFuse OTP in the Integration manual for details.						
Message structure	*Header*	*Class*	*ID*	*Length (Bytes)*		*Payload*	*Checksum*
	0xb5 0x62	0x06	0x41	12 + [0..n]		*see below*	CK_A CK_B
Payload description:							
Byte offset	*Type*	*Name*		*Scale*	*Unit*	*Description*	
0	U1	`version`		-	-	Message version (0x04 for this version)	
1	U1	`operation`		-	-	Operation (0x01 for this operation)	
2	U1	`fileID`		-	-	File identifier (0x21 for this file)	
3	U1[9]	`data`		-	-	File data	
Start of repeated group (N times)							
12 + n	U1	`data2`		-	-	Optional file data	
End of repeated group (N times)							

3.10.15.6 Write file 0x22: USB product ID

Message	**UBX-CFG-OTP** **Write file 0x22: USB product ID**						
Type	Set						
Comment	Writes the USB product ID to the eFuse OTP. A UBX-ACK-ACK message will be returned when the content was successfully written, a UBX-ACK-NAK message when there was a problem. See the section eFuse OTP in the Integration manual for details.						
Message structure	*Header*	*Class*	*ID*	*Length (Bytes)*		*Payload*	*Checksum*
	0xb5 0x62	0x06	0x41	14		*see below*	CK_A CK_B
Payload description:							
Byte offset	*Type*	*Name*		*Scale*	*Unit*	*Description*	

CONFIDENTIAL

0	U1	`version`	-	-	Message version (0x04 for this version)
1	U1	`operation`	-	-	Operation (0x01 for this operation)
2	U1	`fileID`	-	-	File identifier (0x22 for this file)
3	U1[11]	`data`	-	-	File data

3.10.15.7 Write file 0x23: USB product string

Message	**UBX-CFG-OTP** **Write file 0x23: USB product string**						
Type	Set						
Comment	Writes the USB product string to the eFuse OTP. A UBX-ACK-ACK message will be returned when the content was successfully written, a UBX-ACK-NAK message when there was a problem. See the section eFuse OTP in the Integration manual for details.						
Message structure	*Header*	*Class*	*ID*	*Length (Bytes)*		*Payload*	*Checksum*
	0xb5 0x62	0x06	0x41	12 + [0..n]		*see below*	CK_A CK_B
Payload description:							
Byte offset	*Type*	*Name*		*Scale*	*Unit*	*Description*	
0	U1	`version`		-	-	Message version (0x04 for this version)	
1	U1	`operation`		-	-	Operation (0x01 for this operation)	
2	U1	`fileID`		-	-	File identifier (0x23 for this file)	
3	U1[9]	`data`		-	-	File data	
Start of repeated group (N times)							
12 + n	U1	`data2`		-	-	Optional file data	
End of repeated group (N times)							

3.10.15.8 Write file 0x30: receiver configuration

Message	**UBX-CFG-OTP** **Write file 0x30: receiver configuration**						
Type	Set						
Comment	Writes the receiver configuration to the eFuse OTP. A UBX-ACK-ACK message will be returned when the content was successfully written, a UBX-ACK-NAK message when there was a problem. See the section eFuse OTP in the Integration manual for details.						
Message structure	*Header*	*Class*	*ID*	*Length (Bytes)*		*Payload*	*Checksum*
	0xb5 0x62	0x06	0x41	13		*see below*	CK_A CK_B
Payload description:							
Byte offset	*Type*	*Name*		*Scale*	*Unit*	*Description*	
0	U1	`version`		-	-	Message version (0x04 for this version)	
1	U1	`operation`		-	-	Operation (0x01 for this operation)	
2	U1	`fileID`		-	-	File identifier (0x30 for this file)	
3	U1[10]	`data`		-	-	File data	

3.10.15.9 Write file 0x36: oscillator offset calibration

Message	**UBX-CFG-OTP** **Write file 0x36: oscillator offset calibration**
Type	Set
Comment	Writes the oscillator offset calibration to the eFuse OTP. A UBX-ACK-ACK message will be returned when the content was successfully written, a UBX-ACK-NAK message when there was a problem.

CONFIDENTIAL

See the section eFuse OTP in the Integration manual for details.

☞ This message is not applicable to TCXO.

	Header	Class	ID	Length (Bytes)	Payload	Checksum
Message structure	0xb5 0x62	0x06	0x41	17	*see below*	CK_A CK_B

Payload description:

Byte offset	*Type*	*Name*	*Scale*	*Unit*	*Description*
0	U1	`version`	-	-	Message version (0x04 for this version)
1	U1	`operation`	-	-	Operation (0x01 for this operation)
2	U1	`fileID`	-	-	File identifier (0x36 for this file)
3	U1[14]	`data`	-	-	File data

3.10.15.10 Write file 0xa6: host interface signature config

Message	**UBX-CFG-OTP** **Write file 0xa6: host interface signature config**
Type	Set
Comment	Writes the host interface signature configuration for UBX-SEC-ECSIGN to the eFuse OTP. This is the private key to be used for authenticating the receiver message output. A UBX-ACK-ACK message will be returned when the content was successfully written, a UBX-ACK-NAK message when there was a problem. See the section eFuse OTP in the Integration manual for details. See the section *Receiver message authentication* in the Integration manual for details.

	Header	Class	ID	Length (Bytes)	Payload	Checksum
Message structure	0xb5 0x62	0x06	0x41	36	*see below*	CK_A CK_B

Payload description:

Byte offset	*Type*	*Name*	*Scale*	*Unit*	*Description*
0	U1	`version`	-	-	Message version (0x04 for this version)
1	U1	`operation`	-	-	Operation (0x01 for this operation)
2	U1	`fileID`	-	-	File identifier (0xA6 for this file)
3	X1	`lengthMask`	-	-	File length and validity (0x98 for this file)
bits 6...0	$U_{:7}$	`length`	-	-	The length of the file (0x18 for this file)
bit 7	$U_{:1}$	`valid`	-	-	Validity (set to 1)
4	U4	`CRC`	-	-	CRC of the message. Calculate an IEEE-802.3 32bit CRC over the data in the fields version, operation, fileID, lengthMask and privateKey. Initial value (seed): 0xb55db55d. Polynomial: 0x04c11db7. Final XOR value: 0x0. Input and output reflected.
8	U4	`key`	-	-	A key, which protects against accidental changes (set to 0x0512ef28)
12	U1[24]	`privateKey`	-	-	The private key

3.10.16 UBX-CFG-PIO (0x06 0x2c)

3.10.16.1 Set PIO pins

Message	**UBX-CFG-PIO** **Set PIO pins**
Type	Set
Comment	PIO setup for production testing. Request 1 (SET-PIN) will change to a PIO test state and set a desired pin state for PIO pins (except those specified as 'unaltered'). Clearly, PIO settings could disturb system operation

CONFIDENTIAL

or, possibly, even cause damage. Request 0 (EXIT_TEST) will end test state and restore the PIO state back as it was before the most recent change into test state.

An EXIT-TEST message only contains the request, while the other requests contain a value per pin. For a SET-PIN message, this determines the PIO state that will be set.

Message structure	*Header*	*Class*	*ID*	*Length (Bytes)*	*Payload*	*Checksum*
	0xb5 0x62	0x06	0x2c	19	*see below*	CK_A CK_B

Payload description:

Byte offset	*Type*	*Name*	*Scale*	*Unit*	*Description*
0	U1	`version`	-	-	Message version (0x01 for this version)
1	U1	`request`	-	-	Possible requests: • 0: EXIT-TEST. No test, back to normal operation • 1: SET-PIN. Set pin state (unaltered, float, high, low, pull-up)
Start of repeated group (17 times)					
2 + n	U1	`requiredPinState`	-	-	One value per PIO pin: • 0: Pin state unaltered • 4: Pin driven high • 5: Pin driven low
End of repeated group (17 times)					

3.10.17 UBX-CFG-PM2 (0x06 0x3b)

3.10.17.1 Extended power management configuration

Message	**UBX-CFG-PM2** **Extended power management configuration**
Type	Get/set
Comment	**This message is deprecated in protocol versions greater than 23.01. Use** UBX-CFG-VALSET, UBX-CFG-VALGET, UBX-CFG-VALDEL **instead.** See the section Power management in the Integration manual for more information about the fields. ☞ This feature is not supported for either the ADR or FTS products.

Message structure	*Header*	*Class*	*ID*	*Length (Bytes)*	*Payload*	*Checksum*
	0xb5 0x62	0x06	0x3b	48	*see below*	CK_A CK_B

Payload description:

Byte offset	*Type*	*Name*	*Scale*	*Unit*	*Description*
0	U1	`version`	-	-	Message version (0x02 for this version) Note: the message version number is the same as for protocol versions 18 up to 22; please select correct message version based on the protocol version supported by your firmware.
1	U1	`reserved0`	-	-	Reserved
2	U1	`maxStartupStateDur`	-	s	Maximum time to spend in Acquisition state. If 0: bound disabled.
3	U1	`reserved1`	-	-	Reserved
4	X4	`flags`	-	-	PSM configuration flags
bits 3...1	U:3	`optTarget`	-	-	Optimization target (not supported for protocol versions 32.00+) • 000 performance (default) • 001 power save • 010 reserved • 011 reserved

CONFIDENTIAL

					• 100 reserved • 101 reserved • 110 reserved • 111 reserved
bit 4	U:1	extintSel	-	-	EXTINT pin select • 0 EXTINT0 • 1 EXTINT1
bit 5	U:1	extintWake	-	-	EXTINT pin control • 0 disabled • 1 enabled, keep receiver awake as long as selected EXTINT pin is 'high'
bit 6	U:1	extintBackup	-	-	EXTINT pin control • 0 disabled • 1 enabled, force receiver into BACKUP mode when selected EXTINT pin is 'low'
bit 7	U:1	extintInactive	-	-	EXTINT pin control • 0 disabled • 1 enabled, force backup in case EXTINT pin is inactive for time longer than extintIncactivityMs
bits 9...8	U:2	limitPeakCurr	-	-	Limit peak current • 00 disabled • 01 enabled, peak current is limited • 10 reserved • 11 reserved
bit 10	U:1	waitTimeFix	-	-	Wait for Timefix • 0 wait for normal fix OK before starting on time • 1 wait for time fix OK before starting on time
bit 11	U:1	updateRTC	-	-	Update real time clock • 0 do not wake up to update RTC. RTC is updated during normal on-time. • 1 update RTC. The receiver adds extra wake-up cycles to update the RTC. (not supported for protocol versions 23.00 to 23.01, and 32.00+)
bit 12	U:1	updateEPH	-	-	Update ephemeris • 0 do not wake up to update Ephemeris data • 1 update Ephemeris. The receiver adds extra wake-up cycles to update the Ephemeris data.
bit 16	U:1	doNotEnterOff	-	-	Behavior of receiver in case of no fix • 0 receiver enters (Inactive) Awaiting next search state • 1 receiver does not enter (Inactive) Awaiting next search state but keeps trying to acquire a fix instead
bits 18...17	U:2	mode	-	-	Mode of operation • 00 ON/OFF operation • 01 cyclic tracking operation • 10 reserved • 11 reserved
8	U4	updatePeriod	-	ms	Position update period. If set to 0, the receiver will never retry a fix and it will wait for external events (only affects the update period in ON/OFF operation for protocol versions 32.00+).
12	U4	searchPeriod	-	ms	Acquisition retry period if previously failed. If set to 0, the receiver will never retry a startup.

CONFIDENTIAL

16	U4	gridOffset	-	ms	Grid offset relative to GPS start of week
20	U2	onTime	-	s	Time to stay in Tracking state
22	U2	minAcqTime	-	s	Minimal search time
24	U1[20]	reserved2	-	-	Reserved
44	U4	extint InactivityMs	-	ms	inactivity time out on EXTINT pin if enabled

3.10.18 UBX-CFG-PMS (0x06 0x86)

3.10.18.1 Power mode setup

Message	**UBX-CFG-PMS** **Power mode setup**					
Type	Get/set					
Comment	**This message is deprecated in protocol versions greater than 23.01. Use** UBX-CFG-VALSET, UBX-CFG-VALGET, UBX-CFG-VALDEL **instead.**					
Message structure	*Header*	*Class*	*ID*	*Length (Bytes)*	*Payload*	*Checksum*
	0xb5 0x62	0x06	0x86	8	*see below*	CK_A CK_B

Payload description:

Byte offset	*Type*	*Name*	*Scale*	*Unit*	*Description*
0	U1	version	-	-	Message version (0x00 for this version)
1	U1	powerSetup Value	-	-	Power setup value 0x00 = Full power 0x01 = Balanced 0x02 = Interval 0x03 = Aggressive with 1 Hz 0x04 = Aggressive with 2 Hz 0x05 = Aggressive with 4 Hz (not supported for protocol versions 32.00+) 0xFF = Invalid (only when polling)
2	U2	period	-	s	Position update period and search period. Recommended minimum period is 10 s, although the receiver accepts any value bigger than 5 s. Only valid when powerSetupValue set to Interval, otherwise must be set to '0'.
4	U2	onTime	-	s	Duration of the ON phase, must be smaller than the period. Only valid when powerSetupValue set to Interval, otherwise must be set to '0'.
6	U1[2]	reserved0	-	-	Reserved

3.10.19 UBX-CFG-PRT (0x06 0x00)

3.10.19.1 Polls the configuration for one I/O port

Message	**UBX-CFG-PRT** **Polls the configuration for one I/O port**
Type	Poll request
Comment	**This message is deprecated in protocol versions greater than 23.01. Use** UBX-CFG-VALSET, UBX-CFG-VALGET, UBX-CFG-VALDEL **instead.**

CONFIDENTIAL

See the Legacy UBX Message Fields Reference for the corresponding configuration item.

Sending this message with a port ID as payload results in having the receiver return the configuration for the specified port.

	Header	Class	ID	Length (Bytes)	Payload	Checksum
Message structure	0xb5 0x62	0x06	0x00	1	*see below*	CK_A CK_B

Payload description:

Byte offset	*Type*	*Name*	*Scale*	*Unit*	*Description*
0	U1	`PortID`	-	-	Port identifier number (see the other versions of CFG-PRT for valid values)

3.10.19.2 Port configuration for UART ports

Message	**UBX-CFG-PRT** **Port configuration for UART ports**
Type	Get/set
Comment	**This message is deprecated in protocol versions greater than 23.01. Use** UBX-CFG-VALSET, UBX-CFG-VALGET, UBX-CFG-VALDEL **instead.** See the Legacy UBX Message Fields Reference for the corresponding configuration item. Several configurations can be concatenated to one input message. In this case the payload length can be a multiple of the normal length (see the other versions of CFG-PRT). Output messages from the module contain only one configuration unit. Note that this message can affect baud rate and other transmission parameters. Because there may be messages queued for transmission there may be uncertainty about which protocol applies to such messages. In addition a message currently in transmission may be corrupted by a protocol change. Host data reception parameters may have to be changed to be able to receive future messages, including the acknowledge message resulting from the CFG-PRT message.

	Header	Class	ID	Length (Bytes)	Payload	Checksum
Message structure	0xb5 0x62	0x06	0x00	20	*see below*	CK_A CK_B

Payload description:

Byte offset	*Type*	*Name*	*Scale*	*Unit*	*Description*
0	U1	`portID`	-	-	Port identifier number (see Integration manual for valid UART port IDs)
1	U1	`reserved0`	-	-	Reserved
2	X2	`txReady`	-	-	TX ready PIN configuration (not supported for protocol versions less than 13.01)
bit 0	$U_{:1}$	`en`	-	-	Enable TX ready feature for this port
bit 1	$U_{:1}$	`pol`	-	-	Polarity • 0 High-active • 1 Low-active
bits 6...2	$U_{:5}$	`pin`	-	-	PIO to be used (must not be in use by another function)
bits 15...7	$U_{:9}$	`thres`	-	-	Threshold The given threshold is multiplied by 8 bytes. The TX ready PIN goes active after >= thres*8 bytes are pending for the port and going inactive after the last pending bytes have been written to hardware (0-4 bytes before end of stream). • 0x000 no threshold • 0x001 8byte • 0x002 16byte • ... • 0x1FE 4080byte • 0x1FF 4088byte

CONFIDENTIAL

4	X4	mode	-	-	A bit mask describing the UART mode
bits 7...6	U:2	charLen	-	-	Character length • 00 5bit (not supported) • 01 6bit (not supported) • 10 7bit (supported only with parity) • 11 8bit
bits 11...9	U:3	parity	-	-	• 000 Even parity • 001 Odd parity • 10X No parity • X1X Reserved
bits 13...12	U:2	nStopBits	-	-	Number of Stop bits • 00 1 Stop bit • 01 1.5 Stop bit • 10 2 Stop bit • 11 0.5 Stop bit
8	U4	baudRate	-	Bits/s	Baud rate in bits/second
12	X2	inProtoMask	-	-	A mask describing which input protocols are active. Each bit of this mask is used for a protocol. Through that, multiple protocols can be defined on a single port.
bit 0	U:1	inUbx	-	-	UBX protocol
bit 1	U:1	inNmea	-	-	NMEA protocol
bit 2	U:1	inRtcm	-	-	RTCM2 protocol
bit 5	U:1	inRtcm3	-	-	RTCM3 protocol (not supported for protocol versions less than 20.00)
14	X2	outProtoMask	-	-	A mask describing which output protocols are active. Each bit of this mask is used for a protocol. Through that, multiple protocols can be defined on a single port.
bit 0	U:1	outUbx	-	-	UBX protocol
bit 1	U:1	outNmea	-	-	NMEA protocol
bit 5	U:1	outRtcm3	-	-	RTCM3 protocol (not supported for protocol versions less than 20.00)
16	X2	flags	-	-	Flags bit mask
bit 1	U:1	extendedTx Timeout	-	-	Extended TX timeout: if set, the port will time out if allocated TX memory >=4 kB and no activity for 1.5 s. If not set the port will time out if no activity for 1.5 s regardless on the amount of allocated TX memory (not supported for protocol versions less than 13.01).
18	U1[2]	reserved1	-	-	Reserved

3.10.19.3 Port configuration for USB port

Message	**UBX-CFG-PRT** **Port configuration for USB port**
Type	Get/set
Comment	**This message is deprecated in protocol versions greater than 23.01. Use** UBX-CFG-VALSET, UBX-CFG-VALGET, UBX-CFG-VALDEL **instead.** See the Legacy UBX Message Fields Reference for the corresponding configuration item. Several configurations can be concatenated to one input message. In this case the payload length can be a multiple of the normal length (see the other versions of CFG-PRT). Output messages from the module contain only one configuration unit.

CONFIDENTIAL

Message structure	Header	Class	ID	Length (Bytes)	Payload	Checksum
	0xb5 0x62	0x06	0x00	20	see below	CK_A CK_B

Payload description:

Byte offset	Type	Name	Scale	Unit	Description
0	U1	portID	-	-	Port identifier number (= 3 for USB port)
1	U1	reserved0	-	-	Reserved
2	X2	txReady	-	-	TX ready PIN configuration (not supported for protocol versions less than 13.01)
bit 0	U:1	en	-	-	Enable TX ready feature for this port
bit 1	U:1	pol	-	-	Polarity • 0 High-active • 1 Low-active
bits 6...2	U:5	pin	-	-	PIO to be used (must not be in use by another function)
bits 15...7	U:9	thres	-	-	Threshold The given threshold is multiplied by 8 bytes. The TX ready PIN goes active after >= thres*8 bytes are pending for the port and going inactive after the last pending bytes have been written to hardware (0-4 bytes before end of stream). • 0x000 no threshold • 0x001 8byte • 0x002 16byte • ... • 0x1FE 4080byte • 0x1FF 4088byte
4	U1[8]	reserved1	-	-	Reserved
12	X2	inProtoMask	-	-	A mask describing which input protocols are active. Each bit of this mask is used for a protocol. Through that, multiple protocols can be defined on a single port.
bit 0	U:1	inUbx	-	-	UBX protocol
bit 1	U:1	inNmea	-	-	NMEA protocol
bit 2	U:1	inRtcm	-	-	RTCM2 protocol
bit 5	U:1	inRtcm3	-	-	RTCM3 protocol (not supported for protocol versions less than 20.00)
14	X2	outProtoMask	-	-	A mask describing which output protocols are active. Each bit of this mask is used for a protocol. Through that, multiple protocols can be defined on a single port.
bit 0	U:1	outUbx	-	-	UBX protocol
bit 1	U:1	outNmea	-	-	NMEA protocol
bit 5	U:1	outRtcm3	-	-	RTCM3 protocol (not supported for protocol versions less than 20.00)
16	U1[2]	reserved2	-	-	Reserved
18	U1[2]	reserved3	-	-	Reserved

3.10.19.4 Port configuration for SPI port

Message	**UBX-CFG-PRT** **Port configuration for SPI port**
Type	Get/set

CONFIDENTIAL

Comment	**This message is deprecated in protocol versions greater than 23.01. Use** UBX-CFG-VALSET, UBX-CFG-VALGET, UBX-CFG-VALDEL **instead.** See the Legacy UBX Message Fields Reference for the corresponding configuration item. Several configurations can be concatenated to one input message. In this case the payload length can be a multiple of the normal length (see the other versions of CFG-PRT). Output messages from the module contain only one configuration unit.

Message structure	*Header*	*Class*	*ID*	*Length (Bytes)*	*Payload*	*Checksum*
	0xb5 0x62	0x06	0x00	20	*see below*	CK_A CK_B

Payload description:

Byte offset	*Type*	*Name*	*Scale*	*Unit*	*Description*
0	U1	`portID`	-	-	Port identifier number (= 4 for SPI port)
1	U1	`reserved0`	-	-	Reserved
2	X2	`txReady`	-	-	TX ready PIN configuration (not supported for protocol versions less than 13.01)
bit 0	$U_{:1}$	`en`	-	-	Enable TX ready feature for this port
bit 1	$U_{:1}$	`pol`	-	-	Polarity • 0 High-active • 1 Low-active
bits 6...2	$U_{:5}$	`pin`	-	-	PIO to be used (must not be in use by another function)
bits 15...7	$U_{:9}$	`thres`	-	-	Threshold The given threshold is multiplied by 8 bytes. The TX ready PIN goes active after >= thres*8 bytes are pending for the port and going inactive after the last pending bytes have been written to hardware (0-4 bytes before end of stream). • 0x000 no threshold • 0x001 8byte • 0x002 16byte • ... • 0x1FE 4080byte • 0x1FF 4088byte
4	X4	`mode`	-	-	SPI Mode Flags
bits 2...1	$U_{:2}$	`spiMode`	-	-	• 00 SPI Mode 0: CPOL = 0, CPHA = 0 • 01 SPI Mode 1: CPOL = 0, CPHA = 1 • 10 SPI Mode 2: CPOL = 1, CPHA = 0 • 11 SPI Mode 3: CPOL = 1, CPHA = 1
bits 13...8	$U_{:6}$	`ffCnt`	-	-	Number of bytes containing 0xFF to receive before switching off reception. Range: 0 (mechanism off) - 63
8	U1[4]	`reserved1`	-	-	Reserved
12	X2	`inProtoMask`	-	-	A mask describing which input protocols are active. Each bit of this mask is used for a protocol. Through that, multiple protocols can be defined on a single port. (The bitfield inRtcm3 is not supported for protocol versions less than 20.00)
bit 0	$U_{:1}$	`inUbx`	-	-	
bit 1	$U_{:1}$	`inNmea`	-	-	
bit 2	$U_{:1}$	`inRtcm`	-	-	
bit 5	$U_{:1}$	`inRtcm3`	-	-	

CONFIDENTIAL

14	X2	outProtoMask	-	-	A mask describing which output protocols are active. Each bit of this mask is used for a protocol. Through that, multiple protocols can be defined on a single port. (The bitfield outRtcm3 is not supported for protocol versions less than 20.00)
bit 0	U:1	outUbx	-	-	
bit 1	U:1	outNmea	-	-	
bit 5	U:1	outRtcm3	-	-	
16	X2	flags	-	-	Flags bit mask
bit 1	U:1	extendedTx Timeout	-	-	Extended TX timeout: if set, the port will time out if allocated TX memory >=4 kB and no activity for 1.5 s. (not supported for protocol versions less than 13.01)
18	U1[2]	reserved2	-	-	Reserved

3.10.19.5 Port configuration for I2C (DDC) port

Message	**UBX-CFG-PRT** **Port configuration for I2C (DDC) port**
Type	Get/set
Comment	**This message is deprecated in protocol versions greater than 23.01. Use** UBX-CFG-VALSET, UBX-CFG-VALGET, UBX-CFG-VALDEL **instead.** See the Legacy UBX Message Fields Reference for the corresponding configuration item. Several configurations can be concatenated to one input message. In this case the payload length can be a multiple of the normal length (see the other versions of CFG-PRT). Output messages from the module contain only one configuration unit.

Message structure	*Header*	*Class*	*ID*	*Length (Bytes)*	*Payload*	*Checksum*
	0xb5 0x62	0x06	0x00	20	*see below*	CK_A CK_B

Payload description:

Byte offset	*Type*	*Name*	*Scale*	*Unit*	*Description*
0	U1	portID	-	-	Port identifier number (= 0 for I2C (DDC) port)
1	U1	reserved0	-	-	Reserved
2	X2	txReady	-	-	TX ready PIN configuration (not supported for protocol versions less than 13.01)
bit 0	U:1	en	-	-	Enable TX ready feature for this port
bit 1	U:1	pol	-	-	Polarity • 0 High-active • 1 Low-active
bits 6...2	U:5	pin	-	-	PIO to be used (must not be in use by another function)
bits 15...7	U:9	thres	-	-	Threshold The given threshold is multiplied by 8 bytes. The TX ready PIN goes active after >= thres*8 bytes are pending for the port and going inactive after the last pending bytes have been written to hardware (0-4 bytes before end of stream). • 0x000 no threshold • 0x001 8byte • 0x002 16byte • ... • 0x1FE 4080byte • 0x1FF 4088byte
4	X4	mode	-	-	I2C (DDC) Mode Flags

CONFIDENTIAL

	bits 7...1	U:7	slaveAddr	-	-	Slave address Range: 0x07 < slaveAddr < 0x78. Bit 0 must be 0
8		U1[4]	reserved1	-	-	Reserved
12		X2	inProtoMask	-	-	A mask describing which input protocols are active. Each bit of this mask is used for a protocol. Through that, multiple protocols can be defined on a single port. (The bitfield inRtcm3 is not supported for protocol versions less than 20.00)
	bit 0	U:1	inUbx	-	-	
	bit 1	U:1	inNmea	-	-	
	bit 2	U:1	inRtcm	-	-	
	bit 5	U:1	inRtcm3	-	-	
14		X2	outProtoMask	-	-	A mask describing which output protocols are active. Each bit of this mask is used for a protocol. Through that, multiple protocols can be defined on a single port. (The bitfield outRtcm3 is not supported for protocol versions less than 20.00)
	bit 0	U:1	outUbx	-	-	
	bit 1	U:1	outNmea	-	-	
	bit 5	U:1	outRtcm3	-	-	
16		X2	flags	-	-	Flags bit mask
	bit 1	U:1	extendedTx Timeout	-	-	Extended TX timeout: if set, the port will time out if allocated TX memory >=4 kB and no activity for 1.5 s (not supported for protocol versions less than 13.01).
18		U1[2]	reserved2	-	-	Reserved

3.10.20 UBX-CFG-PT2 (0x06 0x59)

3.10.20.1 Production test configuration

Message	**UBX-CFG-PT2** **Production test configuration**					
Type	Set					
Comment	Activate and set configuration for Production test mode. This allows setting a variable number of SV signal descriptors (no more than the number of RF channels of the receiver). Activating also enables output message UBX-MON-PT2.					
Message structure	*Header*	*Class*	*ID*	*Length (Bytes)*	*Payload*	*Checksum*
	0xb5 0x62	0x06	0x59	12 + [0..n]·4	*see below*	CK_A CK_B

Payload description:

Byte offset	*Type*	*Name*	*Scale*	*Unit*	*Description*
0	U1	version	-	-	Message version (0x00 for this version)
1	X1	activate	-	-	Production test mode
bit 0	U:1	enable	-	-	1=activate test mode, 0=deactivate test mode
bits 7...6	U:2	lnaMode	-	-	Internal LNA Mode • 0x00=Use default internal LNA settings • 0x01=Switch internal LNA off • 0x02=Switch internal LNA on
2	U1	extint	-	-	Input pin for the optional frequency aiding • 0x00=EXTINT0

CONFIDENTIAL

					• 0x01=EXTINT1 • 0xFF=no frequency aiding
3	U1	`reAcqCno`	-	dBHz	C/N0 threshold to force re-acquisition (=0 means inactive)
4	U4	`refFreq`	-	Hz	Reference frequency
8	U4	`refFreqAcc`	-	ppb	Reference frequency accuracy
Start of repeated group (N times)					
12 + n·4	U1	`gnssId`	-	-	GNSS identifier (see Satellite Numbering)
13 + n·4	U1	`svId`	-	-	Satellite identifier (see Satellite Numbering)
14 + n·4	U1	`sigId`	-	-	Signal identifier. 0 is the only value currently supported.
15 + n·4	U1	`accsId`	-	-	Access identifier, used to select frequency channel in range (0-13) for GLONASS (0 = -7, 1 = -6, ..., 12 = +5, 13 = +6). Ignored for all other GNSS.
End of repeated group (N times)					

3.10.21 UBX-CFG-PWR (0x06 0x57)

3.10.21.1 Put receiver in a defined power state

Message	**UBX-CFG-PWR** **Put receiver in a defined power state**					
Type	Set					
Comment	☞ This message is deprecated in protocol versions greater than 17. Use UBX-CFG-RST for GNSS start/stop and UBX-RXM-PMREQ for software backup.					
Message structure	*Header*	*Class*	*ID*	*Length (Bytes)*	*Payload*	*Checksum*
	0xb5 0x62	0x06	0x57	8	*see below*	CK_A CK_B

Payload description:

Byte offset	*Type*	*Name*	*Scale*	*Unit*	*Description*
0	U1	`version`	-	-	Message version (0x01 for this version)
1	U1[3]	`reserved0`	-	-	Reserved
4	U4	`state`	-	-	Enter system state • 0x52554E20 = GNSS running • 0x53544F50 = GNSS stopped • 0x42434B50 = Software backup. USB interface will be disabled, other wakeup source is needed.

3.10.22 UBX-CFG-RATE (0x06 0x08)

3.10.22.1 Navigation/measurement rate settings

Message	**UBX-CFG-RATE** **Navigation/measurement rate settings**
Type	Get/set
Comment	**This message is deprecated in protocol versions greater than 23.01. Use** UBX-CFG-VALSET, UBX-CFG-VALGET, UBX-CFG-VALDEL **instead.** See the Legacy UBX Message Fields Reference for the corresponding configuration item. This message allows the user to alter the rate at which navigation solutions (and the measurements that they depend on) are generated by the receiver. The calculation of the navigation solution will always be aligned to the top of a second zero (first second of the week) of the configured reference time system. (Navigation period is an integer multiple of the measurement period for protocol versions greater than 17.00).

CONFIDENTIAL

- Each measurement triggers the measurements generation and, if available, raw data output.
- The navRate value defines that every nth measurement triggers a navigation epoch.
- The update rate has a direct influence on the power consumption. The more fixes that are required, the more CPU power and communication resources are required.
- For most applications a 1 Hz update rate would be sufficient.
- When using power save mode, measurement and navigation rate can differ from the values configured here.

Message structure	*Header*	*Class*	*ID*	*Length (Bytes)*	*Payload*	*Checksum*
	0xb5 0x62	0x06	0x08	6	*see below*	CK_A CK_B

Payload description:

Byte offset	*Type*	*Name*	*Scale*	*Unit*	*Description*
0	U2	`measRate`	-	ms	The elapsed time between GNSS measurements, which defines the rate, e.g. 100 ms => 10 Hz, 1000 ms => 1 Hz, 10000 ms => 0.1 Hz. Measurement rate should be greater than or equal to 25 ms. (Measurement rate should be greater than or equal to 50 ms for protocol versions less than 24.00).
2	U2	`navRate`	-	cycles	The ratio between the number of measurements and the number of navigation solutions, e.g. 5 means five measurements for every navigation solution. Maximum value is 127. (This parameter is ignored and the navRate is fixed to 1 for protocol versions less than 18.00).
4	U2	`timeRef`	-	-	The time system to which measurements are aligned: • 0 = UTC time • 1 = GPS time • 2 = GLONASS time (not supported for protocol versions less than 18.00) • 3 = BeiDou time (not supported for protocol versions less than 18.00) • 4 = Galileo time (not supported for protocol versions less than 18.00)

3.10.23 UBX-CFG-RINV (0x06 0x34)

3.10.23.1 Contents of remote inventory

Message	**UBX-CFG-RINV** **Contents of remote inventory**
Type	Get/set
Comment	**This message is deprecated in protocol versions greater than 23.01. Use** UBX-CFG-VALSET, UBX-CFG-VALGET, UBX-CFG-VALDEL **instead.** If *N* is greater than 30, the excess bytes are discarded. See the Legacy UBX Message Fields Reference for the corresponding configuration item.

Message structure	*Header*	*Class*	*ID*	*Length (Bytes)*	*Payload*	*Checksum*
	0xb5 0x62	0x06	0x34	1 + [0..n]	*see below*	CK_A CK_B

Payload description:

Byte offset	*Type*	*Name*	*Scale*	*Unit*	*Description*
0	X1	`flags`	-	-	Flags
bit 0	U:1	`dump`	-	-	Dump data at startup. Does not work if flag `binary` is set.
bit 1	U:1	`binary`	-	-	Data is binary.
Start of repeated group (N times)					

CONFIDENTIAL

1 + n	U1	data	-	-	Data to store/stored in remote inventory.
End of repeated group (N times)					

3.10.24 UBX-CFG-RST (0x06 0x04)

3.10.24.1 Reset receiver / clear backup data structures

Message	**UBX-CFG-RST** **Reset receiver / clear backup data structures**					
Type	Command					
Comment	Do not expect this message to be acknowledged by the receiver. • Newer FW version will not acknowledge this message at all. • Older FW version will acknowledge this message but the acknowledge may not be sent completely before the receiver is reset.					
Message structure	*Header*	*Class*	*ID*	*Length (Bytes)*	*Payload*	*Checksum*
	0xb5 0x62	0x06	0x04	4	*see below*	CK_A CK_B

Payload description:

Byte offset	*Type*	*Name*	*Scale*	*Unit*	*Description*
0	X2	navBbrMask	-	-	BBR sections to clear. The following special sets apply: • 0x0000 Hot start • 0x0001 Warm start • 0xFFFF Cold start
bit 0	U:1	eph	-	-	Ephemeris
bit 1	U:1	alm	-	-	Almanac
bit 2	U:1	health	-	-	Health
bit 3	U:1	klob	-	-	Klobuchar parameters
bit 4	U:1	pos	-	-	Position
bit 5	U:1	clkd	-	-	Clock drift
bit 6	U:1	osc	-	-	Oscillator parameter
bit 7	U:1	utc	-	-	UTC correction + GPS leap seconds parameters
bit 8	U:1	rtc	-	-	RTC
bit 11	U:1	sfdr	-	-	SFDR parameters (only available on the ADR product variant)
bit 12	U:1	vmon	-	-	SFDR vehicle monitoring parameter (only available on the ADR product variant)
bit 13	U:1	tct	-	-	TCT parameters (only available on the ADR product variant)
bit 15	U:1	aop	-	-	Autonomous orbit parameters
2	U1	resetMode	-	-	Reset Type • 0x00 = Hardware reset (watchdog) immediately • 0x01 = Controlled software reset • 0x02 = Controlled software reset (GNSS only) • 0x04 = Hardware reset (watchdog) after shutdown • 0x08 = Controlled GNSS stop • 0x09 = Controlled GNSS start
3	U1	reserved0	-	-	Reserved

3.10.25 UBX-CFG-RXM (0x06 0x11)

CONFIDENTIAL

3.10.25.1 RXM configuration

Message	**UBX-CFG-RXM** **RXM configuration**					
Type	Get/set					
Comment	For a detailed description see section Power Management.					
Message structure	*Header*	*Class*	*ID*	*Length (Bytes)*	*Payload*	*Checksum*
	0xb5 0x62	0x06	0x11	2	*see below*	CK_A CK_B

Payload description:

Byte offset	*Type*	*Name*	*Scale*	*Unit*	*Description*
0	U1	`reserved0`	-	-	Reserved
1	U1	`lpMode`	-	-	Low power mode • 0 = Continuous mode • 1 = Power save mode • 4 = Continuous mode

3.10.26 UBX-CFG-SBAS (0x06 0x16)

3.10.26.1 SBAS configuration

Message	**UBX-CFG-SBAS** **SBAS configuration**					
Type	Get/set					
Comment	**This message is deprecated in protocol versions greater than 23.01. Use** UBX-CFG-VALSET, UBX-CFG-VALGET, UBX-CFG-VALDEL **instead.** This message configures the SBAS receiver subsystem (i.e. WAAS, EGNOS, MSAS). See the SBAS configuration settings description in the Integration manual for a detailed description of how these settings affect receiver operation.					
Message structure	*Header*	*Class*	*ID*	*Length (Bytes)*	*Payload*	*Checksum*
	0xb5 0x62	0x06	0x16	8	*see below*	CK_A CK_B

Payload description:

Byte offset	*Type*	*Name*	*Scale*	*Unit*	*Description*
0	X1	`mode`	-	-	SBAS mode
bit 0	U:1	`enabled`	-	-	SBAS enabled (1) / disabled (0) - This field is deprecated; use UBX-CFG-GNSS to enable/disable SBAS operation
bit 1	U:1	`test`	-	-	SBAS testbed: Use data anyhow (1) / Ignore data when in test mode (SBAS msg 0)
1	X1	`usage`	-	-	SBAS usage
bit 0	U:1	`range`	-	-	Use SBAS GEOs as a ranging source (for navigation)
bit 1	U:1	`diffCorr`	-	-	Use SBAS differential corrections
bit 2	U:1	`integrity`	-	-	Use SBAS integrity information
2	U1	`maxSBAS`	-	-	Maximum number of SBAS prioritized tracking channels (valid range: 0 - 3) to use (obsolete and superseded by UBX-CFG-GNSS for protocol versions 14.00+).
3	X1	`scanmode2`	-	-	Continuation of scanmode bitmask below
bit 0	U:1	`PRN152`	-	-	
bit 1	U:1	`PRN153`	-	-	

CONFIDENTIAL

	bit 2	U:1	PRN154	-	-	
	bit 3	U:1	PRN155	-	-	
	bit 4	U:1	PRN156	-	-	
	bit 5	U:1	PRN157	-	-	
	bit 6	U:1	PRN158	-	-	
4		X4	scanmode1	-	-	Which SBAS PRN numbers to search for (bitmask). If all bits are set to zero, auto-scan (i.e. all valid PRNs) are searched. Every bit corresponds to a PRN number.
	bit 0	U:1	PRN120	-	-	
	bit 1	U:1	PRN121	-	-	
	bit 2	U:1	PRN122	-	-	
	bit 3	U:1	PRN123	-	-	
	bit 4	U:1	PRN124	-	-	
	bit 5	U:1	PRN125	-	-	
	bit 6	U:1	PRN126	-	-	
	bit 7	U:1	PRN127	-	-	
	bit 8	U:1	PRN128	-	-	
	bit 9	U:1	PRN129	-	-	
	bit 10	U:1	PRN130	-	-	
	bit 11	U:1	PRN131	-	-	
	bit 12	U:1	PRN132	-	-	
	bit 13	U:1	PRN133	-	-	
	bit 14	U:1	PRN134	-	-	
	bit 15	U:1	PRN135	-	-	
	bit 16	U:1	PRN136	-	-	
	bit 17	U:1	PRN137	-	-	
	bit 18	U:1	PRN138	-	-	
	bit 19	U:1	PRN139	-	-	
	bit 20	U:1	PRN140	-	-	
	bit 21	U:1	PRN141	-	-	
	bit 22	U:1	PRN142	-	-	
	bit 23	U:1	PRN143	-	-	
	bit 24	U:1	PRN144	-	-	
	bit 25	U:1	PRN145	-	-	
	bit 26	U:1	PRN146	-	-	
	bit 27	U:1	PRN147	-	-	
	bit 28	U:1	PRN148	-	-	
	bit 29	U:1	PRN149	-	-	
	bit 30	U:1	PRN150	-	-	

CONFIDENTIAL

bit 31	U:1	PRN151	-	-	

3.10.27 UBX-CFG-TP5 (0x06 0x31)

3.10.27.1 Time pulse parameters

Message	**UBX-CFG-TP5** **Time pulse parameters**					
Type	Get/set					
Comment	**This message is deprecated in protocol versions greater than 27. Use** UBX-CFG-VALSET, UBX-CFG-VALGET, UBX-CFG-VALDEL **instead.** See the Legacy UBX Message Fields Reference for the corresponding configuration item.					
Message structure	*Header*	*Class*	*ID*	*Length (Bytes)*	*Payload*	*Checksum*
	0xb5 0x62	0x06	0x31	32	*see below*	CK_A CK_B

Payload description:

Byte offset	*Type*	*Name*	*Scale*	*Unit*	*Description*
0	U1	`tpIdx`	-	-	Time pulse selection (0 = TIMEPULSE, 1 = TIMEPULSE2)
1	U1	`version`	-	-	Message version (0x01 for this version)
2	U1[2]	`reserved0`	-	-	Reserved
4	I2	`antCableDelay`	-	ns	Antenna cable delay
6	I2	`rfGroupDelay`	-	ns	RF group delay
8	U4	`freqPeriod`	-	Hz_or_us	Frequency or period time, depending on setting of bit 'isFreq'
12	U4	`freqPeriodLock`	-	Hz_or_us	Frequency or period time when locked to GNSS time, only used if 'lockedOtherSet' is set
16	U4	`pulseLenRatio`	-	us_or_2^-32	Pulse length or duty cycle, depending on 'isLength'
20	U4	`pulseLenRatioLock`	-	us_or_2^-32	Pulse length or duty cycle when locked to GNSS time, only used if 'lockedOtherSet' is set
24	I4	`userConfigDelay`	-	ns	User-configurable time pulse delay
28	X4	`flags`	-	-	Configuration flags
bit 0	U:1	`active`	-	-	If set enable time pulse; if pin assigned to another function, other function takes precedence. Must be set for FTS variant.
bit 1	U:1	`lockGnssFreq`	-	-	If set, synchronize time pulse to GNSS as soon as GNSS time is valid. If not set, or before GNSS time is valid, use local clock. This flag is ignored by the FTS product variant; in this case the receiver always locks to the best available time/frequency reference (which is not necessarily GNSS). This flag can be unset only in Timing product variants.
bit 2	U:1	`lockedOtherSet`	-	-	If set the receiver switches between the timepulse settings given by 'freqPeriodLocked' & 'pulseLenLocked' and those given by 'freqPeriod' & 'pulseLen'. The 'Locked' settings are used where the receiver has an accurate sense of time. For non-FTS products, this occurs when GNSS solution with a reliable time is available, but for FTS products the

CONFIDENTIAL

					setting syncMode field governs behavior. In all cases, the receiver only uses 'freqPeriod' & 'pulseLen' when the flag is unset.
bit 3	U:1	isFreq	-	-	If set 'freqPeriodLock' and 'freqPeriod' are interpreted as frequency, otherwise interpreted as period.
bit 4	U:1	isLength	-	-	If set 'pulseLenRatioLock' and 'pulseLenRatio' interpreted as pulse length, otherwise interpreted as duty cycle.
bit 5	U:1	alignToTow	-	-	Align pulse to top of second (period time must be integer fraction of 1s). Also set 'lockGnssFreq' to use this feature. This flag is ignored by the FTS product variant; it is assumed to be always set (as is lockGnssFreq). Set maxSlewRate and maxPhaseCorrRate fields of **UBX-CFG-SMGR** to 0 to disable alignment.
bit 6	U:1	polarity	-	-	Pulse polarity: • 0 = falling edge at top of second • 1 = rising edge at top of second
bits 10...7	U:4	gridUtcGnss	-	-	Timegrid to use: • 0 = UTC • 1 = GPS • 2 = GLONASS • 3 = BeiDou • 4 = Galileo (not supported for protocol versions less than 18.00) This flag is only relevant if 'lockGnssFreq' and 'alignToTow' are set. Note that configured GNSS time is estimated by the receiver if locked to any GNSS system. If the receiver has a valid GNSS fix it will attempt to steer the TP to the specified time grid even if the specified time is not based on information from the constellation's satellites. To ensure timing based purely on a given GNSS, restrict the supported constellations in UBX-CFG-GNSS.
bits 13...11	U:3	syncMode	-	-	Sync Manager lock mode to use: • 0 = switch to 'freqPeriodLock' and 'pulseLenRatioLock' as soon as Sync Manager has an accurate time, never switch back to 'freqPeriod' and 'pulseLenRatio' • 1 = switch to 'freqPeriodLock' and 'pulseLenRatioLock' as soon as Sync Manager has an accurate time, and switch back to 'freqPeriod' and 'pulseLenRatio' as soon as time gets inaccurate This field is only relevant for the FTS product variant. This field is only relevant if the flag 'lockedOtherSet' is set.

3.10.28 UBX-CFG-USB (0x06 0x1b)

3.10.28.1 USB configuration

Message	**UBX-CFG-USB** **USB configuration**
Type	Get/set

CONFIDENTIAL

Comment	**This message is deprecated in protocol versions greater than 23.01. Use** UBX-CFG-VALSET, UBX-CFG-VALGET, UBX-CFG-VALDEL **instead.** See the Legacy UBX Message Fields Reference for the corresponding configuration item.					
Message structure	*Header*	*Class*	*ID*	*Length (Bytes)*	*Payload*	*Checksum*
	0xb5 0x62	0x06	0x1b	108	*see below*	CK_A CK_B

Payload description:

Byte offset	*Type*	*Name*	*Scale*	*Unit*	*Description*
0	U2	`vendorID`	-	-	Vendor ID. This field shall only be set to registered Vendor IDs. Changing this field requires special Host drivers.
2	U2	`productID`	-	-	Product ID. Changing this field requires special Host drivers.
4	U1[2]	`reserved0`	-	-	Reserved
6	U1[2]	`reserved1`	-	-	Reserved
8	U2	`power Consumption`	-	mA	Power consumed by the device
10	X2	`flags`	-	-	various configuration flags
bit 0	$U_{:1}$	`reEnum`	-	-	force re-enumeration
bit 1	$U_{:1}$	`powerMode`	-	-	self-powered (1), bus-powered (0)
12	CH[32]	`vendorString`	-	-	String containing the vendor name. 32 ASCII bytes including 0-termination.
44	CH[32]	`productString`	-	-	String containing the product name. 32 ASCII bytes including 0-termination.
76	CH[32]	`serialNumber`	-	-	String containing the serial number. 32 ASCII bytes including 0-termination. Changing the String fields requires special Host drivers.

3.10.29 UBX-CFG-USBTEST (0x06 0x58)

3.10.29.1 USB testing

Message	**UBX-CFG-USBTEST** **USB testing**					
Type	Set					
Comment						
Message structure	*Header*	*Class*	*ID*	*Length (Bytes)*	*Payload*	*Checksum*
	0xb5 0x62	0x06	0x58	2	*see below*	CK_A CK_B

Payload description:

Byte offset	*Type*	*Name*	*Scale*	*Unit*	*Description*
0	U1	`version`	-	-	Message version (0x00 for this version)
1	U1	`usbPinState`	-	-	Define the USB test state and output • 0 = Test mode disabled, normal pin usage • 1 = Set tristate: DP=Z DM=Z • 2 = Output DP=1 DM=0 • 3 = Output DP=0 DM=1 • 4 = Output DP=0 DM=0

3.10.30 UBX-CFG-VALDEL (0x06 0x8c)

CONFIDENTIAL

3.10.30.1 Delete configuration item values

Message	**UBX-CFG-VALDEL** **Delete configuration item values**
Type	Set
Comment	Overview: • This message can be used to delete saved configuration to effectively revert the item values to defaults. • This message can delete saved configuration from the Flash configuration layer and the BBR configuration layer. The changes will not be effective until these layers are loaded into the RAM layer. • This message is limited to containing a maximum of 64 keys up for deletion; i.e. N is a maximum of 64. • This message can be used multiple times and every time the result will be applied immediately. To send this message multiple times with the result being applied at the end, see version 1 of UBX-CFG-VALDEL that supports transactions. • This message does not check if the resulting configuration is valid. • See Receiver configuration for details. This message returns a UBX-ACK-NAK and no configuration is applied: • if any key is unknown to the receiver FW • if the layer's bitfield does not specify a layer to delete a value from. Notes: • If a key is sent multiple times within the same message, then the value is effectively deleted only once. • Attempting to delete items that have not been set before, or that have already been deleted, is considered a valid request.

Message structure	*Header*	*Class*	*ID*	*Length (Bytes)*	*Payload*	*Checksum*
	0xb5 0x62	0x06	0x8c	4 + [0..n]·4	*see below*	CK_A CK_B

Payload description:

Byte offset	*Type*	*Name*	*Scale*	*Unit*	*Description*
0	U1	`version`	-	-	Message version (0x00 for this version)
1	X1	`layers`	-	-	The layers where the configuration should be deleted from
bit 1	$U_{:1}$	`bbr`	-	-	Delete configuration from the BBR layer
bit 2	$U_{:1}$	`flash`	-	-	Delete configuration from the Flash layer
2	U1[2]	`reserved0`	-	-	Reserved
Start of repeated group (N times)					
4 + n·4	U4	`keys`	-	-	Configuration key IDs of the configuration items to be deleted
End of repeated group (N times)					

3.10.30.2 Delete configuration item values (with transaction)

Message	**UBX-CFG-VALDEL** **Delete configuration item values (with transaction)**
Type	Set
Comment	Overview: • This message can be used to delete saved configuration to effectively revert them to defaults. • This message can delete saved configuration from the Flash configuration layer and the BBR configuration layer. The changes will not be effective until these layers are loaded into the RAM layer. • This message is limited to containing a maximum of 64 keys up for deletion; i.e. N is a maximum of 64. • This message can be used multiple times with the result being managed within a transaction. • This message does not check if the resulting configuration is valid. • See Receiver configuration for details. • See version 0 of UBX-CFG-VALDEL for simplified version of this message. This message returns a UBX-ACK-NAK, cancels any started transaction, and no configuration is applied: • if any key within a transaction is unknown to the receiver FW • if an invalid transaction state transition is requested

CONFIDENTIAL

- if the layer's bitfield changes within a transaction
- if the layer's bitfield does not specify a layer to delete a value from.

Notes:

- Any request for another UBX-CFG- message type (including UBX-CFG-VALSET and UBX-CFG-VALGET) will cancel any started transaction, and no configuration is applied.
- This message can be sent with no keys to delete for the purposes of managing the transaction state transition.
- If a key is sent multiple times within the same message or within the same transaction, then the value is effectively deleted only once.
- Attempting to delete items that have not been set before, or that have already been deleted, is considered a valid request.

Message structure	*Header*	*Class*	*ID*	*Length (Bytes)*	*Payload*	*Checksum*
	0xb5 0x62	0x06	0x8c	4 + [0..n]·4	*see below*	CK_A CK_B

Payload description:

Byte offset	*Type*	*Name*	*Scale*	*Unit*	*Description*
0	U1	`version`	-	-	Message version (0x01 for this version)
1	X1	`layers`	-	-	The layers where the configuration should be deleted from
bit 1	$U_{:1}$	`bbr`	-	-	Delete configuration from the BBR layer
bit 2	$U_{:1}$	`flash`	-	-	Delete configuration from the Flash layer
2	X1	`transaction`	-	-	Transaction action to be applied:
bits 1...0	$U_{:2}$	`action`	-	-	Transaction action to be applied: • 0 = Transactionless UBX-CFG-VALDEL: In the next UBX-CFG-VALDEL, it can be either 0 or 1. If a transaction has not yet been started, the incoming configuration is applied. If a transaction has already been started, cancels any started transaction and the incoming configuration is applied. • 1 = (Re)Start deletion transaction: In the next UBX-CFG-VALDEL, it can be either 0, 1, 2 or 3. If a transaction has not yet been started, a transaction will be started. If a transaction has already been started, restarts the transaction, effectively removing all previous non-applied UBX-CFG-VALDEL messages. • 2 = Deletion transaction ongoing: In the next UBX-CFG-VALDEL, it can be either 0, 1, 2 or 3. • 3 = Apply and end a deletion transaction: In the next UBX-CFG-VALDEL, it can be either 0 or 1.
3	U1	`reserved0`	-	-	Reserved
Start of repeated group (N times)					
4 + n·4	U4	`keys`	-	-	Configuration key IDs of the configuration items to be deleted
End of repeated group (N times)					

3.10.31 UBX-CFG-VALGET (0x06 0x8b)

3.10.31.1 Get configuration items

Message	**UBX-CFG-VALGET** **Get configuration items**
Type	Poll request
Comment	Overview:

CONFIDENTIAL

- This message is used to get configuration values by providing a list of configuration key IDs, which identify the configuration items to retrieve.
- This message can specify the configuration layer where the values of the specified configuration items are retrieved from.
- This message is limited to containing a maximum of 64 key IDs.
- See Receiver configuration for details.

This message returns a UBX-ACK-NAK:

- if any key is unknown to the receiver FW
- if the layer field specifies an invalid layer to get the value from
- if the keys array specifies more than 64 key IDs.

Notes:

- If a value is requested multiple times within the same poll request, then the reply will contain it multiple times.
- The provided keys can be complete key values (group and item specifiers) or wild-card specifications. A complete key value will constitute a request for one key-value pair. A key value that has a valid group specifier and 0xffff in the item part of the key value (bits 0-15) constitutes a request for all items in the specified group. A key with a value of 0xfff in the group part of the key value (bits 16-27) is a request for all items known to the receiver in all groups.
- The response message is limited to containing a maximum of 64 key-value pairs. If there are wild-card specifications then there may be more than 64 possible responses. In order to handle this, the "position" field can specify that the response message should skip this number of key-value pairs before it starts constructing the message. This allows a large set of values to be retrieved 64 at a time. If the response contains less than 64 key-value pairs then all values have been reported, otherwise there may be more to read.
- It is not possible to retrieve configuration values for the same configuration item from multiple configuration layers. Separate poll requests must be made for each desired layer.

Message structure	*Header*	*Class*	*ID*	*Length (Bytes)*	*Payload*	*Checksum*
	0xb5 0x62	0x06	0x8b	4 + [0..n]·4	*see below*	CK_A CK_B

Payload description:

Byte offset	*Type*	*Name*	*Scale*	*Unit*	*Description*
0	U1	`version`	-	-	Message version (0x00 for this version)
1	U1	`layer`	-	-	The layer from which the configuration items should be retrieved: • 0 - RAM layer • 1 - BBR layer • 2 - Flash layer • 3 - Image layer • 4 - OTP layer • 5 - Pin layer • 6 - ROM layer • 7 - Default layer
2	U2	`position`	-	-	Skip this many key values before constructing output message
Start of repeated group (N times)					
4 + n·4	U4	`keys`	-	-	Configuration key IDs of the configuration items to be retrieved
End of repeated group (N times)					

3.10.31.2 Configuration items

Message	**UBX-CFG-VALGET** **Configuration items**
Type	Polled
Comment	This message is output by the receiver to return requested configuration data (key and value pairs). See Receiver configuration for details.

CONFIDENTIAL

Message structure	Header	Class	ID	Length (Bytes)	Payload	Checksum
	0xb5 0x62	0x06	0x8b	4 + [0..n]	*see below*	CK_A CK_B

Payload description:

Byte offset	Type	Name	Scale	Unit	Description
0	U1	`version`	-	-	Message version (0x01 for this version)
1	U1	`layer`	-	-	The layer from which the configuration item was retrieved: • 0 - RAM layer • 1 - BBR • 2 - Flash • 3 - Image layer • 4 - OTP layer • 5 - Pin layer • 6 - ROM layer • 7 - Default
2	U2	`position`	-	-	Number of configuration items skipped in the result set before constructing this message (mirrors the equivalent field in the request message)
Start of repeated group (N times)					
4 + n	U1	`cfgData`	-	-	Configuration data (key and value pairs)
End of repeated group (N times)					

3.10.32 UBX-CFG-VALSET (0x06 0x8a)

3.10.32.1 Set configuration item values

Message	**UBX-CFG-VALSET** **Set configuration item values**
Type	Set
Comment	Overview: • This message is used to set a configuration by providing configuration data (a list of key and value pairs), which identify the configuration items to change, and their new values. • This message is limited to containing a maximum of 64 key-value pairs. • This message can be used multiple times and every time the result will be applied immediately. To send this message multiple times with the result being applied at the end, see version 1 of UBX-CFG-VALSET that supports transactions. • See Receiver configuration for details. This message returns a UBX-ACK-NAK and no configuration is applied: • if any key is unknown to the receiver FW • if the layer's bitfield does not specify a layer to save a value to • if the requested configuration is not valid. The validity of a configuration is checked only if the message requests to apply the configuration to the RAM configuration layer. Notes: • If a key is sent multiple times within the same message, then the value eventually being applied is the last sent.

Message structure	Header	Class	ID	Length (Bytes)	Payload	Checksum
	0xb5 0x62	0x06	0x8a	4 + [0..n]	*see below*	CK_A CK_B

Payload description:

Byte offset	Type	Name	Scale	Unit	Description
0	U1	`version`	-	-	Message version (0x00 for this version)
1	X1	`layers`	-	-	The layers where the configuration should be applied
bit 0	$U_{:1}$	`ram`	-	-	Update configuration in the RAM layer

CONFIDENTIAL

bit 1	U:1	bbr	-	-	Update configuration in the BBR layer
bit 2	U:1	flash	-	-	Update configuration in the Flash layer
2	U1[2]	reserved0	-	-	Reserved
Start of repeated group (N times)					
4 + n	U1	cfgData	-	-	Configuration data (key and value pairs)
End of repeated group (N times)					

3.10.32.2 Set configuration item values (with transaction)

Message	**UBX-CFG-VALSET** **Set configuration item values (with transaction)**
Type	Set
Comment	Overview: • This message is used to set a configuration by providing configuration data (a list of key and value pairs), which identify the configuration items to change, and their new values. • This message is limited to containing a maximum of 64 key-value pairs. • This message can be used multiple times with the result being managed within a transaction. Within a transaction there is no limit on the number key-value pairs; a transaction is effectively limited to the number of known keys. • See Receiver configuration for details. • See version 0 of UBX-CFG-VALSET for simplified version of this message. This message returns a UBX-ACK-NAK, cancels any started transaction, and no configuration is applied: • if any key within a transaction is unknown to the receiver FW • if an invalid transaction state transition is requested • if the layer's bitfield changes within a transaction • if the layer's bitfield does not specify a layer to save a value to This message returns a UBX-ACK-NAK, and no configuration is applied: • if the requested configuration is not valid. While in a transaction context, only the last message that requests to apply the transaction returns a UBX-ACK-NAK. The validity of a configuration is checked only if the message requests to apply the configuration to the RAM configuration layer. This also applies to a transactionless request. Notes: • Any request for another UBX-CFG-message type (including UBX-CFG-VALDEL and UBX-CFG-VALGET) will cancel any started transaction, and no configuration is applied. • This message can be sent with no key/values to set for the purposes of managing the transaction state transition. • If a key is sent multiple times within the same message or within the same transaction, then the value eventually being applied is the last sent.

Message structure	*Header*	*Class*	*ID*	*Length (Bytes)*	*Payload*	*Checksum*
	0xb5 0x62	0x06	0x8a	4 + [0..n]	*see below*	CK_A CK_B

Payload description:

Byte offset	*Type*	*Name*	*Scale*	*Unit*	*Description*
0	U1	version	-	-	Message version (0x01 for this version)
1	X1	layers	-	-	The layers where the configuration should be applied
bit 0	U:1	ram	-	-	Update configuration in the RAM layer
bit 1	U:1	bbr	-	-	Update configuration in the BBR layer
bit 2	U:1	flash	-	-	Update configuration in the Flash layer
2	U1	transaction	-	-	Transaction action to be applied
bits 1...0	U:2	action	-	-	Transaction action to be applied: • 0 = Transactionless UBX-CFG-VALSET: In the next UBX-CFG-VALSET, it can be either 0 or 1. If a transaction has not yet been started, the incoming configuration is applied (if valid). If a

CONFIDENTIAL

					transaction has already been started, cancels any started transaction and the incoming configuration is applied (if valid). • 1 = (Re)Start set transaction: In the next UBX-CFG-VALSET, it can be either 0, 1, 2 or 3. If a transaction has not yet been started, a transaction will be started. If a transaction has already been started, restarts the transaction, effectively removing all previous non-applied UBX-CFG-VALSET messages. • 2 = Set transaction ongoing: In the next UBX-CFG-VALSET, it can be either 0, 1, 2 or 3. • 3 = Apply and end a set transaction: In the next UBX-CFG-VALSET, it can be either 0 or 1.
3	U1	`reserved0`	-	-	Reserved
Start of repeated group (N times)					
4 + n	U1	`cfgData`	-	-	Configuration data (key and value pairs)
End of repeated group (N times)					

3.11 UBX-INF (0x04)

Messages in the UBX-INF class are used to output strings from the firmware or application code. All messages have an associated type to indicate the nature or priority of the message.

3.11.1 UBX-INF-DEBUG (0x04 0x04)

3.11.1.1 ASCII output with debug contents

Message	**UBX-INF-DEBUG** **ASCII output with debug contents**					
Type	Output					
Comment	This message has a variable length payload, representing an ASCII string.					
Message structure	*Header*	*Class*	*ID*	*Length (Bytes)*	*Payload*	*Checksum*
	0xb5 0x62	0x04	0x04	[0..n]	*see below*	CK_A CK_B

Payload description:

Byte offset	*Type*	*Name*	*Scale*	*Unit*	*Description*
Start of repeated group (N times)					
0 + n	CH	`str`	-	-	ASCII Character
End of repeated group (N times)					

3.11.2 UBX-INF-ERROR (0x04 0x00)

3.11.2.1 ASCII output with error contents

Message	**UBX-INF-ERROR** **ASCII output with error contents**					
Type	Output					
Comment	This message has a variable length payload, representing an ASCII string.					
Message structure	*Header*	*Class*	*ID*	*Length (Bytes)*	*Payload*	*Checksum*
	0xb5 0x62	0x04	0x00	[0..n]	*see below*	CK_A CK_B

Payload description:

Byte offset	*Type*	*Name*	*Scale*	*Unit*	*Description*

CONFIDENTIAL

Start of repeated group (N times)					
0 + n	CH	`str`	-	-	ASCII Character
End of repeated group (N times)					

3.11.3 UBX-INF-NOTICE (0x04 0x02)

3.11.3.1 ASCII output with informational contents

Message	**UBX-INF-NOTICE** **ASCII output with informational contents**					
Type	Output					
Comment	This message has a variable length payload, representing an ASCII string.					
Message structure	*Header*	*Class*	*ID*	*Length (Bytes)*	*Payload*	*Checksum*
	0xb5 0x62	0x04	0x02	[0..n]	*see below*	CK_A CK_B

Payload description:

Byte offset	*Type*	*Name*	*Scale*	*Unit*	*Description*
Start of repeated group (N times)					
0 + n	CH	`str`	-	-	ASCII Character
End of repeated group (N times)					

3.11.4 UBX-INF-TEST (0x04 0x03)

3.11.4.1 ASCII output with test contents

Message	**UBX-INF-TEST** **ASCII output with test contents**					
Type	Output					
Comment	This message has a variable length payload, representing an ASCII string.					
Message structure	*Header*	*Class*	*ID*	*Length (Bytes)*	*Payload*	*Checksum*
	0xb5 0x62	0x04	0x03	[0..n]	*see below*	CK_A CK_B

Payload description:

Byte offset	*Type*	*Name*	*Scale*	*Unit*	*Description*
Start of repeated group (N times)					
0 + n	CH	`str`	-	-	ASCII Character
End of repeated group (N times)					

3.11.5 UBX-INF-WARNING (0x04 0x01)

3.11.5.1 ASCII output with warning contents

Message	**UBX-INF-WARNING** **ASCII output with warning contents**					
Type	Output					
Comment	This message has a variable length payload, representing an ASCII string.					
Message structure	*Header*	*Class*	*ID*	*Length (Bytes)*	*Payload*	*Checksum*
	0xb5 0x62	0x04	0x01	[0..n]	*see below*	CK_A CK_B

Payload description:

Byte offset	*Type*	*Name*	*Scale*	*Unit*	*Description*

CONFIDENTIAL

Start of repeated group (N times)					
0 + n	CH	str	-	-	ASCII Character
End of repeated group (N times)					

3.12 UBX-LOG (0x21)

The messages in the UBX-LOG class are used to configure and report status information of the logging and data batching features.

3.12.1 UBX-LOG-BATCH (0x21 0x11)

3.12.1.1 Batched data

Message	**UBX-LOG-BATCH** **Batched data**					
Type	Polled					
Comment	This message combines position, velocity and time solution, including accuracy figures. The output of this message can be requested via UBX-LOG-RETRIEVEBATCH. The content of this message is influenced by UBX-CFG-BATCH. Depending on the flags `extraPvt` and `extraOdo` some of the fields in this message may not be valid. This validity information is also indicated in this message via flags of the same name. See the Data Batching section in the Integration manual for more information. Note that during a leap second there may be more or less than 60 seconds in a minute. See the description of leap seconds in the Integration manual for details.					
Message structure	*Header*	*Class*	*ID*	*Length (Bytes)*	*Payload*	*Checksum*
	0xb5 0x62	0x21	0x11	100	*see below*	CK_A CK_B

Payload description:

Byte offset	*Type*	*Name*	*Scale*	*Unit*	*Description*
0	U1	`version`	-	-	Message version (0x00 for this version)
1	X1	`contentValid`	-	-	Content validity flags
bit 0	$U_{:1}$	`extraPvt`	-	-	Store extra PVT information The fields `iTOW`, `tAcc`, `numSV`, `hMSL`, `vAcc`, `velN`, `velE`, `velD`, `sAcc`, `headAcc` and `pDOP` are only valid if this flag is set.
bit 1	$U_{:1}$	`extraOdo`	-	-	Store odometer data The fields `distance`, `totalDistance` and `distanceStd` are only valid if this flag is set. Note: the odometer feature itself must also be enabled.
2	U2	`msgCnt`	-	-	Message counter; increments for each sent UBX-LOG-BATCH message.
4	U4	`iTOW`	-	ms	GPS time of week of the navigation epoch. See the description of iTOW in the Integration manual for details. Only valid if `extraPvt` is set.
8	U2	`year`	-	y	Year (UTC)
10	U1	`month`	-	month	Month, range 1..12 (UTC)
11	U1	`day`	-	d	Day of month, range 1..31 (UTC)
12	U1	`hour`	-	h	Hour of day, range 0..23 (UTC)

CONFIDENTIAL

13	U1	min	-	min	Minute of hour, range 0..59 (UTC)
14	U1	sec	-	s	Seconds of minute, range 0..60 (UTC)
15	X1	valid	-	-	Validity flags
bit 0	U:1	validDate	-	-	1 = valid UTC Date (see the Time validity section in the Integration manual for details)
bit 1	U:1	validTime	-	-	1 = valid UTC Time of Day (see the Time validity section in the Integration manual for details)
16	U4	tAcc	-	ns	Time accuracy estimate (UTC) Only valid if extraPvt is set.
20	I4	fracSec	-	ns	Fraction of second, range -1e9 .. 1e9 (UTC)
24	U1	fixType	-	-	GNSSfix Type: • 0 = no fix • 2 = 2D-fix • 3 = 3D-fix
25	X1	flags	-	-	Fix status flags
bit 0	U:1	gnssFixOK	-	-	1 = valid fix (i.e within DOP & accuracy masks)
bit 1	U:1	diffSoln	-	-	1 = differential corrections were applied
bits 4...2	U:3	psmState	-	-	Power save mode state (see the Power management section in the Integration manual for details) • 0 = PSM is not active • 1 = Enabled (an intermediate state before Acquisition state) • 2 = Acquisition • 3 = Tracking • 4 = Power optimized tracking • 5 = Inactive
26	X1	flags2	-	-	Additional flags
27	U1	numSV	-	-	Number of satellites used in Nav Solution Only valid if extraPvt is set.
28	I4	lon	1e-7	deg	Longitude
32	I4	lat	1e-7	deg	Latitude
36	I4	height	-	mm	Height above ellipsoid
40	I4	hMSL	-	mm	Height above mean sea level Only valid if extraPvt is set.
44	U4	hAcc	-	mm	Horizontal accuracy estimate
48	U4	vAcc	-	mm	Vertical accuracy estimate Only valid if extraPvt is set.
52	I4	velN	-	mm/s	NED north velocity Only valid if extraPvt is set.
56	I4	velE	-	mm/s	NED east velocity Only valid if extraPvt is set.
60	I4	velD	-	mm/s	NED down velocity Only valid if extraPvt is set.
64	I4	gSpeed	-	mm/s	Ground Speed (2-D)

CONFIDENTIAL

68	I4	headMot	1e-5	deg	Heading of motion (2-D)
72	U4	sAcc	-	mm/s	Speed accuracy estimate Only valid if extraPvt is set.
76	U4	headAcc	1e-5	deg	Heading accuracy estimate Only valid if extraPvt is set.
80	U2	pDOP	0.01	-	Position DOP Only valid if extraPvt is set.
82	U1[2]	reserved0	-	-	Reserved
84	U4	distance	-	m	Ground distance since last reset Only valid if extraOdo is set.
88	U4	totalDistance	-	m	Total cumulative ground distance Only valid if extraOdo is set.
92	U4	distanceStd	-	m	Ground distance accuracy (1-sigma) Only valid if extraOdo is set.
96	U1[4]	reserved1	-	-	Reserved

3.12.2 UBX-LOG-CREATE (0x21 0x07)

3.12.2.1 Create log file

Message	**UBX-LOG-CREATE** **Create log file**					
Type	Command					
Comment	This message is used to create an initial logging file and activate the logging subsystem. UBX-ACK-ACK or UBX-ACK-NAK are returned to indicate success or failure. This message does not handle activation of recording or filtering of log entries (see CFG-LOGFILTER: Data logger configuration).					
Message structure	*Header*	*Class*	*ID*	*Length (Bytes)*	*Payload*	*Checksum*
	0xb5 0x62	0x21	0x07	8	*see below*	CK_A CK_B

Payload description:

Byte offset	*Type*	*Name*	*Scale*	*Unit*	*Description*
0	U1	version	-	-	Message version (0x00 for this version)
1	X1	logCfg	-	-	Config flags
bit 0	U:1	circular	-	-	Log is circular (new entries overwrite old ones in a full log) if this bit set
2	U1	reserved0	-	-	Reserved
3	U1	logSize	-	-	Indicates the size of the log: • 0 (maximum safe size) = Ensures that logging will not be interrupted and enough space will be left available for all other uses of the filestore • 1 (minimum size) = • 2 (user-defined) = See 'userDefinedSize' below
4	U4	userDefined Size	-	bytes	Sets the maximum amount of space in the filestore that can be used by the logging task. This field is only applicable if logSize is set to user-defined.

3.12.3 UBX-LOG-ERASE (0x21 0x03)

CONFIDENTIAL

3.12.3.1 Erase logged data

Message	**UBX-LOG-ERASE** **Erase logged data**					
Type	Command					
Comment	This message deactivates the logging system and erases all logged data. UBX-ACK-ACK or UBX-ACK-NAK are returned to indicate success or failure.					
Message structure	*Header*	*Class*	*ID*	*Length (Bytes)*	*Payload*	*Checksum*
	0xb5 0x62	0x21	0x03	0	*see below*	CK_A CK_B
Payload	This message has no payload.					

3.12.4 UBX-LOG-FINDTIME (0x21 0x0e)

3.12.4.1 Find index of a log entry based on a given time

Message	**UBX-LOG-FINDTIME** **Find index of a log entry based on a given time**					
Type	Input					
Comment	This message can be used for a time-based search of a log. It can find the index of the first log entry with time equal to the given time, otherwise the index of the most recent entry with time less than the given time. This index can then be used with the UBX-LOG-RETRIEVE message to provide time-based retrieval of log entries. Searching a log is effective for a given time later than the base date (January 1st, 2004). Searching a log for a given time earlier than the base date will result in an 'entry not found' response. (Searching a log for a given time earlier than the base date will result in a UBX-ACK-NAK message for protocol versions less than 18.00). Searching a log for a given time greater than the last recorded entry's time will return the index of the last recorded entry. (If the logging has stopped due to lack of file space, such a search will result in a UBX-ACK-NAK message for protocol versions less than 18.00).					
Message structure	*Header*	*Class*	*ID*	*Length (Bytes)*	*Payload*	*Checksum*
	0xb5 0x62	0x21	0x0e	12	*see below*	CK_A CK_B

Payload description:

Byte offset	*Type*	*Name*	*Scale*	*Unit*	*Description*
0	U1	`version`	-	-	Message version (0x00 for this version)
1	U1	`type`	-	-	Message type, 0 for request
2	U1[2]	`reserved0`	-	-	Reserved
4	U2	`year`	-	-	Year (1-65635) of UTC time
6	U1	`month`	-	-	Month (1-12) of UTC time
7	U1	`day`	-	-	Day (1-31) of UTC time
8	U1	`hour`	-	-	Hour (0-23) of UTC time
9	U1	`minute`	-	-	Minute (0-59) of UTC time
10	U1	`second`	-	-	Second (0-60) of UTC time
11	U1	`reserved1`	-	-	Reserved

3.12.4.2 Response to FINDTIME request

Message	**UBX-LOG-FINDTIME** **Response to FINDTIME request**					
Type	Output					
Comment						
Message structure	*Header*	*Class*	*ID*	*Length (Bytes)*	*Payload*	*Checksum*
	0xb5 0x62	0x21	0x0e	8	*see below*	CK_A CK_B

CONFIDENTIAL

Payload description:					
Byte offset	*Type*	*Name*	*Scale*	*Unit*	*Description*
0	U1	`version`	-	-	Message version (0x01 for this version)
1	U1	`type`	-	-	Message type, 1 for response
2	U1[2]	`reserved0`	-	-	Reserved
4	U4	`entryNumber`	-	-	Index of the first log entry with time = given time, otherwise index of the most recent entry with time < given time. If 0xFFFFFFFF, no log entry found with time <= given time. The indexing of log entries is zero-based.

3.12.5 UBX-LOG-INFO (0x21 0x08)

3.12.5.1 Poll for log information

Message	**UBX-LOG-INFO** **Poll for log information**					
Type	Poll request					
Comment	Upon sending of this message, the receiver returns UBX-LOG-INFO as defined below.					
Message structure	*Header*	*Class*	*ID*	*Length (Bytes)*	*Payload*	*Checksum*
	0xb5 0x62	0x21	0x08	0	*see below*	CK_A CK_B
Payload	This message has no payload.					

3.12.5.2 Log information

Message	**UBX-LOG-INFO** **Log information**					
Type	Output					
Comment	This message is used to report information about the logging subsystem. Note: • The reported maximum log size will be smaller than that originally specified in LOG-CREATE due to logging and filestore implementation overheads. • Log entries are compressed in a variable length fashion, so it may be difficult to predict log space usage with any precision. • There may be times when the receiver does not have an accurate time (e.g. if the week number is not yet known), in which case some entries will not have a timestamp. This may result in the oldest/newest entry time values not taking account of these entries.					
Message structure	*Header*	*Class*	*ID*	*Length (Bytes)*	*Payload*	*Checksum*
	0xb5 0x62	0x21	0x08	48	*see below*	CK_A CK_B

Payload description:					
Byte offset	*Type*	*Name*	*Scale*	*Unit*	*Description*
0	U1	`version`	-	-	Message version (0x01 for this version)
1	U1[3]	`reserved0`	-	-	Reserved
4	U4	`filestoreCapacity`	-	bytes	The capacity of the filestore
8	U1[8]	`reserved1`	-	-	Reserved
16	U4	`currentMaxLogSize`	-	bytes	The maximum size the current log is allowed to grow to
20	U4	`currentLogSize`	-	bytes	Approximate amount of space in log currently occupied

CONFIDENTIAL

24	U4	entryCount	-	-	Number of entries in the log. Note: for circular logs this value will decrease when a group of entries is deleted to make space for new ones.
28	U2	oldestYear	-	-	Oldest entry UTC year (1-65635) or zero if there are no entries with known time
30	U1	oldestMonth	-	-	Oldest month (1-12)
31	U1	oldestDay	-	-	Oldest day (1-31)
32	U1	oldestHour	-	-	Oldest hour (0-23)
33	U1	oldestMinute	-	-	Oldest minute (0-59)
34	U1	oldestSecond	-	-	Oldest second (0-60)
35	U1	reserved2	-	-	Reserved
36	U2	newestYear	-	-	Newest year (1-65635) or zero if there are no entries with known time
38	U1	newestMonth	-	-	Newest month (1-12)
39	U1	newestDay	-	-	Newest day (1-31)
40	U1	newestHour	-	-	Newest hour (0-23)
41	U1	newestMinute	-	-	Newest minute (0-59)
42	U1	newestSecond	-	-	Newest second (0-60)
43	U1	reserved3	-	-	Reserved
44	X1	status	-	-	Log status flags
bit 3	$U_{:1}$	recording	-	-	Log entry recording is currently turned on
bit 4	$U_{:1}$	inactive	-	-	Logging system not active - no log present
bit 5	$U_{:1}$	circular	-	-	The current log is circular
45	U1[3]	reserved4	-	-	Reserved

3.12.6 UBX-LOG-RETRIEVE (0x21 0x09)

3.12.6.1 Request log data

Message	**UBX-LOG-RETRIEVE** **Request log data**					
Type	Command					
Comment	This message is used to request logged data (log recording must first be disabled), see CFG-LOGFILTER: Data logger configuration. Log entries are returned in chronological order, using the messages UBX-LOG-RETRIEVEPOS and UBX-LOG-RETRIEVESTRING. The maximum number of entries that can be returned in response to a single UBX-LOG-RETRIEVE message is 256. If more entries than this are required the message will need to be sent multiple times with different startNumbers. The retrieve will be stopped if any UBX-LOG message is received.					
Message structure	*Header*	*Class*	*ID*	*Length (Bytes)*	*Payload*	*Checksum*
	0xb5 0x62	0x21	0x09	12	*see below*	CK_A CK_B

Payload description:

Byte offset	*Type*	*Name*	*Scale*	*Unit*	*Description*
0	U4	startNumber	-	-	Index of first log entry to be transferred. If it is larger than the index of the last available log entry, then the first log entry to be transferred is the last available log entry. The indexing of log entries is zero-based.

CONFIDENTIAL

4	U4	entryCount	-	-	Number of log entries to transfer in total including the first entry to be transferred. If it is larger than the log entries available starting from the first entry to be transferred, then only the available log entries are transferred followed by a UBX-ACK-NAK. The maximum is 256.
8	U1	version	-	-	Message version (0x00 for this version)
9	U1[3]	reserved0	-	-	Reserved

3.12.7 UBX-LOG-RETRIEVEBATCH (0x21 0x10)

3.12.7.1 Request batch data

Message	**UBX-LOG-RETRIEVEBATCH** **Request batch data**					
Type	Command					
Comment	This message is used to request batched data. Batch entries are returned in chronological order, using one UBX-LOG-BATCH per navigation epoch. The speed of transfer can be maximized by using a high data rate. See The Data batching section in the Integration manual for more information.					
Message structure	*Header*	*Class*	*ID*	*Length (Bytes)*	*Payload*	*Checksum*
	0xb5 0x62	0x21	0x10	4	*see below*	CK_A CK_B

Payload description:

Byte offset	*Type*	*Name*	*Scale*	*Unit*	*Description*
0	U1	version	-	-	Message version (0x00 for this version)
1	X1	flags	-	-	Flags
bit 0	U:1	sendMonFirst	-	-	Send UBX-MON-BATCH message before sending the UBX-LOG-BATCH message(s).
2	U1[2]	reserved0	-	-	Reserved

3.12.8 UBX-LOG-RETRIEVEPOS (0x21 0x0b)

3.12.8.1 Position fix log entry

Message	**UBX-LOG-RETRIEVEPOS** **Position fix log entry**					
Type	Output					
Comment	This message is used to report a position fix log entry					
Message structure	*Header*	*Class*	*ID*	*Length (Bytes)*	*Payload*	*Checksum*
	0xb5 0x62	0x21	0x0b	40	*see below*	CK_A CK_B

Payload description:

Byte offset	*Type*	*Name*	*Scale*	*Unit*	*Description*
0	U4	entryIndex	-	-	The index of this log entry
4	I4	lon	1e-7	deg	Longitude
8	I4	lat	1e-7	deg	Latitude
12	I4	hMSL	-	mm	Height above mean sea level
16	U4	hAcc	-	mm	Horizontal accuracy estimate
20	U4	gSpeed	-	mm/s	Ground speed (2-D)

CONFIDENTIAL

24	U4	heading	1e-5	deg	Heading
28	U1	version	-	-	Message version (0x00 for this version)
29	U1	fixType	-	-	Fix type: • 0x01 = Dead Reckoning only • 0x02 = 2D-Fix • 0x03 = 3D-Fix • 0x04 = GNSS + Dead Reckoning combined
30	U2	year	-	-	Year (1-65635) of UTC time
32	U1	month	-	-	Month (1-12) of UTC time
33	U1	day	-	-	Day (1-31) of UTC time
34	U1	hour	-	-	Hour (0-23) of UTC time
35	U1	minute	-	-	Minute (0-59) of UTC time
36	U1	second	-	-	Second (0-60) of UTC time
37	U1	reserved0	-	-	Reserved
38	U1	numSV	-	-	Number of satellites used in the position fix
39	U1	reserved1	-	-	Reserved

3.12.9 UBX-LOG-RETRIEVEPOSEXTRA (0x21 0x0f)

3.12.9.1 Odometer log entry

Message	**UBX-LOG-RETRIEVEPOSEXTRA** **Odometer log entry**					
Type	Output					
Comment	This message is used to report an odometer log entry					
Message structure	*Header*	*Class*	*ID*	*Length (Bytes)*	*Payload*	*Checksum*
	0xb5 0x62	0x21	0x0f	32	*see below*	CK_A CK_B

Payload description:

Byte offset	*Type*	*Name*	*Scale*	*Unit*	*Description*
0	U4	entryIndex	-	-	The index of this log entry
4	U1	version	-	-	Message version (0x00 for this version)
5	U1	reserved0	-	-	Reserved
6	U2	year	-	-	Year (1-65635) of UTC time. Will be zero if time not known
8	U1	month	-	-	Month (1-12) of UTC time
9	U1	day	-	-	Day (1-31) of UTC time
10	U1	hour	-	-	Hour (0-23) of UTC time
11	U1	minute	-	-	Minute (0-59) of UTC time
12	U1	second	-	-	Second (0-60) of UTC time
13	U1[3]	reserved1	-	-	Reserved
16	U4	distance	-	-	Odometer distance traveled since the last time the odometer was reset by a UBX-NAV-RESETODO
20	U1[12]	reserved2	-	-	Reserved

3.12.10 UBX-LOG-RETRIEVESTRING (0x21 0x0d)

CONFIDENTIAL

3.12.10.1 Byte string log entry

Message	**UBX-LOG-RETRIEVESTRING** **Byte string log entry**					
Type	Output					
Comment	This message is used to report a byte string log entry					
Message structure	*Header*	*Class*	*ID*	*Length (Bytes)*	*Payload*	*Checksum*
	0xb5 0x62	0x21	0x0d	16 + byteCount	*see below*	CK_A CK_B

Payload description:

Byte offset	*Type*	*Name*	*Scale*	*Unit*	*Description*
0	U4	`entryIndex`	-	-	The index of this log entry
4	U1	`version`	-	-	Message version (0x00 for this version)
5	U1	`reserved0`	-	-	Reserved
6	U2	`year`	-	-	Year (1-65635) of UTC time. Will be zero if time not known
8	U1	`month`	-	-	Month (1-12) of UTC time
9	U1	`day`	-	-	Day (1-31) of UTC time
10	U1	`hour`	-	-	Hour (0-23) of UTC time
11	U1	`minute`	-	-	Minute (0-59) of UTC time
12	U1	`second`	-	-	Second (0-60) of UTC time
13	U1	`reserved1`	-	-	Reserved
14	U2	`byteCount`	-	-	Size of string in bytes
Start of repeated group (`byteCount` times)					
16 + n	U1	`bytes`	-	-	The bytes of the string
End of repeated group (`byteCount` times)					

3.12.11 UBX-LOG-STRING (0x21 0x04)

3.12.11.1 Store arbitrary string in on-board flash

Message	**UBX-LOG-STRING** **Store arbitrary string in on-board flash**					
Type	Command					
Comment	This message can be used to store an arbitrary byte string in the on-board flash memory. The maximum length that can be stored is 256 bytes.					
Message structure	*Header*	*Class*	*ID*	*Length (Bytes)*	*Payload*	*Checksum*
	0xb5 0x62	0x21	0x04	[0..n]	*see below*	CK_A CK_B

Payload description:

Byte offset	*Type*	*Name*	*Scale*	*Unit*	*Description*
Start of repeated group (N times)					
0 + n	U1	`bytes`	-	-	The string of bytes to be logged (maximum 256)
End of repeated group (N times)					

CONFIDENTIAL

3.13 UBX-MGA (0x13)

The messages in the UBX-MGA class are used for sending GNSS assistance (A-GNSS, aiding) information to the receiver as well as backing up the navigation database from the receiver to a host.

3.13.1 UBX-MGA-ACK (0x13 0x60)

3.13.1.1 Multiple GNSS acknowledge message

Message	**UBX-MGA-ACK-DATA0** **Multiple GNSS acknowledge message**					
Type	Output					
Comment	This message is sent by a u-blox receiver to acknowledge the receipt of an assistance message. Acknowledgments are enabled by setting the CFG-NAVSPG-ACKAIDING item. See the section Flow control in Integration manual for details.					
Message structure	*Header*	*Class*	*ID*	*Length (Bytes)*	*Payload*	*Checksum*
	0xb5 0x62	0x13	0x60	8	*see below*	CK_A CK_B

Payload description:

Byte offset	*Type*	*Name*	*Scale*	*Unit*	*Description*
0	U1	`type`	-	-	Type of acknowledgment: • 0 = The message was not used by the receiver (see infoCode field for an indication of why) • 1 = The message was accepted for use by the receiver (the infoCode field will be 0)
1	U1	`version`	-	-	Message version (0x00 for this version)
2	U1	`infoCode`	-	-	Provides greater information on what the receiver chose to do with the message contents: • 0 = The receiver accepted the data • 1 = The receiver does not know the time so it cannot use the data (To resolve this a UBX-MGA-INI-TIME_UTC message should be supplied first) • 2 = The message version is not supported by the receiver • 3 = The message size does not match the message version • 4 = The message data could not be stored to the database • 5 = The receiver is not ready to use the message data • 6 = The message type is unknown
3	U1	`msgId`	-	-	UBX message ID of the acknowledged message
4	U1[4]	`msgPayloadStart`	-	-	The first 4 bytes of the acknowledged message's payload

3.13.2 UBX-MGA-ANO (0x13 0x20)

3.13.2.1 Multiple GNSS AssistNow Offline assistance

Message	**UBX-MGA-ANO** **Multiple GNSS AssistNow Offline assistance**
Type	Input
Comment	This message is created by the AssistNow Offline service to deliver AssistNow Offline assistance to the receiver. See the description of AssistNow Offline for details.

CONFIDENTIAL

Message structure	Header	Class	ID	Length (Bytes)	Payload	Checksum
	0xb5 0x62	0x13	0x20	76	*see below*	CK_A CK_B

Payload description:

Byte offset	Type	Name	Scale	Unit	Description
0	U1	`type`	-	-	Message type (0x00 for this type)
1	U1	`version`	-	-	Message version (0x00 for this version)
2	U1	`svId`	-	-	Satellite identifier (see Satellite Numbering)
3	U1	`gnssId`	-	-	GNSS identifier (see Satellite Numbering)
4	U1	`year`	-	-	years since the year 2000
5	U1	`month`	-	-	month (1..12)
6	U1	`day`	-	-	day (1..31)
7	U1	`reserved0`	-	-	Reserved
8	U1[64]	`data`	-	-	assistance data
72	U1[4]	`reserved1`	-	-	Reserved

3.13.3 UBX-MGA-BDS (0x13 0x03)

3.13.3.1 BDS ephemeris assistance

Message	**UBX-MGA-BDS-EPH** **BDS ephemeris assistance**
Type	Input
Comment	This message allows the delivery of BeiDou ephemeris assistance to a receiver. See the section AssistNow online in Integration manual for details.

Message structure	Header	Class	ID	Length (Bytes)	Payload	Checksum
	0xb5 0x62	0x13	0x03	88	*see below*	CK_A CK_B

Payload description:

Byte offset	Type	Name	Scale	Unit	Description
0	U1	`type`	-	-	Message type (0x01 for this type)
1	U1	`version`	-	-	Message version (0x00 for this version)
2	U1	`svId`	-	-	BDS satellite identifier (see Satellite Numbering)
3	U1	`reserved0`	-	-	Reserved
4	U1	`SatH1`	-	-	Autonomous satellite Health flag
5	U1	`IODC`	-	-	Issue of Data, Clock
6	I2	`a2`	2^-66	s/s^2	Time polynomial coefficient 2
8	I4	`a1`	2^-50	s/s	Time polynomial coefficient 1
12	I4	`a0`	2^-33	s	Time polynomial coefficient 0
16	U4	`toc`	2^3	s	Clock data reference time
20	I2	`TGD1`	0.1	ns	Equipment Group Delay Differential
22	U1	`URAI`	-	-	User Range Accuracy Index
23	U1	`IODE`	-	-	Issue of Data, Ephemeris
24	U4	`toe`	2^3	s	Ephemeris reference time
28	U4	`sqrtA`	2^-19	m^0.5	Square root of semi-major axis
32	U4	`e`	2^-33	-	Eccentricity

CONFIDENTIAL

36	I4	omega	2^-31	semi-circles	Argument of perigee
40	I2	Deltan	2^-43	semi-circles/s	Mean motion difference from computed value
42	I2	IDOT	2^-43	semi-circles/s	Rate of inclination angle
44	I4	M0	2^-31	semi-circles	Mean anomaly at reference time
48	I4	Omega0	2^-31	semi-circles	Longitude of ascending node of orbital of plane computed according to reference time
52	I4	OmegaDot	2^-43	semi-circles/s	Rate of right ascension
56	I4	i0	2^-31	semi-circles	Inclination angle at reference time
60	I4	Cuc	2^-31	semi-circles	Amplitude of cosine harmonic correction term to the argument of latitude
64	I4	Cus	2^-31	semi-circles	Amplitude of sine harmonic correction term to the argument of latitude
68	I4	Crc	2^-6	m	Amplitude of cosine harmonic correction term to the orbit radius
72	I4	Crs	2^-6	m	Amplitude of sine harmonic correction term to the orbit radius
76	I4	Cic	2^-31	semi-circles	Amplitude of cosine harmonic correction term to the angle of inclination
80	I4	Cis	2^-31	semi-circles	Amplitude of sine harmonic correction term to the angle of inclination
84	U1[4]	reserved1	-	-	Reserved

3.13.3.2 BDS almanac assistance

Message	**UBX-MGA-BDS-ALM** **BDS almanac assistance**					
Type	Input					
Comment	This message allows the delivery of BeiDou almanac assistance to a receiver. See the section AssistNow online in Integration manual for details.					
Message structure	*Header*	*Class*	*ID*	*Length (Bytes)*	*Payload*	*Checksum*
	0xb5 0x62	0x13	0x03	40	*see below*	CK_A CK_B

Payload description:

Byte offset	*Type*	*Name*	*Scale*	*Unit*	*Description*
0	U1	type	-	-	Message type (0x02 for this version)
1	U1	version	-	-	Message version (0x00 for this version)
2	U1	svId	-	-	BeiDou satellite identifier (see Satellite Numbering)
3	U1	reserved0	-	-	Reserved
4	U1	Wna	-	week	Almanac Week Number
5	U1	toa	2^12	s	Almanac reference time
6	I2	deltaI	2^-19	semi-circles	Almanac correction of orbit reference inclination at reference time
8	U4	sqrtA	2^-11	m^0.5	Almanac square root of semi-major axis
12	U4	e	2^-21	-	Almanac eccentricity

CONFIDENTIAL

16	I4	omega	2^-23	semi-circles	Almanac argument of perigee
20	I4	M0	2^-23	semi-circles	Almanac mean anomaly at reference time
24	I4	Omega0	2^-23	semi-circles	Almanac longitude of ascending node of orbit plane at computed according to reference time
28	I4	omegaDot	2^-38	semi-circles/s	Almanac rate of right ascension
32	I2	a0	2^-20	s	Almanac satellite clock bias
34	I2	a1	2^-38	s/s	Almanac satellite clock rate
36	U1[4]	reserved1	-	-	Reserved

3.13.3.3 BDS health assistance

Message	**UBX-MGA-BDS-HEALTH** **BDS health assistance**					
Type	Input					
Comment	This message allows the delivery of BeiDou health assistance to a receiver. See the section AssistNow online in Integration manual for details.					
Message structure	*Header*	*Class*	*ID*	*Length (Bytes)*	*Payload*	*Checksum*
	0xb5 0x62	0x13	0x03	68	*see below*	CK_A CK_B

Payload description:

Byte offset	*Type*	*Name*	*Scale*	*Unit*	*Description*
0	U1	type	-	-	Message type (0x04 for this type)
1	U1	version	-	-	Message version (0x00 for this version)
2	U1[2]	reserved0	-	-	Reserved
4	U2[30]	healthCode	-	-	Each two-byte value represents a BDS SV (1-30). The 9 LSBs of each byte contain the 9 bit health code from subframe 5 pages 7,8 of the D1 message, and from subframe 5 pages 35,36 of the D1 message.
64	U1[4]	reserved1	-	-	Reserved

3.13.3.4 BDS UTC assistance

Message	**UBX-MGA-BDS-UTC** **BDS UTC assistance**					
Type	Input					
Comment	This message allows the delivery of BeiDou UTC assistance to a receiver. See the section AssistNow online in Integration manual for details.					
Message structure	*Header*	*Class*	*ID*	*Length (Bytes)*	*Payload*	*Checksum*
	0xb5 0x62	0x13	0x03	20	*see below*	CK_A CK_B

Payload description:

Byte offset	*Type*	*Name*	*Scale*	*Unit*	*Description*
0	U1	type	-	-	Message type (0x05 for this type)
1	U1	version	-	-	Message version (0x00 for this version)
2	U1[2]	reserved0	-	-	Reserved
4	I4	a0UTC	2^-30	s	BDT clock bias relative to UTC
8	I4	a1UTC	2^-50	s/s	BDT clock rate relative to UTC

CONFIDENTIAL

12	I1	dtLS	-	s	Delta time due to leap seconds before the new leap second effective
13	U1	reserved1	-	-	Reserved
14	U1	wnRec	-	week	BeiDou week number of reception of this UTC parameter set (8-bit truncated)
15	U1	wnLSF	-	week	Week number of the new leap second
16	U1	dN	-	day	Day number of the new leap second
17	I1	dtLSF	-	s	Delta time due to leap seconds after the new leap second effective
18	U1[2]	reserved2	-	-	Reserved

3.13.3.5 BDS ionosphere assistance

Message	**UBX-MGA-BDS-IONO** **BDS ionosphere assistance**					
Type	Input					
Comment	This message allows the delivery of BeiDou ionospheric assistance to a receiver. See the section AssistNow online in Integration manual for details.					
Message structure	*Header*	*Class*	*ID*	*Length (Bytes)*	*Payload*	*Checksum*
	0xb5 0x62	0x13	0x03	16	*see below*	CK_A CK_B

Payload description:

Byte offset	*Type*	*Name*	*Scale*	*Unit*	*Description*
0	U1	type	-	-	Message type (0x06 for this type)
1	U1	version	-	-	Message version (0x00 for this version)
2	U1[2]	reserved0	-	-	Reserved
4	I1	alpha0	2^-30	s	Ionospheric parameter alpha0
5	I1	alpha1	2^-27	s/pi	Ionospheric parameter alpha1
6	I1	alpha2	2^-24	s/pi^2	Ionospheric parameter alpha2
7	I1	alpha3	2^-24	s/pi^3	Ionospheric parameter alpha3
8	I1	beta0	2^11	s	Ionospheric parameter beta0
9	I1	beta1	2^14	s/pi	Ionospheric parameter beta1
10	I1	beta2	2^16	s/pi^2	Ionospheric parameter beta2
11	I1	beta3	2^16	s/pi^3	Ionospheric parameter beta3
12	U1[4]	reserved1	-	-	Reserved

3.13.4 UBX-MGA-DBD (0x13 0x80)

3.13.4.1 Poll the navigation database

Message	**UBX-MGA-DBD** **Poll the navigation database**					
Type	Poll request					
Comment	Poll the whole navigation data base. The receiver will send all available data from its internal database. The receiver will indicate the finish of the transmission with a UBX-MGA-ACK. The msgPayloadStart field of the UBX-MGA-ACK message will contain a U4 representing the number of UBX-MGA-DBD-DATA* messages sent.					
Message structure	*Header*	*Class*	*ID*	*Length (Bytes)*	*Payload*	*Checksum*
	0xb5 0x62	0x13	0x80	0	*see below*	CK_A CK_B
Payload	This message has no payload.					

CONFIDENTIAL

3.13.4.2 Navigation database dump entry

Message	**UBX-MGA-DBD** **Navigation database dump entry**					
Type	Input/output					
Comment	Navigation database entry. The data fields are firmware-specific. Transmission of this type of message will be acknowledged by UBX-MGA-ACK messages, if acknowledgment has been enabled. See the section AssistNow online in Integration manual for details. The maximum payload size for firmware 2.01 onwards is 164 bytes (which makes the maximum message size 172 bytes). ☞ UBX-MGA-DBD messages are only intended to be sent back to the same receiver that generated them.					
Message structure	*Header*	*Class*	*ID*	*Length (Bytes)*	*Payload*	*Checksum*
	0xb5 0x62	0x13	0x80	12 + [0..n]	*see below*	CK_A CK_B

Payload description:

Byte offset	*Type*	*Name*	*Scale*	*Unit*	*Description*
0	U1[12]	`reserved0`	-	-	Reserved
Start of repeated group (N times)					
12 + n	U1	`data`	-	-	firmware-specific data
End of repeated group (N times)					

3.13.5 UBX-MGA-GAL (0x13 0x02)

3.13.5.1 Galileo ephemeris assistance

Message	**UBX-MGA-GAL-EPH** **Galileo ephemeris assistance**					
Type	Input					
Comment	This message allows the delivery of Galileo ephemeris assistance to a receiver. See the section AssistNow online in Integration manual for details.					
Message structure	*Header*	*Class*	*ID*	*Length (Bytes)*	*Payload*	*Checksum*
	0xb5 0x62	0x13	0x02	76	*see below*	CK_A CK_B

Payload description:

Byte offset	*Type*	*Name*	*Scale*	*Unit*	*Description*
0	U1	`type`	-	-	Message type (0x01 for this type)
1	U1	`version`	-	-	Message version (0x00 for this version)
2	U1	`svId`	-	-	Galileo Satellite identifier (see Satellite Numbering)
3	U1	`reserved0`	-	-	Reserved
4	U2	`iodNav`	-	-	Ephemeris and clock correction Issue of Data
6	I2	`deltaN`	2^-43	semi-circles/s	Mean motion difference from computed value
8	I4	`m0`	2^-31	semi-circles	Mean anomaly at reference time
12	U4	`e`	2^-33	-	Eccentricity
16	U4	`sqrtA`	2^-19	m^0.5	Square root of the semi-major axis
20	I4	`omega0`	2^-31	semi-circles	Longitude of ascending node of orbital plane at weekly epoch
24	I4	`i0`	2^-31	semi-circles	Inclination angle at reference time

CONFIDENTIAL

28	I4	omega	2^-31	semi-circles	Argument of perigee
32	I4	omegaDot	2^-43	semi-circles/s	Rate of change of right ascension
36	I2	iDot	2^-43	semi-circles/s	Rate of change of inclination angle
38	I2	cuc	2^-29	radians	Amplitude of the cosine harmonic correction term to the argument of latitude
40	I2	cus	2^-29	radians	Amplitude of the sine harmonic correction term to the argument of latitude
42	I2	crc	2^-5	radians	Amplitude of the cosine harmonic correction term to the orbit radius
44	I2	crs	2^-5	radians	Amplitude of the sine harmonic correction term to the orbit radius
46	I2	cic	2^-29	radians	Amplitude of the cosine harmonic correction term to the angle of inclination
48	I2	cis	2^-29	radians	Amplitude of the sine harmonic correction term to the angle of inclination
50	U2	toe	60	s	Ephemeris reference time
52	I4	af0	2^-34	s	SV clock bias correction coefficient
56	I4	af1	2^-46	s/s	SV clock drift correction coefficient
60	I1	af2	2^-59	s/s squared	SV clock drift rate correction coefficient
61	U1	sisaIndexE1E5b	-	-	Signal-In-Space Accuracy index for dual frequency E1-E5b
62	U2	toc	60	s	Clock correction data reference Time of Week
64	I2	bgdE1E5b	-	-	E1-E5b Broadcast Group Delay
66	U1[2]	reserved1	-	-	Reserved
68	U1	healthE1B	-	-	E1-B Signal Health Status
69	U1	dataValidityE1B	-	-	E1-B Data Validity Status
70	U1	healthE5b	-	-	E5b Signal Health Status
71	U1	dataValidityE5b	-	-	E5b Data Validity Status
72	U1[4]	reserved2	-	-	Reserved

3.13.5.2 Galileo almanac assistance

Message	**UBX-MGA-GAL-ALM** **Galileo almanac assistance**					
Type	Input					
Comment	This message allows the delivery of Galileo almanac assistance to a receiver. See the section AssistNow online in Integration manual for details.					
Message structure	*Header*	*Class*	*ID*	*Length (Bytes)*	*Payload*	*Checksum*
	0xb5 0x62	0x13	0x02	32	*see below*	CK_A CK_B

Payload description:

Byte offset	*Type*	*Name*	*Scale*	*Unit*	*Description*
0	U1	type	-	-	Message type (0x02 for this type)
1	U1	version	-	-	Message version (0x00 for this version)

CONFIDENTIAL

2	U1	svId	-	-	Galileo Satellite identifier (see Satellite Numbering)
3	U1	reserved0	-	-	Reserved
4	U1	ioda	-	-	Almanac Issue of Data
5	U1	almWNa	-	week	Almanac reference week number
6	U2	toa	600	s	Almanac reference time
8	I2	deltaSqrtA	2^-9	m^0.5	Difference with respect to the square root of the nominal semi-major axis (29 600 km)
10	U2	e	2^-16	-	Eccentricity
12	I2	deltaI	2^-14	semi-circles	Inclination at reference time relative to i0 = 56 degree
14	I2	omega0	2^-15	semi-circles	Longitude of ascending node of orbital plane at weekly epoch
16	I2	omegaDot	2^-33	semi-circles/s	Rate of change of right ascension
18	I2	omega	2^-15	semi-circles	Argument of perigee
20	I2	m0	2^-15	semi-circles	Satellite mean anomaly at reference time
22	I2	af0	2^-19	s	Satellite clock correction bias 'truncated'
24	I2	af1	2^-38	s/s	Satellite clock correction linear 'truncated'
26	U1	healthE1B	-	-	Satellite E1-B signal health status
27	U1	healthE5b	-	-	Satellite E5b signal health status
28	U1[4]	reserved1	-	-	Reserved

3.13.5.3 Galileo GPS time offset assistance

Message	**UBX-MGA-GAL-TIMEOFFSET** **Galileo GPS time offset assistance**					
Type	Input					
Comment	This message allows the delivery of Galileo time to GPS time offset. See the section AssistNow online in Integration manual for details.					
Message structure	*Header*	*Class*	*ID*	*Length (Bytes)*	*Payload*	*Checksum*
	0xb5 0x62	0x13	0x02	12	*see below*	CK_A CK_B

Payload description:

Byte offset	*Type*	*Name*	*Scale*	*Unit*	*Description*
0	U1	type	-	-	Message type (0x03 for this type)
1	U1	version	-	-	Message version (0x00 for this version)
2	U1[2]	reserved0	-	-	Reserved
4	I2	a0G	2^-35	s	Constant term of the polynomial describing the offset
6	I2	a1G	2^-51	s/s	Rate of change of the offset
8	U1	t0G	3600	s	DReference time for GGTO data
9	U1	wn0G	-	weeks	Week Number of GGTO reference
10	U1[2]	reserved1	-	-	Reserved

CONFIDENTIAL

3.13.5.4 Galileo UTC assistance

Message	**UBX-MGA-GAL-UTC** **Galileo UTC assistance**					
Type	Input					
Comment	This message allows the delivery of Galileo UTC assistance to a receiver. See the section AssistNow online in Integration manual for details.					
Message structure	*Header*	*Class*	*ID*	*Length (Bytes)*	*Payload*	*Checksum*
	0xb5 0x62	0x13	0x02	20	*see below*	CK_A CK_B

Payload description:

Byte offset	*Type*	*Name*	*Scale*	*Unit*	*Description*
0	U1	`type`	-	-	Message type (0x05 for this type)
1	U1	`version`	-	-	Message version (0x00 for this version)
2	U1[2]	`reserved0`	-	-	Reserved
4	I4	`a0`	2^-30	s	First parameter of UTC polynomial
8	I4	`a1`	2^-50	s/s	Second parameter of UTC polynomial
12	I1	`dtLS`	-	s	Delta time due to current leap seconds
13	U1	`tot`	3600	s	UTC parameters reference time of week (Galileo time)
14	U1	`wnt`	-	weeks	UTC parameters reference week number (the 8-bit WNt field)
15	U1	`wnLSF`	-	weeks	Week number at the end of which the future leap second becomes effective (the 8-bit WNLSF field)
16	U1	`dN`	-	days	Day number at the end of which the future leap second becomes effective
17	I1	`dTLSF`	-	s	Delta time due to future leap seconds
18	U1[2]	`reserved1`	-	-	Reserved

3.13.6 UBX-MGA-GLO (0x13 0x06)

3.13.6.1 GLONASS ephemeris assistance

Message	**UBX-MGA-GLO-EPH** **GLONASS ephemeris assistance**					
Type	Input					
Comment	This message allows the delivery of GLONASS ephemeris assistance to a receiver. See the section AssistNow online in Integration manual for details.					
Message structure	*Header*	*Class*	*ID*	*Length (Bytes)*	*Payload*	*Checksum*
	0xb5 0x62	0x13	0x06	48	*see below*	CK_A CK_B

Payload description:

Byte offset	*Type*	*Name*	*Scale*	*Unit*	*Description*
0	U1	`type`	-	-	Message type (0x01 for this type)
1	U1	`version`	-	-	Message version (0x00 for this version)
2	U1	`svId`	-	-	GLONASS Satellite identifier (see Satellite Numbering)
3	U1	`reserved0`	-	-	Reserved
4	U1	`FT`	-	-	User range accuracy
5	U1	`B`	-	-	Health flag from string 2

CONFIDENTIAL

6	U1	M	-	-	Type of GLONASS satellite (1 indicates GLONASS-M)
7	I1	H	-	-	Carrier frequency number of navigation RF signal, Range=(-7 .. 6), -128 for unknown
8	I4	x	2^-11	km	X component of the SV position in PZ-90.02 coordinate System
12	I4	y	2^-11	km	Y component of the SV position in PZ-90.02 coordinate System
16	I4	z	2^-11	km	Z component of the SV position in PZ-90.02 coordinate System
20	I4	dx	2^-20	km/s	X component of the SV velocity in PZ-90.02 coordinate System
24	I4	dy	2^-20	km/s	Y component of the SV velocity in PZ-90.02 coordinate System
28	I4	dz	2^-20	km/s	Z component of the SV velocity in PZ-90.02 coordinate System
32	I1	ddx	2^-30	km/s^2	X component of the SV acceleration in PZ-90.02 coordinate System
33	I1	ddy	2^-30	km/s^2	Y component of the SV acceleration in PZ-90.02 coordinate System
34	I1	ddz	2^-30	km/s^2	Z component of the SV acceleration in PZ-90.02 coordinate System
35	U1	tb	15	minutes	Index of a time interval within current day according to UTC(SU)
36	I2	gamma	2^-40	-	Relative carrier frequency deviation
38	U1	E	-	days	Ephemeris data age indicator
39	I1	deltaTau	2^-30	s	Time difference between L2 and L1 band
40	I4	tau	2^-30	s	SV clock bias
44	U1[4]	reserved1	-	-	Reserved

3.13.6.2 GLONASS almanac assistance

Message	**UBX-MGA-GLO-ALM** **GLONASS almanac assistance**					
Type	Input					
Comment	This message allows the delivery of GLONASS almanac assistance to a receiver. See the section AssistNow online in Integration manual for details.					
Message structure	*Header*	*Class*	*ID*	*Length (Bytes)*	*Payload*	*Checksum*
	0xb5 0x62	0x13	0x06	36	*see below*	CK_A CK_B

Payload description:

Byte offset	*Type*	*Name*	*Scale*	*Unit*	*Description*
0	U1	type	-	-	Message type (0x02 for this type)
1	U1	version	-	-	Message version (0x00 for this version)
2	U1	svId	-	-	GLONASS Satellite identifier (see Satellite Numbering)
3	U1	reserved0	-	-	Reserved
4	U2	N	-	days	Reference calender day number of almanac within the four-year period (from string 5)
6	U1	M	-	-	Type of GLONASS satellite (1 indicates GLONASS-M)

CONFIDENTIAL

7	U1	C	-	-	Unhealthy flag at instant of almanac upload (1 indicates operability of satellite)
8	I2	tau	2^-18	s	Coarse time correction to GLONASS time
10	U2	epsilon	2^-20	-	Eccentricity
12	I4	lambda	2^-20	semi-circles	Longitude of the first (within the N-day) ascending node of satellite orbit in PC-90.02 coordinate system
16	I4	deltaI	2^-20	semi-circles	Correction to the mean value of inclination
20	U4	tLambda	2^-5	s	Time of the first ascending node passage
24	I4	deltaT	2^-9	s/orbital-period	Correction to the mean value of Draconian period
28	I1	deltaDT	2^-14	s/orbital-period^2	Rate of change of Draconian period
29	I1	H	-	-	Carrier frequency number of navigation RF signal, Range=(-7 .. 6)
30	I2	omega	-	-	Argument of perigee
32	U1[4]	reserved1	-	-	Reserved

3.13.6.3 GLONASS auxiliary time offset assistance

Message	**UBX-MGA-GLO-TIMEOFFSET** **GLONASS auxiliary time offset assistance**					
Type	Input					
Comment	This message allows the delivery of auxiliary GLONASS assistance (including the GLONASS time offsets to other GNSS systems) to a receiver. See the section AssistNow online in Integration manual for details.					
Message structure	*Header*	*Class*	*ID*	*Length (Bytes)*	*Payload*	*Checksum*
	0xb5 0x62	0x13	0x06	20	*see below*	CK_A CK_B

Payload description:

Byte offset	*Type*	*Name*	*Scale*	*Unit*	*Description*
0	U1	type	-	-	Message type (0x03 for this type)
1	U1	version	-	-	Message version (0x00 for this version)
2	U2	N	-	days	Reference calendar day number within the four-year period of almanac (from string 5)
4	I4	tauC	2^-27	s	Time scale correction to UTC(SU) time
8	I4	tauGps	2^-31	s	Correction to GPS time relative to GLONASS time
12	I2	B1	2^-10	s	Coefficient to determine delta UT1
14	I2	B2	2^-16	s/msd	Rate of change of delta UT1
16	U1[4]	reserved0	-	-	Reserved

3.13.7 UBX-MGA-GPS (0x13 0x00)

3.13.7.1 GPS ephemeris assistance

Message	**UBX-MGA-GPS-EPH** **GPS ephemeris assistance**
Type	Input
Comment	This message allows the delivery of GPS ephemeris assistance to a receiver. See the section AssistNow online in Integration manual for details.

CONFIDENTIAL

Message structure	Header	Class	ID	Length (Bytes)	Payload	Checksum
	0xb5 0x62	0x13	0x00	68	see below	CK_A CK_B

Payload description:

Byte offset	Type	Name	Scale	Unit	Description
0	U1	`type`	-	-	Message type (0x01 for this type)
1	U1	`version`	-	-	Message version (0x00 for this version)
2	U1	`svId`	-	-	GPS Satellite identifier (see Satellite Numbering)
3	U1	`reserved0`	-	-	Reserved
4	U1	`fitInterval`	-	-	Fit interval flag
5	U1	`uraIndex`	-	-	URA index
6	U1	`svHealth`	-	-	SV health
7	I1	`tgd`	2^-31	s	Group delay differential
8	U2	`iodc`	-	-	IODC
10	U2	`toc`	2^4	s	Clock data reference time
12	U1	`reserved1`	-	-	Reserved
13	I1	`af2`	2^-55	s/s squared	Time polynomial coefficient 2
14	I2	`af1`	2^-43	s/s	Time polynomial coefficient 1
16	I4	`af0`	2^-31	s	Time polynomial coefficient 0
20	I2	`crs`	2^-5	m	Crs
22	I2	`deltaN`	2^-43	semi-circles/s	Mean motion difference from computed value
24	I4	`m0`	2^-31	semi-circles	Mean anomaly at reference time
28	I2	`cuc`	2^-29	radians	Amplitude of cosine harmonic correction term to argument of latitude
30	I2	`cus`	2^-29	radians	Amplitude of sine harmonic correction term to argument of latitude
32	U4	`e`	2^-33	-	Eccentricity
36	U4	`sqrtA`	2^-19	m^0.5	Square root of the semi-major axis
40	U2	`toe`	2^4	s	Reference time of ephemeris
42	I2	`cic`	2^-29	radians	Amplitude of cos harmonic correction term to angle of inclination
44	I4	`omega0`	2^-31	semi-circles	Longitude of ascending node of orbit plane at weekly epoch
48	I2	`cis`	2^-29	radians	Amplitude of sine harmonic correction term to angle of inclination
50	I2	`crc`	2^-5	m	Amplitude of cosine harmonic correction term to orbit radius
52	I4	`i0`	2^-31	semi-circles	Inclination angle at reference time
56	I4	`omega`	2^-31	semi-circles	Argument of perigee
60	I4	`omegaDot`	2^-43	semi-circles/s	Rate of right ascension
64	I2	`idot`	2^-43	semi-circles/s	Rate of inclination angle

CONFIDENTIAL

66	U1[2]	reserved2	-	-	Reserved

3.13.7.2 GPS almanac assistance

Message	**UBX-MGA-GPS-ALM** **GPS almanac assistance**					
Type	Input					
Comment	This message allows the delivery of GPS almanac assistance to a receiver. See the section AssistNow online in Integration manual for details.					
Message structure	*Header*	*Class*	*ID*	*Length (Bytes)*	*Payload*	*Checksum*
	0xb5 0x62	0x13	0x00	36	*see below*	CK_A CK_B

Payload description:

Byte offset	*Type*	*Name*	*Scale*	*Unit*	*Description*
0	U1	type	-	-	Message type (0x02 for this type)
1	U1	version	-	-	Message version (0x00 for this version)
2	U1	svId	-	-	GPS Satellite identifier (see Satellite Numbering)
3	U1	svHealth	-	-	SV health information
4	U2	e	2^-21	-	Eccentricity
6	U1	almWNa	-	week	Reference week number of almanac (the 8-bit WNa field)
7	U1	toa	2^12	s	Reference time of almanac
8	I2	deltaI	2^-19	semi-circles	Delta inclination angle at reference time
10	I2	omegaDot	2^-38	semi-circles/s	Rate of right ascension
12	U4	sqrtA	2^-11	m^0.5	Square root of the semi-major axis
16	I4	omega0	2^-23	semi-circles	Longitude of ascending node of orbit plane
20	I4	omega	2^-23	semi-circles	Argument of perigee
24	I4	m0	2^-23	semi-circles	Mean anomaly at reference time
28	I2	af0	2^-20	s	Time polynomial coefficient 0 (8 MSBs)
30	I2	af1	2^-38	s/s	Time polynomial coefficient 1
32	U1[4]	reserved0	-	-	Reserved

3.13.7.3 GPS health assistance

Message	**UBX-MGA-GPS-HEALTH** **GPS health assistance**					
Type	Input					
Comment	This message allows the delivery of GPS health assistance to a receiver. See the section AssistNow online in Integration manual for details.					
Message structure	*Header*	*Class*	*ID*	*Length (Bytes)*	*Payload*	*Checksum*
	0xb5 0x62	0x13	0x00	40	*see below*	CK_A CK_B

Payload description:

Byte offset	*Type*	*Name*	*Scale*	*Unit*	*Description*
0	U1	type	-	-	Message type (0x04 for this type)
1	U1	version	-	-	Message version (0x00 for this version)

CONFIDENTIAL

2	U1[2]	reserved0	-	-	Reserved
4	U1[32]	healthCode	-	-	Each byte represents a GPS SV (1-32). The 6 LSBs of each byte contains the 6 bit health code from subframes 4/5 page 25.
36	U1[4]	reserved1	-	-	Reserved

3.13.7.4 GPS UTC assistance

Message	**UBX-MGA-GPS-UTC** **GPS UTC assistance**					
Type	Input					
Comment	This message allows the delivery of GPS UTC assistance to a receiver. See the section AssistNow online in Integration manual for details.					
Message structure	*Header*	*Class*	*ID*	*Length (Bytes)*	*Payload*	*Checksum*
	0xb5 0x62	0x13	0x00	20	*see below*	CK_A CK_B

Payload description:

Byte offset	*Type*	*Name*	*Scale*	*Unit*	*Description*
0	U1	type	-	-	Message type (0x05 for this type)
1	U1	version	-	-	Message version (0x00 for this version)
2	U1[2]	reserved0	-	-	Reserved
4	I4	utcA0	2^-30	s	First parameter of UTC polynomial
8	I4	utcA1	2^-50	s/s	Second parameter of UTC polynomial
12	I1	utcDtLS	-	s	Delta time due to current leap seconds
13	U1	utcTot	2^12	s	UTC parameters reference time of week (GPS time)
14	U1	utcWNt	-	weeks	UTC parameters reference week number (the 8-bit WNt field)
15	U1	utcWNlsf	-	weeks	Week number at the end of which the future leap second becomes effective (the 8-bit WNLSF field)
16	U1	utcDn	-	days	Day number at the end of which the future leap second becomes effective
17	I1	utcDtLSF	-	s	Delta time due to future leap seconds
18	U1[2]	reserved1	-	-	Reserved

3.13.7.5 GPS ionosphere assistance

Message	**UBX-MGA-GPS-IONO** **GPS ionosphere assistance**					
Type	Input					
Comment	This message allows the delivery of GPS ionospheric assistance to a receiver. See the section AssistNow online in Integration manual for details.					
Message structure	*Header*	*Class*	*ID*	*Length (Bytes)*	*Payload*	*Checksum*
	0xb5 0x62	0x13	0x00	16	*see below*	CK_A CK_B

Payload description:

Byte offset	*Type*	*Name*	*Scale*	*Unit*	*Description*
0	U1	type	-	-	Message type (0x06 for this type)
1	U1	version	-	-	Message version (0x00 for this version)
2	U1[2]	reserved0	-	-	Reserved
4	I1	ionoAlpha0	2^-30	s	Ionospheric parameter alpha0 [s]

CONFIDENTIAL

5	I1	ionoAlpha1	2^-27	s/semi-circle	Ionospheric parameter alpha1 [s/semi-circle]
6	I1	ionoAlpha2	2^-24	s/(semi-circle^2)	Ionospheric parameter alpha2 [s/semi-circle^2]
7	I1	ionoAlpha3	2^-24	s/(semi-circle^3)	Ionospheric parameter alpha3 [s/semi-circle^3]
8	I1	ionoBeta0	2^11	s	Ionospheric parameter beta0 [s]
9	I1	ionoBeta1	2^14	s/semi-circle	Ionospheric parameter beta1 [s/semi-circle]
10	I1	ionoBeta2	2^16	s/(semi-circle^2)	Ionospheric parameter beta2 [s/semi-circle^2]
11	I1	ionoBeta3	2^16	s/(semi-circle^3)	Ionospheric parameter beta3 [s/semi-circle^3]
12	U1[4]	reserved1	-	-	Reserved

3.13.8 UBX-MGA-INI (0x13 0x40)

3.13.8.1 Initial position assistance

Message	**UBX-MGA-INI-POS_XYZ** **Initial position assistance**
Type	Input
Comment	This message allows the delivery of initial position assistance to a receiver in cartesian ECEF coordinates. This message is equivalent to the UBX-MGA-INI-POS_LLH message, except for the coordinate system. See the section AssistNow online in Integration manual for details. ☞ Supplying position assistance that is inaccurate by more than the specified position accuracy, may lead to substantially degraded receiver performance.

Message structure	*Header*	*Class*	*ID*	*Length (Bytes)*	*Payload*	*Checksum*
	0xb5 0x62	0x13	0x40	20	*see below*	CK_A CK_B

Payload description:

Byte offset	*Type*	*Name*	*Scale*	*Unit*	*Description*
0	U1	type	-	-	Message type (0x00 for this type)
1	U1	version	-	-	Message version (0x00 for this version)
2	U1[2]	reserved0	-	-	Reserved
4	I4	ecefX	-	cm	WGS84 ECEF X coordinate
8	I4	ecefY	-	cm	WGS84 ECEF Y coordinate
12	I4	ecefZ	-	cm	WGS84 ECEF Z coordinate
16	U4	posAcc	-	cm	Position accuracy (stddev)

3.13.8.2 Initial position assistance

Message	**UBX-MGA-INI-POS_LLH** **Initial position assistance**
Type	Input
Comment	This message allows the delivery of initial position assistance to a receiver in WGS84 lat/long/alt coordinates. This message is equivalent to the UBX-MGA-INI-POS_XYZ message, except for the coordinate system. See the section AssistNow online in Integration manual for details. ☞ Supplying position assistance that is inaccurate by more than the specified position accuracy, may lead to substantially degraded receiver performance.

CONFIDENTIAL

Message structure	Header	Class	ID	Length (Bytes)	Payload	Checksum
	0xb5 0x62	0x13	0x40	20	*see below*	CK_A CK_B

Payload description:

Byte offset	Type	Name	Scale	Unit	Description
0	U1	`type`	-	-	Message type (0x01 for this type)
1	U1	`version`	-	-	Message version (0x00 for this version)
2	U1[2]	`reserved0`	-	-	Reserved
4	I4	`lat`	1e-7	deg	WGS84 Latitude
8	I4	`lon`	1e-7	deg	WGS84 Longitude
12	I4	`alt`	-	cm	WGS84 Altitude
16	U4	`posAcc`	-	cm	Position accuracy (stddev)

3.13.8.3 Initial time assistance

Message	**UBX-MGA-INI-TIME_UTC** **Initial time assistance**
Type	Input
Comment	This message allows the delivery of UTC time assistance to a receiver. This message is equivalent to the UBX-MGA-INI-TIME_GNSS message, except for the time base. See the section AssistNow online in Integration manual for details. ☞ Supplying time assistance that is inaccurate by more than the specified time accuracy, may lead to substantially degraded receiver performance.

Message structure	Header	Class	ID	Length (Bytes)	Payload	Checksum
	0xb5 0x62	0x13	0x40	24	*see below*	CK_A CK_B

Payload description:

Byte offset	Type	Name	Scale	Unit	Description
0	U1	`type`	-	-	Message type (0x10 for this type)
1	U1	`version`	-	-	Message version (0x00 for this version)
2	X1	`ref`	-	-	Reference to be used to set time
bits 3...0	$U_{:4}$	`source`	-	-	• 0 = none, i.e. on receipt of message (will be inaccurate!) • 1 = relative to pulse sent to EXTINT0 • 2 = relative to pulse sent to EXTINT1 • 3-15 = reserved
bit 4	$U_{:1}$	`fall`	-	-	use falling edge of EXTINT pulse (default rising) - only if source is EXTINT
bit 5	$U_{:1}$	`last`	-	-	use last EXTINT pulse (default next pulse) - only if source is EXTINT
3	I1	`leapSecs`	-	s	Number of leap seconds since 1980 (or 0x80 = -128 if unknown)
4	U2	`year`	-	-	Year
6	U1	`month`	-	-	Month, starting at 1
7	U1	`day`	-	-	Day, starting at 1
8	U1	`hour`	-	-	Hour, from 0 to 23
9	U1	`minute`	-	-	Minute, from 0 to 59
10	U1	`second`	-	s	Seconds, from 0 to 59
11	U1	`reserved0`	-	-	Reserved

CONFIDENTIAL

12	U4	ns	-	ns	Nanoseconds, from 0 to 999,999,999
16	U2	tAccS	-	s	Seconds part of time accuracy
18	U1[2]	reserved1	-	-	Reserved
20	U4	tAccNs	-	ns	Nanoseconds part of time accuracy, from 0 to 999,999,999

3.13.8.4 Initial time assistance

Message	**UBX-MGA-INI-TIME_GNSS** **Initial time assistance**
Type	Input
Comment	This message allows the delivery of time assistance to a receiver in a chosen GNSS timebase. This message is equivalent to the UBX-MGA-INI-TIME_UTC message, except for the time base. See the section AssistNow online in Integration manual for details. ☞ Supplying time assistance that is inaccurate by more than the specified time accuracy, may lead to substantially degraded receiver performance.

Message structure	*Header*	*Class*	*ID*	*Length (Bytes)*	*Payload*	*Checksum*
	0xb5 0x62	0x13	0x40	24	*see below*	CK_A CK_B

Payload description:

Byte offset	*Type*	*Name*	*Scale*	*Unit*	*Description*
0	U1	type	-	-	Message type (0x11 for this type)
1	U1	version	-	-	Message version (0x00 for this version)
2	X1	ref	-	-	Reference to be used to set time
bits 3...0	U:4	source	-	-	• 0 = none, i.e. on receipt of message (will be inaccurate!) • 1 = relative to pulse sent to EXTINT0 • 2 = relative to pulse sent to EXTINT1 • 3-15 = reserved
bit 4	U:1	fall	-	-	use falling edge of EXTINT pulse (default rising) - only if source is EXTINT
bit 5	U:1	last	-	-	use last EXTINT pulse (default next pulse) - only if source is EXTINT
3	U1	gnssId	-	-	Source of time information. Currently supported: • 0 = GPS time • 2 = Galileo time • 3 = BeiDou time • 6 = GLONASS time: week = 834 + ((N4-1)*1461 + Nt)/7, tow = (((N4-1)*1461 + Nt) % 7) * 86400 + tod
4	U1[2]	reserved0	-	-	Reserved
6	U2	week	-	-	GNSS week number
8	U4	tow	-	s	GNSS time of week
12	U4	ns	-	ns	GNSS time of week, nanosecond part from 0 to 999,999,999
16	U2	tAccS	-	s	Seconds part of time accuracy
18	U1[2]	reserved1	-	-	Reserved
20	U4	tAccNs	-	ns	Nanoseconds part of time accuracy, from 0 to 999,999,999

CONFIDENTIAL

3.13.8.5 Initial clock drift assistance

Message	**UBX-MGA-INI-CLKD** **Initial clock drift assistance**
Type	Input
Comment	This message allows the delivery of clock drift assistance to a receiver. See the section AssistNow online in Integration manual for details. ☞ Supplying clock drift assistance that is inaccurate by more than the specified accuracy, may lead to substantially degraded receiver performance.

Message structure	*Header*	*Class*	*ID*	*Length (Bytes)*	*Payload*	*Checksum*
	0xb5 0x62	0x13	0x40	12	*see below*	CK_A CK_B

Payload description:

Byte offset	*Type*	*Name*	*Scale*	*Unit*	*Description*
0	U1	`type`	-	-	Message type (0x20 for this type)
1	U1	`version`	-	-	Message version (0x00 for this version)
2	U1[2]	`reserved0`	-	-	Reserved
4	I4	`clkD`	-	ns/s	Clock drift
8	U4	`clkDAcc`	-	ns/s	Clock drift accuracy

3.13.8.6 Initial frequency assistance

Message	**UBX-MGA-INI-FREQ** **Initial frequency assistance**
Type	Input
Comment	This message allows the delivery of external frequency assistance to a receiver. See the section AssistNow online in Integration manual for details. ☞ Supplying external frequency assistance that is inaccurate by more than the specified accuracy, may lead to substantially degraded receiver performance.

Message structure	*Header*	*Class*	*ID*	*Length (Bytes)*	*Payload*	*Checksum*
	0xb5 0x62	0x13	0x40	12	*see below*	CK_A CK_B

Payload description:

Byte offset	*Type*	*Name*	*Scale*	*Unit*	*Description*
0	U1	`type`	-	-	Message type (0x21 for this type)
1	U1	`version`	-	-	Message version (0x00 for this version)
2	U1	`reserved0`	-	-	Reserved
3	X1	`flags`	-	-	Frequency reference
bits 3...0	$U_{:4}$	`source`	-	-	• 0 = frequency available on EXTINT0 • 1 = frequency available on EXTINT1 • 2-15 = reserved
bit 4	$U_{:1}$	`fall`	-	-	use falling edge of EXTINT pulse (default rising)
4	I4	`freq`	1e-2	Hz	Frequency
8	U4	`freqAcc`	-	ppb	Frequency accuracy

3.13.8.7 Earth orientation parameters assistance

Message	**UBX-MGA-INI-EOP** **Earth orientation parameters assistance**
Type	Input

CONFIDENTIAL

Comment	This message allows the delivery of new earth orientation parameters (EOP) to a receiver to improve AssistNow Autonomous operation.					
Message structure	*Header*	*Class*	*ID*	*Length (Bytes)*	*Payload*	*Checksum*
	0xb5 0x62	0x13	0x40	72	*see below*	CK_A CK_B

Payload description:

Byte offset	*Type*	*Name*	*Scale*	*Unit*	*Description*
0	U1	`type`	-	-	Message type (0x30 for this type)
1	U1	`version`	-	-	Message version (0x00 for this version)
2	U1[2]	`reserved0`	-	-	Reserved
4	U2	`d2kRef`	-	d	reference time (days since 1.1.2000 12.00h UTC)
6	U2	`d2kMax`	-	d	expiration time (days since 1.1.2000 12.00h UTC)
8	I4	`xpP0`	2^-30	arcsec	x_p t^0 polynomial term (offset)
12	I4	`xpP1`	2^-30	arcsec/d	x_p t^1 polynomial term (drift)
16	I4	`ypP0`	2^-30	arcsec	y_p t^0 polynomial term (offset)
20	I4	`ypP1`	2^-30	arcsec/d	y_p t^1 polynomial term (drift)
24	I4	`dUT1`	2^-25	s	dUT1 t^0 polynomial term (offset)
28	I4	`ddUT1`	2^-30	s/d	dUT1 t^1 polynomial term (drift)
32	U1[40]	`reserved1`	-	-	Reserved

3.13.9 UBX-MGA-QZSS (0x13 0x05)

3.13.9.1 QZSS ephemeris assistance

Message	**UBX-MGA-QZSS-EPH** **QZSS ephemeris assistance**					
Type	Input					
Comment	This message allows the delivery of QZSS ephemeris assistance to a receiver. See the section AssistNow online in Integration manual for details.					
Message structure	*Header*	*Class*	*ID*	*Length (Bytes)*	*Payload*	*Checksum*
	0xb5 0x62	0x13	0x05	68	*see below*	CK_A CK_B

Payload description:

Byte offset	*Type*	*Name*	*Scale*	*Unit*	*Description*
0	U1	`type`	-	-	Message type (0x01 for this type)
1	U1	`version`	-	-	Message version (0x00 for this version)
2	U1	`svId`	-	-	QZSS Satellite identifier (see Satellite Numbering), Range 1-5
3	U1	`reserved0`	-	-	Reserved
4	U1	`fitInterval`	-	-	Fit interval flag
5	U1	`uraIndex`	-	-	URA index
6	U1	`svHealth`	-	-	SV health
7	I1	`tgd`	2^-31	s	Group delay differential
8	U2	`iodc`	-	-	IODC
10	U2	`toc`	2^4	s	Clock data reference time
12	U1	`reserved1`	-	-	Reserved

CONFIDENTIAL

13	I1	af2	2^-55	s/s squared	Time polynomial coefficient 2
14	I2	af1	2^-43	s/s	Time polynomial coefficient 1
16	I4	af0	2^-31	s	Time polynomial coefficient 0
20	I2	crs	2^-5	m	Crs
22	I2	deltaN	2^-43	semi-circles/s	Mean motion difference from computed value
24	I4	m0	2^-31	semi-circles	Mean anomaly at reference time
28	I2	cuc	2^-29	radians	Amp of cosine harmonic corr term to arg of lat
30	I2	cus	2^-29	radians	Amp of sine harmonic corr term to arg of lat
32	U4	e	2^-33	-	eccentricity
36	U4	sqrtA	2^-19	m^0.5	Square root of the semi-major axis A
40	U2	toe	2^4	s	Reference time of ephemeris
42	I2	cic	2^-29	radians	Amp of cos harmonic corr term to angle of inclination
44	I4	omega0	2^-31	semi-circles	Long of asc node of orbit plane at weekly epoch
48	I2	cis	2^-29	radians	Amp of sine harmonic corr term to angle of inclination
50	I2	crc	2^-5	m	Amp of cosine harmonic corr term to orbit radius
52	I4	i0	2^-31	semi-circles	Inclination angle at reference time
56	I4	omega	2^-31	semi-circles	Argument of perigee
60	I4	omegaDot	2^-43	semi-circles/s	Rate of right ascension
64	I2	idot	2^-43	semi-circles/s	Rate of inclination angle
66	U1[2]	reserved2	-	-	Reserved

3.13.9.2 QZSS almanac assistance

Message	**UBX-MGA-QZSS-ALM** **QZSS almanac assistance**					
Type	Input					
Comment	This message allows the delivery of QZSS almanac assistance to a receiver. See the section AssistNow online in Integration manual for details.					
Message structure	*Header*	*Class*	*ID*	*Length (Bytes)*	*Payload*	*Checksum*
	0xb5 0x62	0x13	0x05	36	*see below*	CK_A CK_B

Payload description:

Byte offset	*Type*	*Name*	*Scale*	*Unit*	*Description*
0	U1	type	-	-	Message type (0x02 for this type)
1	U1	version	-	-	Message version (0x00 for this version)
2	U1	svId	-	-	QZSS Satellite identifier (see Satellite Numbering), Range 1-5
3	U1	svHealth	-	-	Almanac SV health information
4	U2	e	2^-21	-	Almanac eccentricity
6	U1	almWNa	-	week	Reference week number of almanac (the 8-bit WNa field)

CONFIDENTIAL

7	U1	toa	2^12	s	Reference time of almanac
8	I2	deltaI	2^-19	semi-circles	Delta inclination angle at reference time
10	I2	omegaDot	2^-38	semi-circles/s	Almanac rate of right ascension
12	U4	sqrtA	2^-11	m^0.5	Almanac square root of the semi-major axis A
16	I4	omega0	2^-23	semi-circles	Almanac long of asc node of orbit plane at weekly
20	I4	omega	2^-23	semi-circles	Almanac argument of perigee
24	I4	m0	2^-23	semi-circles	Almanac mean anomaly at reference time
28	I2	af0	2^-20	s	Almanac time polynomial coefficient 0 (8 MSBs)
30	I2	af1	2^-38	s/s	Almanac time polynomial coefficient 1
32	U1[4]	reserved0	-	-	Reserved

3.13.9.3 QZSS health assistance

Message	**UBX-MGA-QZSS-HEALTH** **QZSS health assistance**					
Type	Input					
Comment	This message allows the delivery of QZSS health assistance to a receiver. See the section AssistNow online in Integration manual for details.					
Message structure	*Header*	*Class*	*ID*	*Length (Bytes)*	*Payload*	*Checksum*
	0xb5 0x62	0x13	0x05	12	*see below*	CK_A CK_B

Payload description:

Byte offset	*Type*	*Name*	*Scale*	*Unit*	*Description*
0	U1	type	-	-	Message type (0x04 for this type)
1	U1	version	-	-	Message version (0x00 for this version)
2	U1[2]	reserved0	-	-	Reserved
4	U1[5]	healthCode	-	-	Each byte represents a QZSS SV (1-5). The 6 LSBs of each byte contains the 6 bit health code from subframes 4/5, data ID = 3, SV ID = 51
9	U1[3]	reserved1	-	-	Reserved

3.14 UBX-MON (0x0a)

The messages in the UBX-MON class are used to report the receiver status, such as hardware status or I/O subsystem statistics.

3.14.1 UBX-MON-COMMS (0x0a 0x36)

3.14.1.1 Comm port information

Message	**UBX-MON-COMMS** **Comm port information**
Type	Periodic/polled
Comment	Consolidated communications information for all ports. The size of the message is determined by the number of ports that are in use on the receiver. A port is only included if communication, either send or receive, has been initiated on that port.

CONFIDENTIAL

Message structure	Header	Class	ID	Length (Bytes)	Payload	Checksum
	0xb5 0x62	0x0a	0x36	8 + nPorts·40	*see below*	CK_A CK_B

Payload description:

Byte offset	Type	Name	Scale	Unit	Description
0	U1	`version`	-	-	Message version (0x00 for this version)
1	U1	`nPorts`	-	-	Number of ports included
2	X1	`txErrors`	-	-	TX error bitmask
bit 0	$U_{:1}$	`mem`	-	-	Memory Allocation error
bit 1	$U_{:1}$	`alloc`	-	-	Allocation error (TX buffer full)
3	U1	`reserved0`	-	-	Reserved
4	U1[4]	`protIds`	-		The identifiers of the protocols reported in the msgs array. 0: UBX, 1: NMEA, 2: RTCM2, 5: RTCM3, 0xFF: No protocol reported.
Start of repeated group (`nPorts` times)					
8 + n·40	U2	`portId`	-	-	Unique identifier for the port. See section Communications ports in Integration manual for details.
10 + n·40	U2	`txPending`	-	bytes	Number of bytes pending in transmitter buffer
12 + n·40	U4	`txBytes`	-	bytes	Number of bytes ever sent
16 + n·40	U1	`txUsage`	-	%	Maximum usage transmitter buffer during the last sysmon period
17 + n·40	U1	`txPeakUsage`	-	%	Maximum usage transmitter buffer
18 + n·40	U2	`rxPending`	-	bytes	Number of bytes in receiver buffer
20 + n·40	U4	`rxBytes`	-	bytes	Number of bytes ever received
24 + n·40	U1	`rxUsage`	-	%	Maximum usage receiver buffer during the last sysmon period
25 + n·40	U1	`rxPeakUsage`	-	%	Maximum usage receiver buffer
26 + n·40	U2	`overrunErrs`	-	-	Number of 100 ms timeslots with overrun errors
28 + n·40	U2[4]	`msgs`	-	msg	Number of successfully parsed messages for each protocol. The reported protocols are identified through the protIds field.
36 + n·40	U1[8]	`reserved1`	-	-	Reserved
44 + n·40	U4	`skipped`	-	bytes	Number of skipped bytes
End of repeated group (`nPorts` times)					

3.14.2 UBX-MON-GNSS (0x0a 0x28)

3.14.2.1 Information message major GNSS selection

Message	**UBX-MON-GNSS** **Information message major GNSS selection**
Type	Polled
Comment	This message reports major GNSS selection. It does this by means of bit masks in U1 fields. Each bit in a bit mask corresponds to one major GNSS. Augmentation systems are not reported.

Message structure	Header	Class	ID	Length (Bytes)	Payload	Checksum
	0xb5 0x62	0x0a	0x28	8	*see below*	CK_A CK_B

Payload description:

CONFIDENTIAL

Byte offset	Type	Name	Scale	Unit	Description
0	U1	`version`	-	-	Message version (0x01for this version)
1	X1	`supported`	-	-	A bit mask showing the major GNSS that can be supported by this receiver
bit 0	U:1	`GPSSup`	-	-	GPS is supported
bit 1	U:1	`GlonassSup`	-	-	GLONASS is supported
bit 2	U:1	`BeidouSup`	-	-	BeiDou is supported
bit 3	U:1	`GalileoSup`	-	-	Galileo is supported
2	X1	`defaultGnss`	-	-	A bit mask showing the default major GNSS selection. If the default major GNSS selection is currently configured in the efuse for this receiver, it takes precedence over the default major GNSS selection configured in the executing firmware of this receiver.
bit 0	U:1	`GPSDef`	-	-	GPS is default-enabled
bit 1	U:1	`GlonassDef`	-	-	GLONASS is default-enabled
bit 2	U:1	`BeidouDef`	-	-	BeiDou is default-enabled
bit 3	U:1	`GalileoDef`	-	-	Galileo is default-enabled
3	X1	`enabled`	-	-	A bit mask showing the current major GNSS selection enabled for this receiver
bit 0	U:1	`GPSEna`	-	-	GPS is enabled
bit 1	U:1	`GlonassEna`	-	-	GLONASS is enabled
bit 2	U:1	`BeidouEna`	-	-	BeiDou is enabled
bit 3	U:1	`GalileoEna`	-	-	Galileo is enabled
4	U1	`simultaneous`	-	-	Maximum number of concurrent major GNSS that can be supported by this receiver
5	U1[3]	`reserved0`	-	-	Reserved

3.14.3 UBX-MON-HW (0x0a 0x09)

3.14.3.1 Hardware status

Message	**UBX-MON-HW** **Hardware status**					
Type	Periodic/polled					
Comment	**This message is deprecated in this protocol version. Use** UBX-MON-HW3 **and** UBX-MON-RF **instead.** Status of different aspect of the hardware, such as antenna, PIO/peripheral pins, noise level, automatic gain control (AGC)					
Message structure	*Header*	*Class*	*ID*	*Length (Bytes)*	*Payload*	*Checksum*
	0xb5 0x62	0x0a	0x09	60	*see below*	CK_A CK_B

Payload description:

Byte offset	Type	Name	Scale	Unit	Description
0	X4	`pinSel`	-	-	Mask of pins set as peripheral/PIO
4	X4	`pinBank`	-	-	Mask of pins set as bank A/B
8	X4	`pinDir`	-	-	Mask of pins set as input/output
12	X4	`pinVal`	-	-	Mask of pins value low/high
16	U2	`noisePerMS`	-	-	Noise level as measured by the GPS core

CONFIDENTIAL

18	U2	agcCnt	-	-	AGC monitor (counts SIGHI xor SIGLO, range 0 to 8191)
20	U1	aStatus	-	-	Status of the antenna supervisor state machine (0=INIT, 1=DONTKNOW, 2=OK, 3=SHORT, 4=OPEN)
21	U1	aPower	-	-	Current power status of antenna (0=OFF, 1=ON, 2=DONTKNOW)
22	X1	flags	-	-	Flags
bit 0	U:1	rtcCalib	-	-	RTC is calibrated
bit 1	U:1	safeBoot	-	-	Safeboot mode (0 = inactive, 1 = active)
bits 3...2	U:2	jammingState	-	-	Output from jamming/interference monitor (0 = unknown or feature disabled, 1 = ok - no significant jamming, 2 = warning - interference visible but fix OK, 3 = critical - interference visible and no fix)
bit 4	U:1	xtalAbsent	-	-	RTC xtal has been determined to be absent (not supported for protocol versions less than 18.00)
23	U1	reserved0	-	-	Reserved
24	X4	usedMask	-	-	Mask of pins that are used by the virtual pin manager
28	U1[17]	VP	-	-	Array of pin mappings for each of the 17 physical pins
45	U1	jamInd	-	-	CW jamming indicator, scaled (0 = no CW jamming, 255 = strong CW jamming)
46	U1[2]	reserved1	-	-	Reserved
48	X4	pinIrq	-	-	Mask of pins value using the PIO Irq
52	X4	pullH	-	-	Mask of pins value using the PIO pull high resistor
56	X4	pullL	-	-	Mask of pins value using the PIO pull low resistor

3.14.4 UBX-MON-HW2 (0x0a 0x0b)

3.14.4.1 Extended hardware status

Message	**UBX-MON-HW2** **Extended hardware status**					
Type	Periodic/polled					
Comment	**This message is deprecated in this protocol version. Use** UBX-MON-HW3 **and** UBX-MON-RF **instead.** Status of different aspects of the hardware such as Imbalance, Low-Level Configuration and POST Results. The first four parameters of this message represent the complex signal from the RF front end. The following rules of thumb apply: • The smaller the absolute value of the variable `ofsI` and `ofsQ`, the better. • Ideally, the magnitude of the I-part (`magI`) and the Q-part (`magQ`) of the complex signal should be the same.					
Message structure	*Header*	*Class*	*ID*	*Length (Bytes)*	*Payload*	*Checksum*
	0xb5 0x62	0x0a	0x0b	28	*see below*	CK_A CK_B

Payload description:

Byte offset	*Type*	*Name*	*Scale*	*Unit*	*Description*
0	I1	ofsI	-	-	Imbalance of I-part of complex signal, scaled (-128 = max. negative imbalance, 127 = max. positive imbalance)
1	U1	magI	-	-	Magnitude of I-part of complex signal, scaled (0 = no signal, 255 = max. magnitude)

CONFIDENTIAL

2	I1	`ofsQ`	-	-	Imbalance of Q-part of complex signal, scaled (-128 = max. negative imbalance, 127 = max. positive imbalance)
3	U1	`magQ`	-	-	Magnitude of Q-part of complex signal, scaled (0 = no signal, 255 = max. magnitude)
4	U1	`cfgSource`	-	-	Source of low-level configuration (114 = ROM, 111 = OTP, 112 = config pins, 102 = flash image)
5	U1[3]	`reserved0`	-	-	Reserved
8	U4	`lowLevCfg`	-	-	Low-level configuration (obsolete for protocol versions greater than 15.00)
12	U1[8]	`reserved1`	-	-	Reserved
20	U4	`postStatus`	-	-	POST status word
24	U1[4]	`reserved2`	-	-	Reserved

3.14.5 UBX-MON-HW3 (0x0a 0x37)

3.14.5.1 I/O pin status

Message	**UBX-MON-HW3** **I/O pin status**					
Type	Periodic/polled					
Comment	This message contains information specific to each HW I/O pin, for example whether the pin is set as Input or Output. For the antenna supervisor status and other RF status information, see the UBX-MON-RF message.					
Message structure	*Header*	*Class*	*ID*	*Length (Bytes)*	*Payload*	*Checksum*
	0xb5 0x62	0x0a	0x37	22 + nPins·6	*see below*	CK_A CK_B

Payload description:

Byte offset	*Type*	*Name*	*Scale*	*Unit*	*Description*
0	U1	`version`	-	-	Message version (0x00 for this version)
1	U1	`nPins`	-	-	The number of I/O pins included
2	X1	`flags`	-	-	Flags
bit 0	$U_{:1}$	`rtcCalib`	-	-	RTC is calibrated
bit 1	$U_{:1}$	`safeBoot`	-	-	Safeboot mode (0 = inactive, 1 = active)
bit 2	$U_{:1}$	`xtalAbsent`	-	-	RTC xtal has been determined to be absent
3	CH[10]	`hwVersion`	-	-	Zero-terminated hardware version string (same as that returned in the UBX-MON-VER message)
13	U1[9]	`reserved0`	-	-	Reserved
Start of repeated group (`nPins` times)					
22 + n·6	U2	`pinId`	-	-	Identifier for the pin, including both external and internal pins.
24 + n·6	X2	`pinMask`	-	-	Pin mask
bit 0	$U_{:1}$	`periphPIO`	-	-	Pin is set to peripheral or PIO? 0=Peripheral 1=PIO
bits 3...1	$U_{:3}$	`pinBank`	-	-	Bank the pin belongs to, where 0=A 1=B 2=C 3=D 4=E 5=F 6=G 7=H
bit 4	$U_{:1}$	`direction`	-	-	Pin direction? 0=Input 1=Output
bit 5	$U_{:1}$	`value`	-	-	Pin value? 0=Low 1=High

CONFIDENTIAL

bit 6	U:1	vpManager	-	-	Used by virtual pin manager? 0=No 1=Yes
bit 7	U:1	pioIrq	-	-	Interrupt enabled? 0=No 1=Yes
bit 8	U:1	pioPullHigh	-	-	Using pull high resistor? 0=No 1=Yes
bit 9	U:1	pioPullLow	-	-	Using pull low resistor 0=No 1=Yes
26 + n·6	U1	VP	-	-	Virtual pin mapping
27 + n·6	U1	reserved1	-	-	Reserved
End of repeated group (nPins times)					

3.14.6 UBX-MON-IO (0x0a 0x02)

3.14.6.1 I/O system status

Message	**UBX-MON-IO** **I/O system status**					
Type	Periodic/polled					
Comment	**This message is deprecated in this protocol version. Use** UBX-MON-COMMS **instead.** The size of the message is determined by the number of ports 'N' the receiver supports, i.e. on u-blox 5 the number of ports is 6.					
Message structure	*Header*	*Class*	*ID*	*Length (Bytes)*	*Payload*	*Checksum*
	0xb5 0x62	0x0a	0x02	[0..n]·20	*see below*	CK_A CK_B

Payload description:

Byte offset	*Type*	*Name*	*Scale*	*Unit*	*Description*
Start of repeated group (N times)					
0 + n·20	U4	rxBytes	-	bytes	Number of bytes ever received
4 + n·20	U4	txBytes	-	bytes	Number of bytes ever sent
8 + n·20	U2	parityErrs	-	-	Number of 100 ms timeslots with parity errors
10 + n·20	U2	framingErrs	-	-	Number of 100 ms timeslots with framing errors
12 + n·20	U2	overrunErrs	-	-	Number of 100 ms timeslots with overrun errors
14 + n·20	U2	breakCond	-	-	Number of 100 ms timeslots with break conditions
16 + n·20	U1[4]	reserved0	-	-	Reserved
End of repeated group (N times)					

3.14.7 UBX-MON-MSGPP (0x0a 0x06)

3.14.7.1 Message parse and process status

Message	**UBX-MON-MSGPP** **Message parse and process status**					
Type	Periodic/polled					
Comment	**This message is deprecated in this protocol version. Use** UBX-MON-COMMS **instead.**					
Message structure	*Header*	*Class*	*ID*	*Length (Bytes)*	*Payload*	*Checksum*
	0xb5 0x62	0x0a	0x06	120	*see below*	CK_A CK_B

Payload description:

Byte offset	*Type*	*Name*	*Scale*	*Unit*	*Description*
0	U2[8]	msg1	-	msgs	Number of successfully parsed messages for each protocol on port0

CONFIDENTIAL

16	U2[8]	msg2	-	msgs	Number of successfully parsed messages for each protocol on port1
32	U2[8]	msg3	-	msgs	Number of successfully parsed messages for each protocol on port2
48	U2[8]	msg4	-	msgs	Number of successfully parsed messages for each protocol on port3
64	U2[8]	msg5	-	msgs	Number of successfully parsed messages for each protocol on port4
80	U2[8]	msg6	-	msgs	Number of successfully parsed messages for each protocol on port5
96	U4[6]	skipped	-	bytes	Number skipped bytes for each port

3.14.8 UBX-MON-PATCH (0x0a 0x27)

3.14.8.1 Installed patches

Message	**UBX-MON-PATCH** **Installed patches**					
Type	Polled					
Comment	This message reports information about patches installed and currently enabled on the receiver. It does not report on patches installed and then disabled. An enabled patch is considered active when the receiver executes from the code space where the patch resides on. For example, a ROM patch is reported active only when the system runs from ROM.					
Message structure	*Header*	*Class*	*ID*	*Length (Bytes)*	*Payload*	*Checksum*
	0xb5 0x62	0x0a	0x27	4 + nEntries·16	*see below*	CK_A CK_B

Payload description:

Byte offset	*Type*	*Name*	*Scale*	*Unit*	*Description*
0	U2	version	-	-	Message version (0x0001 for this version)
2	U2	nEntries	-	-	Total number of reported patches
Start of repeated group (nEntries times)					
4 + n·16	X4	patchInfo	-	-	Status information about the reported patch
bit 0	$U_{:1}$	activated	-	-	1: the patch is active, 0: otherwise
bits 2...1	$U_{:2}$	location	-	-	Indicates where the patch is stored. 0: eFuse, 1: ROM, 2: BBR, 3: file system
8 + n·16	U4	comparatorNumber	-	-	The number of the comparator
12 + n·16	U4	patchAddress	-	-	The address that is targeted by the patch
16 + n·16	U4	patchData	-	-	The data that is inserted at the patchAddress
End of repeated group (nEntries times)					

3.14.9 UBX-MON-PIO (0x0a 0x24)

3.14.9.1 Production testing message for PIO pins

Message	**UBX-MON-PIO** **Production testing message for PIO pins**
Type	Polled
Comment	This message is the response to a poll. It will report the PIO pin state. If the receiver has been set in PIO test mode by a UBX-CFG-PIO message then this state may have been influenced by SET-PIN forms of the UBX-CFG-PIO message.

CONFIDENTIAL

Message structure	Header	Class	ID	Length (Bytes)	Payload	Checksum
	0xb5 0x62	0x0a	0x24	19	*see below*	CK_A CK_B

Payload description:

Byte offset	Type	Name	Scale	Unit	Description
0	U1	`version`	-	-	Message version (0x01 for this version)
1	U1	`responseType`	-	-	• 0: Not in test mode, simple read of pin state • 1: Test mode, simple read of pin state, which may have been affected by a CFG-PIO SET-PIN request
Start of repeated group (17 times)					
2 + n	U1	`pinState`	-	-	One value per PIO pin: • 4: Pin driven high • 5: Pin driven low
End of repeated group (17 times)					

3.14.10 UBX-MON-PT2 (0x0a 0x2b)

3.14.10.1 Multi-GNSS production test monitor

Message	**UBX-MON-PT2** **Multi-GNSS production test monitor**
Type	Periodic/polled
Comment	

Message structure	Header	Class	ID	Length (Bytes)	Payload	Checksum
	0xb5 0x62	0x0a	0x2b	24 + numRfChn·28 + numSvSigDesc·36	*see below*	CK_A CK_B

Payload description:

Byte offset	Type	Name	Scale	Unit	Description
0	U1	`version`	-	-	Message version (0x00 for this version)
1	U1	`testMode`	-	-	currently active test mode
2	U1	`numRfChn`	-	-	number of RF channels reported in this message
3	U1	`numSvSigDesc`	-	-	number of SV signal descriptors reported in this message
4	U4	`testRunTime`	-	ms	test runtime since channel assignment
8	I4	`clkDriftAid`	-	ppb	clock drift of receiver clock relative to extint source (with an offset of 1e9: 1000000000 means 'zero doppler')
12	I4	`clkDriftTrk`	-	ppb	clock drift of receiver clock relative to tracked GNSS signals (without offset: 0 means 'zero doppler')
16	U4	`rtcFreq`	-	Hz	RTC frequency
20	U4	`postStatus`	-	-	Power On Self Test status mask
Start of repeated group (`numRfChn` times)					
24 + n·28	U1	`rfPga`	-	-	RF gain amplifier setting
25 + n·28	U1[27]	`reserved0`	-	-	Reserved
End of repeated group (`numRfChn` times)					
Start of repeated group (`numSvSigDesc` times)					
24 + numRfChn·28 + n·36	U1	`gnssId`	-	-	GNSS identifier (see Satellite Numbering)

CONFIDENTIAL

25 + numRfChn·28 + n·36	U1	`svId`	-	-	GNSS identifier (see Satellite Numbering)
26 + numRfChn·28 + n·36	U1	`sigId`	-	-	Signal identifier. 0 is the only value currently supported.
27 + numRfChn·28 + n·36	U1	`accsId`	-	-	Access identifier, used to indicate frequency channel in range (0-13) for GLONASS (0 = -7, 1 = -6, ..., 12 = +5, 13 = +6). The value should be ignored for all other GNSS.
28 + numRfChn·28 + n·36	U2	`cnoMin`	2^-8	dBHz	minimum CNo across all channels tracking this SV signal
30 + numRfChn·28 + n·36	U2	`cnoMax`	2^-8	dBHz	maximum CNo across all channels tracking this SV signal
32 + numRfChn·28 + n·36	U1[14]	`reserved1`	-	-	Reserved
46 + numRfChn·28 + n·36	U1	`carrPhDevMax`	2^-8	cycles	carrier phase measurement deviation maximum across all associated channels (1 cycle = 360 deg)
47 + numRfChn·28 + n·36	X1	`signalInfo`	-	-	signal information
bit 0	$U_{:1}$	`ifChnIdValid`	-	-	Flag to show if channel input number (ifChnId) is valid
bits 2...1	$U_{:2}$	`ifChnId`	-	-	Channel input number (0,1..numRfChn-1) for this signal corresponding to rfChannels above
48 + numRfChn·28 + n·36	U1	`codeLock Success`	-	%	percentage of channels codelocked
49 + numRfChn·28 + n·36	U1	`phaseLock Success`	-	%	percentage of channels codelocked
50 + numRfChn·28 + n·36	U2	`minCodeLock Time`	-	ms	minimum codelock time across all associated channels
52 + numRfChn·28 + n·36	U2	`maxCodeLock Time`	-	ms	maximum codelock time across all associated channels
54 + numRfChn·28 + n·36	U2	`minPhaseLock Time`	-	ms	minimum phaselock time across all associated channels
56 + numRfChn·28 + n·36	U2	`maxPhaseLock Time`	-	ms	maximum phaselock time across all associated channels
58 + numRfChn·28 + n·36	U1[2]	`reserved2`	-	-	Reserved
End of repeated group (`numSvSigDesc` times)					

3.14.11 UBX-MON-RF (0x0a 0x38)

CONFIDENTIAL

3.14.11.1 RF information

Message	**UBX-MON-RF** **RF information**					
Type	Periodic/polled					
Comment	Information for each RF block.					
Message structure	*Header*	*Class*	*ID*	*Length (Bytes)*	*Payload*	*Checksum*
	0xb5 0x62	0x0a	0x38	4 + nBlocks·24	*see below*	CK_A CK_B

Payload description:

Byte offset	*Type*	*Name*	*Scale*	*Unit*	*Description*
0	U1	`version`	-	-	Message version (0x00 for this version)
1	U1	`nBlocks`	-	-	The number of RF blocks included
2	U1[2]	`reserved0`	-	-	Reserved
Start of repeated group (`nBlocks` times)					
4 + n·24	U1	`blockId`	-	-	RF block ID
5 + n·24	X1	`flags`	-	-	Flags
bits 1...0	U:2	`jammingState`	-	-	output from Jamming/Interference Monitor (0 = unknown or feature disabled, 1 = ok - no significant jamming, 2 = warning - interference visible but fix OK, 3 = critical - interference visible and no fix)
6 + n·24	U1	`antStatus`	-	-	Status of the antenna supervisor state machine (0x00=INIT, 0x01=DONTKNOW, 0x02=OK, 0x03=SHORT, 0x04=OPEN)
7 + n·24	U1	`antPower`	-	-	Current power status of antenna (0x00=OFF, 0x01=ON, 0x02=DONTKNOW)
8 + n·24	U4	`postStatus`	-	-	POST status word
12 + n·24	U1[4]	`reserved1`	-	-	Reserved
16 + n·24	U2	`noisePerMS`	-	-	Noise level as measured by the GPS core
18 + n·24	U2	`agcCnt`	-	-	AGC Monitor (counts SIGHI xor SIGLO, range 0 to 8191)
20 + n·24	U1	`jamInd`	-	-	CW jamming indicator, scaled (0=no CW jamming, 255 = strong CW jamming)
21 + n·24	I1	`ofsI`	-	-	Imbalance of I-part of complex signal, scaled (-128 = max. negative imbalance, 127 = max. positive imbalance)
22 + n·24	U1	`magI`	-	-	Magnitude of I-part of complex signal, scaled (0 = no signal, 255 = max.magnitude)
23 + n·24	I1	`ofsQ`	-	-	Imbalance of Q-part of complex signal, scaled (-128 = max. negative imbalance, 127 = max. positive imbalance)
24 + n·24	U1	`magQ`	-	-	Magnitude of Q-part of complex signal, scaled (0 = no signal, 255 = max.magnitude)
25 + n·24	U1[3]	`reserved2`	-	-	Reserved
End of repeated group (`nBlocks` times)					

3.14.12 UBX-MON-RXBUF (0x0a 0x07)

CONFIDENTIAL

3.14.12.1 Receiver buffer status

Message	**UBX-MON-RXBUF** **Receiver buffer status**					
Type	Periodic/polled					
Comment	**This message is deprecated in this protocol version. Use** UBX-MON-COMMS **instead.**					
Message structure	*Header*	*Class*	*ID*	*Length (Bytes)*	*Payload*	*Checksum*
	0xb5 0x62	0x0a	0x07	24	*see below*	CK_A CK_B

Payload description:

Byte offset	*Type*	*Name*	*Scale*	*Unit*	*Description*
0	U2[6]	`pending`	-	bytes	Number of bytes pending in receiver buffer for each target
12	U1[6]	`usage`	-	%	Maximum usage receiver buffer during the last sysmon period for each target
18	U1[6]	`peakUsage`	-	%	Maximum usage receiver buffer for each target

3.14.13 UBX-MON-RXR (0x0a 0x21)

3.14.13.1 Receiver status information

Message	**UBX-MON-RXR** **Receiver status information**					
Type	Output					
Comment	The receiver ready message is sent when the receiver changes from or to backup mode.					
Message structure	*Header*	*Class*	*ID*	*Length (Bytes)*	*Payload*	*Checksum*
	0xb5 0x62	0x0a	0x21	1	*see below*	CK_A CK_B

Payload description:

Byte offset	*Type*	*Name*	*Scale*	*Unit*	*Description*
0	X1	`flags`	-	-	Receiver status flags
bit 0	$U_{:1}$	`awake`	-	-	not in backup mode

3.14.14 UBX-MON-SPAN (0x0a 0x31)

3.14.14.1 Signal characteristics

Message	**UBX-MON-SPAN** **Signal characteristics**					
Type	Periodic/polled					
Comment	This message is to be used as a basic spectrum analyzer, where it displays one spectrum for each of the receiver's existing RF paths. The spectrum is conveyed with the following parameters: The frequency span in MHz, the frequency bin resolution in MHz, the center frequency in MHz, and 256 bins with amplitude data. Additionally, in order to give further insight on the signal captured by the receiver, the current gain of the internal programmable gain amplifier (PGA) is provided. **This message gives information for comparative analysis rather than absolute and precise spectrum overview. Users should not expect highly accurate spectrum amplitude.** Note that the PGA gain is not included in the spectrum data but is available as a separate field. Neither the spectrum, nor the PGA gain considers the internal fixed LNA gain or an external third-party LNA. The center frequency at each bin, assuming a zero-based bin count, can be computed as *f(i) = center + span * (i - 128) / 256*					
Message structure	*Header*	*Class*	*ID*	*Length (Bytes)*	*Payload*	*Checksum*
	0xb5 0x62	0x0a	0x31	4 + numRfBlocks·272	*see below*	CK_A CK_B

CONFIDENTIAL

Payload description:					
Byte offset	*Type*	*Name*	*Scale*	*Unit*	*Description*
0	U1	`version`	-	-	Message version (0x00 for this version)
1	U1	`numRfBlocks`	-	-	Number of RF blocks included
2	U1[2]	`reserved0`	-	-	Reserved
Start of repeated group (`numRfBlocks` times)					
4 + n·272	U1[256]	`spectrum`	-	dB	Spectrum data (number of points = span/res)
260 + n·272	U4	`span`	-	Hz	Spectrum span
264 + n·272	U4	`res`	-	Hz	Resolution of the spectrum
268 + n·272	U4	`center`	-	Hz	Center of spectrum span
272 + n·272	U1	`pga`	-	dB	Programmable gain amplifier
273 + n·272	U1[3]	`reserved1`	-	-	Reserved
End of repeated group (`numRfBlocks` times)					

3.14.15 UBX-MON-TEMP (0x0a 0x0e)

3.14.15.1 Poll temperature value and state

Message	**UBX-MON-TEMP** **Poll temperature value and state**					
Type	Poll request					
Comment						
Message structure	*Header*	*Class*	*ID*	*Length (Bytes)*	*Payload*	*Checksum*
	0xb5 0x62	0x0a	0x0e	0	*see below*	CK_A CK_B
Payload	This message has no payload.					

3.14.15.2 Temperature value and state

Message	**UBX-MON-TEMP** **Temperature value and state**					
Type	Periodic/polled					
Comment	Reports Temperature value [C] and current temperature related state					
Message structure	*Header*	*Class*	*ID*	*Length (Bytes)*	*Payload*	*Checksum*
	0xb5 0x62	0x0a	0x0e	12	*see below*	CK_A CK_B

Payload description:					
Byte offset	*Type*	*Name*	*Scale*	*Unit*	*Description*
0	U1	`msgVer`	-	-	Message version (0x00 for this version)
1	U1[3]	`reserved0`	-	-	Reserved
4	I2	`tempValue`	-	-	Temperature value [C]
6	U1	`reserved1`	-	-	Reserved
7	U1[5]	`reserved2`	-	-	Reserved

3.14.16 UBX-MON-TXBUF (0x0a 0x08)

CONFIDENTIAL

3.14.16.1 Transmitter buffer status

Message	**UBX-MON-TXBUF** **Transmitter buffer status**					
Type	Periodic/polled					
Comment	**This message is deprecated in this protocol version. Use** UBX-MON-COMMS **instead.**					
Message structure	*Header*	*Class*	*ID*	*Length (Bytes)*	*Payload*	*Checksum*
	0xb5 0x62	0x0a	0x08	28	*see below*	CK_A CK_B

Payload description:

Byte offset	*Type*	*Name*	*Scale*	*Unit*	*Description*
0	U2[6]	`pending`	-	bytes	Number of bytes pending in transmitter buffer for each target
12	U1[6]	`usage`	-	%	Maximum usage transmitter buffer during the last sysmon period for each target
18	U1[6]	`peakUsage`	-	%	Maximum usage transmitter buffer for each target
24	U1	`tUsage`	-	%	Maximum usage of transmitter buffer during the last sysmon period for all targets
25	U1	`tPeakusage`	-	%	Maximum usage of transmitter buffer for all targets
26	X1	`errors`	-	-	Error bitmask
bits 5...0	$U_{:6}$	`limit`	-	-	Buffer limit of corresponding target reached
bit 6	$U_{:1}$	`mem`	-	-	Memory Allocation error
bit 7	$U_{:1}$	`alloc`	-	-	Allocation error (TX buffer full)
27	U1	`reserved0`	-	-	Reserved

3.14.17 UBX-MON-VER (0x0a 0x04)

3.14.17.1 Receiver and software version

Message	**UBX-MON-VER** **Receiver and software version**					
Type	Polled					
Comment						
Message structure	*Header*	*Class*	*ID*	*Length (Bytes)*	*Payload*	*Checksum*
	0xb5 0x62	0x0a	0x04	40 + [0..n]·30	*see below*	CK_A CK_B

Payload description:

Byte offset	*Type*	*Name*	*Scale*	*Unit*	*Description*
0	CH[30]	`swVersion`	-	-	Nul-terminated software version string.
30	CH[10]	`hwVersion`	-	-	Nul-terminated hardware version string
Start of repeated group (N times)					

CONFIDENTIAL

40 + n·30	CH[30]	`extension`	-	-	Extended software information strings. A series of nul-terminated strings. Each extension field is 30 characters long and contains varying software information. Not all extension fields may appear. Examples of reported information: the software version string of the underlying ROM (when the receiver's firmware is running from flash), the firmware version, the supported protocol version, the module identifier, the Flash Information Structure (FIS) file information, the supported major GNSS, the supported augmentation systems. See Firmware and protocol versions for details.
End of repeated group (N times)					

3.15 UBX-NAV (0x01)

The messages in the UBX-NAV class are used to output navigation results and data, such as position, altitude and velocity in a number of formats, and status flags and accuracy estimate figures, or satellite and signal information. The messages are generated with the configured navigation rate.

3.15.1 UBX-NAV-CLOCK (0x01 0x22)

3.15.1.1 Clock solution

Message	**UBX-NAV-CLOCK** **Clock solution**						
Type	Periodic/polled						
Comment							
Message structure	*Header*	*Class*	*ID*	*Length (Bytes)*		*Payload*	*Checksum*
	0xb5 0x62	0x01	0x22	20		*see below*	CK_A CK_B

Payload description:

Byte offset	*Type*	*Name*	*Scale*	*Unit*	*Description*
0	U4	`iTOW`	-	ms	GPS time of week of the navigation epoch. See the section Navigation epochs in Integration manual for details. See the section iTOW timestamps in Integration manual for details.
4	I4	`clkB`	-	ns	Clock bias
8	I4	`clkD`	-	ns/s	Clock drift
12	U4	`tAcc`	-	ns	Time accuracy estimate
16	U4	`fAcc`	-	ps/s	Frequency accuracy estimate

3.15.2 UBX-NAV-COV (0x01 0x36)

3.15.2.1 Covariance matrices

Message	**UBX-NAV-COV** **Covariance matrices**
Type	Periodic/polled

CONFIDENTIAL

Comment	This message outputs the covariance matrices for the position and velocity solutions in the topocentric coordinate system defined as the local-level North (N), East (E), Down (D) frame. As the covariance matrices are symmetric, only the upper triangular part is output.					
Message structure	*Header*	*Class*	*ID*	*Length (Bytes)*	*Payload*	*Checksum*
	0xb5 0x62	0x01	0x36	64	*see below*	CK_A CK_B

Payload description:

Byte offset	*Type*	*Name*	*Scale*	*Unit*	*Description*
0	U4	`iTOW`	-	ms	GPS time of week of the navigation epoch. See the section iTOW timestamps in Integration manual for details.
4	U1	`version`	-	-	Message version (0x00 for this version)
5	U1	`posCovValid`	-	-	Position covariance matrix validity flag
6	U1	`velCovValid`	-	-	Velocity covariance matrix validity flag
7	U1[9]	`reserved0`	-	-	Reserved
16	R4	`posCovNN`	-	m^2	Position covariance matrix value p_NN
20	R4	`posCovNE`	-	m^2	Position covariance matrix value p_NE
24	R4	`posCovND`	-	m^2	Position covariance matrix value p_ND
28	R4	`posCovEE`	-	m^2	Position covariance matrix value p_EE
32	R4	`posCovED`	-	m^2	Position covariance matrix value p_ED
36	R4	`posCovDD`	-	m^2	Position covariance matrix value p_DD
40	R4	`velCovNN`	-	m^2/s^2	Velocity covariance matrix value v_NN
44	R4	`velCovNE`	-	m^2/s^2	Velocity covariance matrix value v_NE
48	R4	`velCovND`	-	m^2/s^2	Velocity covariance matrix value v_ND
52	R4	`velCovEE`	-	m^2/s^2	Velocity covariance matrix value v_EE
56	R4	`velCovED`	-	m^2/s^2	Velocity covariance matrix value v_ED
60	R4	`velCovDD`	-	m^2/s^2	Velocity covariance matrix value v_DD

3.15.3 UBX-NAV-DOP (0x01 0x04)

3.15.3.1 Dilution of precision

Message	**UBX-NAV-DOP** **Dilution of precision**					
Type	Periodic/polled					
Comment	• DOP values are dimensionless. • All DOP values are scaled by a factor of 100. If the unit transmits a value of e.g. 156, the DOP value is 1.56.					
Message structure	*Header*	*Class*	*ID*	*Length (Bytes)*	*Payload*	*Checksum*
	0xb5 0x62	0x01	0x04	18	*see below*	CK_A CK_B

Payload description:

Byte offset	*Type*	*Name*	*Scale*	*Unit*	*Description*
0	U4	`iTOW`	-	ms	GPS time of week of the navigation epoch. See the section iTOW timestamps in Integration manual for details.
4	U2	`gDOP`	0.01	-	Geometric DOP
6	U2	`pDOP`	0.01	-	Position DOP

CONFIDENTIAL

8	U2	tDOP	0.01	-	Time DOP
10	U2	vDOP	0.01	-	Vertical DOP
12	U2	hDOP	0.01	-	Horizontal DOP
14	U2	nDOP	0.01	-	Northing DOP
16	U2	eDOP	0.01	-	Easting DOP

3.15.4 UBX-NAV-EOE (0x01 0x61)

3.15.4.1 End of epoch

Message	**UBX-NAV-EOE** **End of epoch**					
Type	Periodic					
Comment	This message is intended to be used as a marker to collect all navigation messages of an epoch. It is output after all enabled NAV class messages and after all enabled NMEA messages.					
Message structure	*Header*	*Class*	*ID*	*Length (Bytes)*	*Payload*	*Checksum*
	0xb5 0x62	0x01	0x61	4	*see below*	CK_A CK_B

Payload description:

Byte offset	*Type*	*Name*	*Scale*	*Unit*	*Description*
0	U4	iTOW	-	ms	GPS time of week of the navigation epoch. See the section iTOW timestamps in Integration manual for details.

3.15.5 UBX-NAV-GEOFENCE (0x01 0x39)

3.15.5.1 Geofencing status

Message	**UBX-NAV-GEOFENCE** **Geofencing status**					
Type	Periodic/polled					
Comment	This message outputs the evaluated states of all configured geofences for the current epoch's position. See the section Geofencing in Integration manual for feature details.					
Message structure	*Header*	*Class*	*ID*	*Length (Bytes)*	*Payload*	*Checksum*
	0xb5 0x62	0x01	0x39	8 + numFences·2	*see below*	CK_A CK_B

Payload description:

Byte offset	*Type*	*Name*	*Scale*	*Unit*	*Description*
0	U4	iTOW	-	ms	GPS time of week of the navigation epoch. See the section iTOW timestamps in Integration manual for details.
4	U1	version	-	-	Message version (0x00 for this version)
5	U1	status	-	-	Geofencing status • 0 - Geofencing not available or not reliable • 1 - Geofencing active
6	U1	numFences	-	-	Number of geofences
7	U1	combState	-	-	Combined (logical OR) state of all geofences • 0 - Unknown • 1 - Inside • 2 - Outside
Start of repeated group (numFences times)					

CONFIDENTIAL

8 + n·2	U1	`state`	-	-	Geofence state • 0 - Unknown • 1 - Inside • 2 - Outside
9 + n·2	U1	`id`	-	-	Geofence ID (0 = not available)
End of repeated group (`numFences` times)					

3.15.6 UBX-NAV-HPPOSECEF (0x01 0x13)

3.15.6.1 High precision position solution in ECEF

Message	**UBX-NAV-HPPOSECEF** **High precision position solution in ECEF**					
Type	Periodic/polled					
Comment	See important comments concerning validity of position given in section Navigation output filters in Integration manual.					
Message structure	*Header*	*Class*	*ID*	*Length (Bytes)*	*Payload*	*Checksum*
	0xb5 0x62	0x01	0x13	28	*see below*	CK_A CK_B

Payload description:

Byte offset	*Type*	*Name*	*Scale*	*Unit*	*Description*
0	U1	`version`	-	-	Message version (0x00 for this version)
1	U1[3]	`reserved0`	-	-	Reserved
4	U4	`iTOW`	-	ms	GPS time of week of the navigation epoch. See the section iTOW timestamps in Integration manual for details.
8	I4	`ecefX`	-	cm	ECEF X coordinate
12	I4	`ecefY`	-	cm	ECEF Y coordinate
16	I4	`ecefZ`	-	cm	ECEF Z coordinate
20	I1	`ecefXHp`	0.1	mm	High precision component of ECEF X coordinate. Must be in the range of -99..+99. Precise coordinate in cm = ecefX + (ecefXHp * 1e-2).
21	I1	`ecefYHp`	0.1	mm	High precision component of ECEF Y coordinate. Must be in the range of -99..+99. Precise coordinate in cm = ecefY + (ecefYHp * 1e-2).
22	I1	`ecefZHp`	0.1	mm	High precision component of ECEF Z coordinate. Must be in the range of -99..+99. Precise coordinate in cm = ecefZ + (ecefZHp * 1e-2).
23	X1	`flags`	-	-	Additional flags
bit 0	$U_{:1}$	`invalidEcef`	-	-	1 = Invalid ecefX, ecefY, ecefZ, ecefXHp, ecefYHp and ecefZHp
24	U4	`pAcc`	0.1	mm	Position Accuracy Estimate

3.15.7 UBX-NAV-HPPOSLLH (0x01 0x14)

3.15.7.1 High precision geodetic position solution

Message	**UBX-NAV-HPPOSLLH** **High precision geodetic position solution**
Type	Periodic/polled

CONFIDENTIAL

Comment	See important comments concerning validity of position given in section Navigation output filters in Integration manual. This message outputs the Geodetic position in the currently selected ellipsoid. The default is the WGS84 Ellipsoid, but can be changed with the message CFG-NAVSPG-USE_USRDAT.

Message structure	*Header*	*Class*	*ID*	*Length (Bytes)*	*Payload*	*Checksum*
	0xb5 0x62	0x01	0x14	36	*see below*	CK_A CK_B

Payload description:

Byte offset	*Type*	*Name*	*Scale*	*Unit*	*Description*
0	U1	`version`	-	-	Message version (0x00 for this version)
1	U1[2]	`reserved0`	-	-	Reserved
3	X1	`flags`	-	-	Additional flags
bit 0	$U_{:1}$	`invalidLlh`	-	-	1 = Invalid lon, lat, height, hMSL, lonHp, latHp, heightHp and hMSLHp
4	U4	`iTOW`	-	ms	GPS time of week of the navigation epoch. See the section iTOW timestamps in Integration manual for details.
8	I4	`lon`	1e-7	deg	Longitude
12	I4	`lat`	1e-7	deg	Latitude
16	I4	`height`	-	mm	Height above ellipsoid.
20	I4	`hMSL`	-	mm	Height above mean sea level
24	I1	`lonHp`	1e-9	deg	High precision component of longitude. Must be in the range -99..+99. Precise longitude in deg * 1e-7 = lon + (lonHp * 1e-2).
25	I1	`latHp`	1e-9	deg	High precision component of latitude. Must be in the range -99..+99. Precise latitude in deg * 1e-7 = lat + (latHp * 1e-2).
26	I1	`heightHp`	0.1	mm	High precision component of height above ellipsoid. Must be in the range -9..+9. Precise height in mm = height + (heightHp * 0.1).
27	I1	`hMSLHp`	0.1	mm	High precision component of height above mean sea level. Must be in range -9..+9. Precise height in mm = hMSL + (hMSLHp * 0.1)
28	U4	`hAcc`	0.1	mm	Horizontal accuracy estimate
32	U4	`vAcc`	0.1	mm	Vertical accuracy estimate

3.15.8 UBX-NAV-ODO (0x01 0x09)

3.15.8.1 Odometer solution

Message	**UBX-NAV-ODO** **Odometer solution**
Type	Periodic/polled
Comment	This message outputs the traveled distance since last reset (see UBX-NAV-RESETODO) together with an associated estimated accuracy and the total cumulated ground distance (can only be reset by a cold start of the receiver).

Message structure	*Header*	*Class*	*ID*	*Length (Bytes)*	*Payload*	*Checksum*
	0xb5 0x62	0x01	0x09	20	*see below*	CK_A CK_B

Payload description:

Byte offset	*Type*	*Name*	*Scale*	*Unit*	*Description*

CONFIDENTIAL

0	U1	`version`	-	-	Message version (0x00 for this version)
1	U1[3]	`reserved0`	-	-	Reserved
4	U4	`iTOW`	-	ms	GPS time of week of the navigation epoch. See the section iTOW timestamps in Integration manual for details.
8	U4	`distance`	-	m	Ground distance since last reset
12	U4	`totalDistance`	-	m	Total cumulative ground distance
16	U4	`distanceStd`	-	m	Ground distance accuracy (1-sigma)

3.15.9 UBX-NAV-ORB (0x01 0x34)

3.15.9.1 GNSS orbit database info

Message	**UBX-NAV-ORB** **GNSS orbit database info**					
Type	Periodic/polled					
Comment	Status of the GNSS orbit database knowledge.					
Message structure	*Header*	*Class*	*ID*	*Length (Bytes)*	*Payload*	*Checksum*
	0xb5 0x62	0x01	0x34	8 + numSv·6	*see below*	CK_A CK_B

Payload description:

Byte offset	*Type*	*Name*	*Scale*	*Unit*	*Description*
0	U4	`iTOW`	-	ms	GPS time of week of the navigation epoch. See the section iTOW timestamps in Integration manual for details.
4	U1	`version`	-	-	Message version (0x01 for this version)
5	U1	`numSv`	-	-	Number of SVs in the database
6	U1[2]	`reserved0`	-	-	Reserved
Start of repeated group (`numSv` times)					
8 + n·6	U1	`gnssId`	-	-	GNSS ID
9 + n·6	U1	`svId`	-	-	Satellite ID
10 + n·6	X1	`svFlag`	-	-	Information Flags
bits 1...0	$U_{:2}$	`health`	-	-	SV health: • 0 = unknown • 1 = healthy • 2 = not healty
bits 3...2	$U_{:2}$	`visibility`	-	-	SV health: • 0 = unknown • 1 = below horizon • 2 = above horizon • 3 = above elevation mask
11 + n·6	X1	`eph`	-	-	Ephemeris data
bits 4...0	$U_{:5}$	`ephUsability`	-	-	How long the receiver will be able to use the stored ephemeris data from now on: • 31 = The usability period is unknown • 30 = The usability period is more than 450 minutes • 30 > n > 0 = The usability period is between (n-1)*15 and n*15 minutes • 0 = Ephemeris can no longer be used

CONFIDENTIAL

bits 7...5	U:3	ephSource	-	-	• 0 = not available • 1 = GNSS transmission • 2 = external aiding • 3-7 = other
12 + n·6	X1	alm	-	-	Almanac data
bits 4...0	U:5	almUsability	-	-	How long the receiver will be able to use the stored almanac data from now on: • 31 = The usability period is unknown • 30 = The usability period is more than 30 days • 30 > n > 0 = The usability period is between n-1 and n days • 0 = Almanac can no longer be used
bits 7...5	U:3	almSource	-	-	• 0 = not available • 1 = GNSS transmission • 2 = external aiding • 3-7 = other
13 + n·6	X1	otherOrb	-	-	Other orbit data available
bits 4...0	U:5	anoAop Usability	-	-	How long the receiver will be able to use the orbit data from now on: • 31 = The usability period is unknown • 30 = The usability period is more than 30 days • 30 > n > 0 = The usability period is between n-1 and n days • 0 = Data can no longer be used
bits 7...5	U:3	type	-	-	Type of orbit data: • 0 = No orbit data available • 1 = AssistNow Offline data • 2 = AssistNow Autonomous data • 3-7 = Other orbit data
End of repeated group (numSv times)					

3.15.10 UBX-NAV-POSECEF (0x01 0x01)

3.15.10.1 Position solution in ECEF

Message	**UBX-NAV-POSECEF** **Position solution in ECEF**					
Type	Periodic/polled					
Comment	See important comments concerning validity of position given in section Navigation output filters in Integration manual.					
Message structure	*Header*	*Class*	*ID*	*Length (Bytes)*	*Payload*	*Checksum*
	0xb5 0x62	0x01	0x01	20	*see below*	CK_A CK_B

Payload description:

Byte offset	*Type*	*Name*	*Scale*	*Unit*	*Description*
0	U4	iTOW	-	ms	GPS time of week of the navigation epoch. See the section iTOW timestamps in Integration manual for details.
4	I4	ecefX	-	cm	ECEF X coordinate
8	I4	ecefY	-	cm	ECEF Y coordinate
12	I4	ecefZ	-	cm	ECEF Z coordinate

CONFIDENTIAL

16	U4	pAcc	-	cm	Position Accuracy Estimate

3.15.11 UBX-NAV-POSLLH (0x01 0x02)

3.15.11.1 Geodetic position solution

Message	**UBX-NAV-POSLLH** **Geodetic position solution**					
Type	Periodic/polled					
Comment	See important comments concerning validity of position given in section Navigation output filters in Integration manual. This message outputs the Geodetic position in the currently selected ellipsoid. The default is the WGS84 Ellipsoid, but can be changed with the message CFG-NAVSPG-USE_USRDAT.					
Message structure	*Header*	*Class*	*ID*	*Length (Bytes)*	*Payload*	*Checksum*
	0xb5 0x62	0x01	0x02	28	*see below*	CK_A CK_B

Payload description:

Byte offset	*Type*	*Name*	*Scale*	*Unit*	*Description*
0	U4	iTOW	-	ms	GPS time of week of the navigation epoch. See the section iTOW timestamps in Integration manual for details.
4	I4	lon	1e-7	deg	Longitude
8	I4	lat	1e-7	deg	Latitude
12	I4	height	-	mm	Height above ellipsoid
16	I4	hMSL	-	mm	Height above mean sea level
20	U4	hAcc	-	mm	Horizontal accuracy estimate
24	U4	vAcc	-	mm	Vertical accuracy estimate

3.15.12 UBX-NAV-PVT (0x01 0x07)

3.15.12.1 Navigation position velocity time solution

Message	**UBX-NAV-PVT** **Navigation position velocity time solution**					
Type	Periodic/polled					
Comment	This message combines position, velocity and time solution, including accuracy figures. Note that during a leap second there may be more or less than 60 seconds in a minute. See the description of leap seconds in the Integration manual for details.					
Message structure	*Header*	*Class*	*ID*	*Length (Bytes)*	*Payload*	*Checksum*
	0xb5 0x62	0x01	0x07	92	*see below*	CK_A CK_B

Payload description:

Byte offset	*Type*	*Name*	*Scale*	*Unit*	*Description*
0	U4	iTOW	-	ms	GPS time of week of the navigation epoch. See the section iTOW timestamps in Integration manual for details.
4	U2	year	-	y	Year (UTC)
6	U1	month	-	month	Month, range 1..12 (UTC)
7	U1	day	-	d	Day of month, range 1..31 (UTC)
8	U1	hour	-	h	Hour of day, range 0..23 (UTC)

CONFIDENTIAL

9	U1	min	-	min	Minute of hour, range 0..59 (UTC)
10	U1	sec	-	s	Seconds of minute, range 0..60 (UTC)
11	X1	valid	-	-	Validity flags
bit 0	U:1	validDate	-	-	1 = valid UTC Date (see section Time validity in Integration manual for details)
bit 1	U:1	validTime	-	-	1 = valid UTC time of day (see section Time validity in Integration manual for details)
bit 2	U:1	fullyResolved	-	-	1 = UTC time of day has been fully resolved (no seconds uncertainty). Cannot be used to check if time is completely solved.
bit 3	U:1	validMag	-	-	1 = valid magnetic declination
12	U4	tAcc	-	ns	Time accuracy estimate (UTC)
16	I4	nano	-	ns	Fraction of second, range -1e9 .. 1e9 (UTC)
20	U1	fixType	-	-	GNSSfix Type: • 0 = no fix • 1 = dead reckoning only • 2 = 2D-fix • 3 = 3D-fix • 4 = GNSS + dead reckoning combined • 5 = time only fix
21	X1	flags	-	-	Fix status flags
bit 0	U:1	gnssFixOK	-	-	1 = valid fix (i.e within DOP & accuracy masks)
bit 1	U:1	diffSoln	-	-	1 = differential corrections were applied
bits 4...2	U:3	psmState	-	-	Power save mode state (see Power management section in Integration Manual for details. • 0 = PSM is not active • 1 = Enabled (an intermediate state before Acquisition state • 2 = Acquisition • 3 = Tracking • 4 = Power Optimized Tracking • 5 = Inactive
bit 5	U:1	headVehValid	-	-	1 = heading of vehicle is valid, only set if the receiver is in sensor fusion mode
bits 7...6	U:2	carrSoln	-	-	Carrier phase range solution status: • 0 = no carrier phase range solution • 1 = carrier phase range solution with floating ambiguities • 2 = carrier phase range solution with fixed ambiguities (not supported for protocol versions less than 20.00)
22	X1	flags2	-	-	Additional flags
bit 5	U:1	confirmedAvai	-	-	1 = information about UTC Date and Time of Day validity confirmation is available (see section Time validity in Integration manual for details) This flag is only supported in Protocol Versions 19.00, 19.10, 20.10, 20.20, 20.30, 22.00, 23.00, 23.01, 27 and 28.
bit 6	U:1	confirmedDate	-	-	1 = UTC Date validity could be confirmed (see section Time validity in Integration manual for details)

CONFIDENTIAL

bit 7	U:1	confirmedTime	-	-	1 = UTC Time of Day could be confirmed (see section Time validity in Integration manual for details)
23	U1	numSV	-	-	Number of satellites used in Nav Solution
24	I4	lon	1e-7	deg	Longitude
28	I4	lat	1e-7	deg	Latitude
32	I4	height	-	mm	Height above ellipsoid
36	I4	hMSL	-	mm	Height above mean sea level
40	U4	hAcc	-	mm	Horizontal accuracy estimate
44	U4	vAcc	-	mm	Vertical accuracy estimate
48	I4	velN	-	mm/s	NED north velocity
52	I4	velE	-	mm/s	NED east velocity
56	I4	velD	-	mm/s	NED down velocity
60	I4	gSpeed	-	mm/s	Ground Speed (2-D)
64	I4	headMot	1e-5	deg	Heading of motion (2-D)
68	U4	sAcc	-	mm/s	Speed accuracy estimate
72	U4	headAcc	1e-5	deg	Heading accuracy estimate (both motion and vehicle)
76	U2	pDOP	0.01	-	Position DOP
78	X1	flags3	-	-	Additional flags
bit 0	U:1	invalidLlh	-	-	1 = Invalid lon, lat, height and hMSL
79	U1[5]	reserved0	-	-	Reserved
84	I4	headVeh	1e-5	deg	Heading of vehicle (2-D), this is only valid when headVehValid is set, otherwise the output is set to the heading of motion
88	I2	magDec	1e-2	deg	Magnetic declination
90	U2	magAcc	1e-2	deg	Magnetic declination accuracy

3.15.13 UBX-NAV-RESETODO (0x01 0x10)

3.15.13.1 Reset odometer

Message	**UBX-NAV-RESETODO** **Reset odometer**					
Type	Command					
Comment	This message resets the traveled distance computed by the odometer (see UBX-NAV-ODO). UBX-ACK-ACK or UBX-ACK-NAK are returned to indicate success or failure.					
Message structure	*Header*	*Class*	*ID*	*Length (Bytes)*	*Payload*	*Checksum*
	0xb5 0x62	0x01	0x10	0	*see below*	CK_A CK_B
Payload	This message has no payload.					

3.15.14 UBX-NAV-SAT (0x01 0x35)

3.15.14.1 Satellite information

Message	**UBX-NAV-SAT** **Satellite information**
Type	Periodic/polled

CONFIDENTIAL

Comment	This message displays information about SVs that are either known to be visible or currently tracked by the receiver. All signal related information corresponds to the subset of signals specified in Signal Identifiers.					
Message structure	*Header*	*Class*	*ID*	*Length (Bytes)*	*Payload*	*Checksum*
	0xb5 0x62	0x01	0x35	8 + numSvs·12	*see below*	CK_A CK_B

Payload description:

Byte offset	*Type*	*Name*	*Scale*	*Unit*	*Description*
0	U4	`iTOW`	-	ms	GPS time of week of the navigation epoch. See the section iTOW timestamps in Integration manual for details.
4	U1	`version`	-	-	Message version (0x01 for this version)
5	U1	`numSvs`	-	-	Number of satellites
6	U1[2]	`reserved0`	-	-	Reserved
Start of repeated group (`numSvs` times)					
8 + n·12	U1	`gnssId`	-	-	GNSS identifier (see Satellite Numbering) for assignment
9 + n·12	U1	`svId`	-	-	Satellite identifier (see Satellite Numbering) for assignment
10 + n·12	U1	`cno`	-	dBHz	Carrier to noise ratio (signal strength)
11 + n·12	I1	`elev`	-	deg	Elevation (range: +/-90), unknown if out of range
12 + n·12	I2	`azim`	-	deg	Azimuth (range 0-360), unknown if elevation is out of range
14 + n·12	I2	`prRes`	0.1	m	Pseudorange residual
16 + n·12	X4	`flags`	-	-	Bitmask
bits 2...0	$U_{:3}$	`qualityInd`	-	-	Signal quality indicator: • 0 = no signal • 1 = searching signal • 2 = signal acquired • 3 = signal detected but unusable • 4 = code locked and time synchronized • 5, 6, 7 = code and carrier locked and time synchronized
bit 3	$U_{:1}$	`svUsed`	-	-	1 = Signal in the subset specified in Signal Identifiers is currently being used for navigation
bits 5...4	$U_{:2}$	`health`	-	-	Signal health flag: • 0 = unknown • 1 = healthy • 2 = unhealthy
bit 6	$U_{:1}$	`diffCorr`	-	-	1 = differential correction data is available for this SV
bit 7	$U_{:1}$	`smoothed`	-	-	1 = carrier smoothed pseudorange used
bits 10...8	$U_{:3}$	`orbitSource`	-	-	Orbit source: • 0 = no orbit information is available for this SV • 1 = ephemeris is used • 2 = almanac is used • 3 = AssistNow Offline orbit is used • 4 = AssistNow Autonomous orbit is used • 5, 6, 7 = other orbit information is used
bit 11	$U_{:1}$	`ephAvail`	-	-	1 = ephemeris is available for this SV
bit 12	$U_{:1}$	`almAvail`	-	-	1 = almanac is available for this SV
bit 13	$U_{:1}$	`anoAvail`	-	-	1 = AssistNow Offline data is available for this SV

CONFIDENTIAL

bit 14	U:1	aopAvail	-	-	1 = AssistNow Autonomous data is available for this SV
bit 16	U:1	sbasCorrUsed	-	-	1 = SBAS corrections have been used for a signal in the subset specified in Signal Identifiers
bit 17	U:1	rtcmCorrUsed	-	-	1 = RTCM corrections have been used for a signal in the subset specified in Signal Identifiers
bit 18	U:1	slasCorrUsed	-	-	1 = QZSS SLAS corrections have been used for a signal in the subset specified in Signal Identifiers
bit 20	U:1	prCorrUsed	-	-	1 = Pseudorange corrections have been used for a signal in the subset specified in Signal Identifiers
bit 21	U:1	crCorrUsed	-	-	1 = Carrier range corrections have been used for a signal in the subset specified in Signal Identifiers
bit 22	U:1	doCorrUsed	-	-	1 = Range rate (Doppler) corrections have been used for a signal in the subset specified in Signal Identifiers
End of repeated group (`numSvs` times)					

3.15.15 UBX-NAV-SIG (0x01 0x43)

3.15.15.1 Signal information

Message	**UBX-NAV-SIG** **Signal information**					
Type	Periodic/polled					
Comment	This message displays information about signals currently tracked by the receiver.					
Message structure	*Header*	*Class*	*ID*	*Length (Bytes)*	*Payload*	*Checksum*
	0xb5 0x62	0x01	0x43	8 + numSigs·16	*see below*	CK_A CK_B

Payload description:

Byte offset	*Type*	*Name*	*Scale*	*Unit*	*Description*
0	U4	iTOW	-	ms	GPS time of week of the navigation epoch. See the section iTOW timestamps in Integration manual for details.
4	U1	version	-	-	Message version (0x00 for this version)
5	U1	numSigs	-	-	Number of signals
6	U1[2]	reserved0	-	-	Reserved
Start of repeated group (`numSigs` times)					
8 + n·16	U1	gnssId	-	-	GNSS identifier (see Satellite Numbering) for assignment
9 + n·16	U1	svId	-	-	Satellite identifier (see Satellite Numbering) for assignment
10 + n·16	U1	sigId	-	-	New style signal identifier (see Signal Identifiers)
11 + n·16	U1	freqId	-	-	Only used for GLONASS: This is the frequency slot + 7 (range from 0 to 13)
12 + n·16	I2	prRes	0.1	m	Pseudorange residual
14 + n·16	U1	cno	-	dBHz	Carrier-to-noise density ratio (signal strength)

CONFIDENTIAL

15 + n·16	U1	`qualityInd`	-	-	Signal quality indicator: • 0 = no signal • 1 = searching signal • 2 = signal acquired • 3 = signal detected but unusable • 4 = code locked and time synchronized • 5, 6, 7 = code and carrier locked and time synchronized
16 + n·16	U1	`corrSource`	-	-	Correction source: • 0 = no corrections • 1 = SBAS corrections • 2 = BeiDou corrections • 3 = RTCM2 corrections • 4 = RTCM3 OSR corrections • 5 = RTCM3 SSR corrections • 6 = QZSS SLAS corrections
17 + n·16	U1	`ionoModel`	-	-	Ionospheric model used: • 0 = no model • 1 = Klobuchar model transmitted by GPS • 2 = SBAS model • 3 = Klobuchar model transmitted by BeiDou • 8 = Iono delay derived from dual frequency observations
18 + n·16	X2	`sigFlags`	-	-	Signal related flags
bits 1...0	$U_{:2}$	`health`	-	-	Signal health flag: • 0 = unknown • 1 = healthy • 2 = unhealthy
bit 2	$U_{:1}$	`prSmoothed`	-	-	1 = Pseudorange has been smoothed
bit 3	$U_{:1}$	`prUsed`	-	-	1 = Pseudorange has been used for this signal
bit 4	$U_{:1}$	`crUsed`	-	-	1 = Carrier range has been used for this signal
bit 5	$U_{:1}$	`doUsed`	-	-	1 = Range rate (Doppler) has been used for this signal
bit 6	$U_{:1}$	`prCorrUsed`	-	-	1 = Pseudorange corrections have been used for this signal
bit 7	$U_{:1}$	`crCorrUsed`	-	-	1 = Carrier range corrections have been used for this signal
bit 8	$U_{:1}$	`doCorrUsed`	-	-	1 = Range rate (Doppler) corrections have been used for this signal
20 + n·16	U1[4]	`reserved1`	-	-	Reserved
End of repeated group (`numSigs` times)					

3.15.16 UBX-NAV-STATUS (0x01 0x03)

3.15.16.1 Receiver navigation status

Message	**UBX-NAV-STATUS** **Receiver navigation status**					
Type	Periodic/polled					
Comment	See important comments concerning validity of position given in section Navigation output filters in Integration manual.					
Message structure	*Header*	*Class*	*ID*	*Length (Bytes)*	*Payload*	*Checksum*
	0xb5 0x62	0x01	0x03	16	*see below*	CK_A CK_B

CONFIDENTIAL

Payload description:

Byte offset	*Type*	*Name*	*Scale*	*Unit*	*Description*
0	U4	`iTOW`	-	ms	GPS time of week of the navigation epoch. See the section iTOW timestamps in Integration manual for details.
4	U1	`gpsFix`	-	-	GPSfix Type, this value does **not** qualify a fix as valid and within the limits. See note on flag gpsFixOk below. • 0x00 = no fix • 0x01 = dead reckoning only • 0x02 = 2D-fix • 0x03 = 3D-fix • 0x04 = GPS + dead reckoning combined • 0x05 = Time only fix • 0x06..0xff = reserved
5	X1	`flags`	-	-	Navigation Status Flags
bit 0	U:1	`gpsFixOk`	-	-	1 = position and velocity valid and within DOP and ACC Masks.
bit 1	U:1	`diffSoln`	-	-	1 = differential corrections were applied
bit 2	U:1	`wknSet`	-	-	1 = Week Number valid (see section Time validity in Integration manual for details)
bit 3	U:1	`towSet`	-	-	1 = Time of Week valid (see section Time validity in Integration manual for details)
6	X1	`fixStat`	-	-	Fix Status Information
bit 0	U:1	`diffCorr`	-	-	1 = differential corrections available
bit 1	U:1	`carrSolnValid`	-	-	1 = valid carrSoln
bits 7...6	U:2	`mapMatching`	-	-	map matching status: • 00: none • 01: valid but not used, i.e. map matching data was received, but was too old • 10: valid and used, map matching data was applied • 11: valid and used, map matching data was applied. In case of sensor unavailability map matching data enables dead reckoning. This requires map matched latitude/longitude or heading data.
7	X1	`flags2`	-	-	further information about navigation output
bits 1...0	U:2	`psmState`	-	-	power save mode state (not supported for protocol versions less than 13.01) • 0 = ACQUISITION [or when psm disabled] • 1 = TRACKING • 2 = POWER OPTIMIZED TRACKING • 3 = INACTIVE
bits 4...3	U:2	`spoofDetState`	-	-	Spoofing detection state (not supported for protocol versions less than 18.00) • 0: Unknown or deactivated • 1: No spoofing indicated • 2: Spoofing indicated • 3: Multiple spoofing indications Note that the spoofing state value only reflects the dector state for the current navigation epoch. As spoofing can be detected most easily at the transition from real signal to spoofing signal, this is also where the detector is triggered the most. I.e. a value of *1 - No*

CONFIDENTIAL

					spoofing indicated does not mean that the receiver is not spoofed, it simply states that the detector was not triggered in this epoch.
bits 7...6	U:2	carrSoln	-	-	Carrier phase range solution status: • 0 = no carrier phase range solution • 1 = carrier phase range solution with floating ambiguities • 2 = carrier phase range solution with fixed ambiguities
8	U4	ttff	-	ms	Time to first fix (millisecond time tag)
12	U4	msss	-	ms	Milliseconds since Startup / Reset

3.15.17 UBX-NAV-TIMEBDS (0x01 0x24)

3.15.17.1 BeiDou time solution

Message	**UBX-NAV-TIMEBDS** **BeiDou time solution**					
Type	Periodic/polled					
Comment	This message reports the precise BDS time of the most recent navigation solution including validity flags and an accuracy estimate.					
Message structure	*Header*	*Class*	*ID*	*Length (Bytes)*	*Payload*	*Checksum*
	0xb5 0x62	0x01	0x24	20	*see below*	CK_A CK_B

Payload description:

Byte offset	*Type*	*Name*	*Scale*	*Unit*	*Description*
0	U4	iTOW	-	ms	GPS time of week of the navigation epoch. See the section iTOW timestamps in Integration manual for details.
4	U4	SOW	-	s	BDS time of week (rounded to seconds)
8	I4	fSOW	-	ns	Fractional part of SOW (range: +/-500000000). The precise BDS time of week in seconds is: `SOW + fSOW * 1e-9`
12	I2	week	-	-	BDS week number of the navigation epoch
14	I1	leapS	-	s	BDS leap seconds (BDS-UTC)
15	X1	valid	-	-	Validity Flags
bit 0	U:1	sowValid	-	-	1 = Valid SOW and fSOW (see section Time validity in Integration manual for details)
bit 1	U:1	weekValid	-	-	1 = Valid week (see section Time validity in Integration manual for details)
bit 2	U:1	leapSValid	-	-	1 = Valid leap second
16	U4	tAcc	-	ns	Time Accuracy Estimate

3.15.18 UBX-NAV-TIMEGAL (0x01 0x25)

3.15.18.1 Galileo time solution

Message	**UBX-NAV-TIMEGAL** **Galileo time solution**
Type	Periodic/polled

CONFIDENTIAL

Comment	This message reports the precise Galileo time of the most recent navigation solution including validity flags and an accuracy estimate.					
Message structure	*Header*	*Class*	*ID*	*Length (Bytes)*	*Payload*	*Checksum*
	0xb5 0x62	0x01	0x25	20	*see below*	CK_A CK_B

Payload description:

Byte offset	*Type*	*Name*	*Scale*	*Unit*	*Description*
0	U4	`iTOW`	-	ms	GPS time of week of the navigation epoch. See the section iTOW timestamps in Integration manual for details.
4	U4	`galTow`	-	s	Galileo time of week (rounded to seconds)
8	I4	`fGalTow`	-	ns	Fractional part of the Galileo time of week (range: +/-500000000). The precise Galileo time of week in seconds is: `galTow + fGalTow * 1e-9`
12	I2	`galWno`	-	-	Galileo week number
14	I1	`leapS`	-	s	Galileo leap seconds (Galileo-UTC)
15	X1	`valid`	-	-	Validity Flags
bit 0	$U_{:1}$	`galTowValid`	-	-	1 = Valid galTow and fGalTow (see the section Time validity in the Integration manual for details)
bit 1	$U_{:1}$	`galWnoValid`	-	-	1 = Valid galWno (see the section Time validity in the Integration manual for details)
bit 2	$U_{:1}$	`leapSValid`	-	-	1 = Valid leapS
16	U4	`tAcc`	-	ns	Time Accuracy Estimate

3.15.19 UBX-NAV-TIMEGLO (0x01 0x23)

3.15.19.1 GLONASS time solution

Message	**UBX-NAV-TIMEGLO** **GLONASS time solution**					
Type	Periodic/polled					
Comment	This message reports the precise GLO time of the most recent navigation solution including validity flags and an accuracy estimate.					
Message structure	*Header*	*Class*	*ID*	*Length (Bytes)*	*Payload*	*Checksum*
	0xb5 0x62	0x01	0x23	20	*see below*	CK_A CK_B

Payload description:

Byte offset	*Type*	*Name*	*Scale*	*Unit*	*Description*
0	U4	`iTOW`	-	ms	GPS time of week of the navigation epoch. See the section iTOW timestamps in Integration manual for details.
4	U4	`TOD`	-	s	GLONASS time of day (rounded to integer seconds)
8	I4	`fTOD`	-	ns	Fractional part of TOD (range: +/-500000000). The precise GLONASS time of day in seconds is: `TOD + fTOD * 1e-9`
12	U2	`Nt`	-	days	Current date (range: 1-1461), starting at 1 from the 1st Jan of the year indicated by N4 and ending at 1461 at the 31st Dec of the third year after that indicated by N4

CONFIDENTIAL

14		U1	N4	-	-	Four-year interval number starting from 1996 (1=1996, 2=2000, 3=2004...)
15		X1	valid	-	-	Validity flags
	bit 0	U:1	todValid	-	-	1 = Valid TOD and fTOD (see section Time validity in Integration manual for details)
	bit 1	U:1	dateValid	-	-	1 = Valid N4 and Nt (see section Time validity in Integration manual for details)
16		U4	tAcc	-	ns	Time Accuracy Estimate

3.15.20 UBX-NAV-TIMEGPS (0x01 0x20)

3.15.20.1 GPS time solution

Message	**UBX-NAV-TIMEGPS** **GPS time solution**					
Type	Periodic/polled					
Comment	This message reports the precise GPS time of the most recent navigation solution including validity flags and an accuracy estimate.					
Message structure	*Header*	*Class*	*ID*	*Length (Bytes)*	*Payload*	*Checksum*
	0xb5 0x62	0x01	0x20	16	*see below*	CK_A CK_B

Payload description:

Byte offset	*Type*	*Name*	*Scale*	*Unit*	*Description*
0	U4	iTOW	-	ms	GPS time of week of the navigation epoch. See the section iTOW timestamps in Integration manual for details.
4	I4	fTOW	-	ns	Fractional part of iTOW (range: +/-500000). The precise GPS time of week in seconds is: `(iTOW * 1e-3) + (fTOW * 1e-9)`
8	I2	week	-	-	GPS week number of the navigation epoch
10	I1	leapS	-	s	GPS leap seconds (GPS-UTC)
11	X1	valid	-	-	Validity Flags
	bit 0	U:1	towValid	-	-	1 = Valid GPS time of week (iTOW & fTOW, (see section Time validity in Integration manual for details)
	bit 1	U:1	weekValid	-	-	1 = Valid GPS week number (see section Time validity in Integration manual for details)
	bit 2	U:1	leapSValid	-	-	1 = Valid GPS leap seconds
12	U4	tAcc	-	ns	Time Accuracy Estimate

3.15.21 UBX-NAV-TIMELS (0x01 0x26)

3.15.21.1 Leap second event information

Message	**UBX-NAV-TIMELS** **Leap second event information**					
Type	Periodic/polled					
Comment	Information about the upcoming leap second event if one is scheduled.					
Message structure	*Header*	*Class*	*ID*	*Length (Bytes)*	*Payload*	*Checksum*
	0xb5 0x62	0x01	0x26	24	*see below*	CK_A CK_B

Payload description:

CONFIDENTIAL

Byte offset	Type	Name	Scale	Unit	Description
0	U4	iTOW	-	ms	GPS time of week of the navigation epoch. See the section iTOW timestamps in Integration manual for details.
4	U1	version	-	-	Message version (0x00 for this version)
5	U1[3]	reserved0	-	-	Reserved
8	U1	srcOfCurrLs	-	-	Information source for the current number of leap seconds. • 0 = Default (hardcoded in the firmware, can be outdated) • 1 = Derived from time difference between GPS and GLONASS time • 2 = GPS • 3 = SBAS • 4 = BeiDou • 5 = Galileo • 6 = Aided data • 7 = Configured • 255 = Unknown
9	I1	currLs	-	s	Current number of leap seconds since start of GPS time (Jan 6, 1980). It reflects how much GPS time is ahead of UTC time. Galileo number of leap seconds is the same as GPS. BeiDou number of leap seconds is 14 less than GPS. GLONASS follows UTC time, so no leap seconds.
10	U1	srcOfLsChange	-	-	Information source for the future leap second event. • 0 = No source • 2 = GPS • 3 = SBAS • 4 = BeiDou • 5 = Galileo • 6 = GLONASS
11	I1	lsChange	-	s	Future leap second change if one is scheduled. +1 = positive leap second, -1 = negative leap second, 0 = no future leap second event scheduled or no information available.
12	I4	timeToLsEvent	-	s	Number of seconds until the next leap second event, or from the last leap second event if no future event scheduled. If > 0 event is in the future, = 0 event is now, < 0 event is in the past. Valid only if validTimeToLsEvent = 1.
16	U2	dateOfLsGpsWn	-	-	GPS week number (WN) of the next leap second event or the last one if no future event scheduled. Valid only if validTimeToLsEvent = 1.
18	U2	dateOfLsGpsDn	-	-	GPS day of week number (DN) for the next leap second event or the last one if no future event scheduled. Valid only if validTimeToLsEvent = 1. (GPS and Galileo DN: from 1 = Sun to 7 = Sat. BeiDou DN: from 0 = Sun to 6 = Sat.)
20	U1[3]	reserved1	-	-	Reserved
23	X1	valid	-	-	Validity flags
bit 0	$U_{:1}$	validCurrLs	-	-	1 = Valid current number of leap seconds value.

CONFIDENTIAL

bit 1	U:1	validTimeToLsEvent	-	-	1 = Valid time to next leap second event or from the last leap second event if no future event scheduled.

3.15.22 UBX-NAV-TIMEQZSS (0x01 0x27)

3.15.22.1 QZSS time solution

Message	**UBX-NAV-TIMEQZSS** **QZSS time solution**					
Type	Periodic/polled					
Comment	This message reports the precise QZSS time of the most recent navigation solution including validity flags and an accuracy estimate.					
Message structure	*Header*	*Class*	*ID*	*Length (Bytes)*	*Payload*	*Checksum*
	0xb5 0x62	0x01	0x27	20	*see below*	CK_A CK_B

Payload description:

Byte offset	*Type*	*Name*	*Scale*	*Unit*	*Description*
0	U4	iTOW	-	ms	GPS time of week of the navigation epoch. See the description of iTOW for details.
4	U4	qzssTow	-	s	QZSS time of week (rounded to seconds)
8	I4	fQzssTow	-	ns	Fractional part of QZSS time of week (range: +/-500000000). The precise QZSS time of week in seconds is: qzssTow + (fQzssTow * 1e-9)
12	I2	qzssWno	-	-	QZSS week number of the navigation epoch
14	I1	leapS	-	s	QZSS leap seconds (QZSS-UTC)
15	X1	valid	-	-	Validity Flags
bit 0	U:1	qzssTowValid	-	-	1 = Valid QZSS time of week (qzssTow & fQzssTow, see Time Validity section for details)
bit 1	U:1	qzssWnoValid	-	-	1 = Valid QZSS week number (see Time Validity section for details)
bit 2	U:1	leapSValid	-	-	1 = Valid QZSS leap seconds
16	U4	tAcc	-	ns	Time Accuracy Estimate

3.15.23 UBX-NAV-TIMEUTC (0x01 0x21)

3.15.23.1 UTC time solution

Message	**UBX-NAV-TIMEUTC** **UTC time solution**					
Type	Periodic/polled					
Comment	Note that during a leap second there may be more or less than 60 seconds in a minute. See the description of leap seconds in the Integration manual for details.					
Message structure	*Header*	*Class*	*ID*	*Length (Bytes)*	*Payload*	*Checksum*
	0xb5 0x62	0x01	0x21	20	*see below*	CK_A CK_B

Payload description:

Byte offset	*Type*	*Name*	*Scale*	*Unit*	*Description*
0	U4	iTOW	-	ms	GPS time of week of the navigation epoch. See the section iTOW timestamps in Integration manual for details.

CONFIDENTIAL

4	U4	tAcc	-	ns	Time accuracy estimate (UTC)
8	I4	nano	-	ns	Fraction of second, range -1e9 .. 1e9 (UTC)
12	U2	year	-	y	Year, range 1999..2099 (UTC)
14	U1	month	-	month	Month, range 1..12 (UTC)
15	U1	day	-	d	Day of month, range 1..31 (UTC)
16	U1	hour	-	h	Hour of day, range 0..23 (UTC)
17	U1	min	-	min	Minute of hour, range 0..59 (UTC)
18	U1	sec	-	s	Seconds of minute, range 0..60 (UTC)
19	X1	valid	-	-	Validity Flags
bit 0	$U_{:1}$	validTOW	-	-	1 = Valid Time of Week (see section Time validity in Integration manual for details)
bit 1	$U_{:1}$	validWKN	-	-	1 = Valid Week Number (see section Time validity in Integration manual for details)
bit 2	$U_{:1}$	validUTC	-	-	1 = Valid UTC Time
bits 7...4	$U_{:4}$	utcStandard	-	-	UTC standard identifier. (Not supported for protocol versions less than 15.00) • 0 = Information not available • 1 = Communications Research Labratory (CRL), Tokyo, Japan • 2 = National Institute of Standards and Technology (NIST) • 3 = U.S. Naval Observatory (USNO) • 4 = International Bureau of Weights and Measures (BIPM) • 5 = European laboratories • 6 = Former Soviet Union (SU) • 7 = National Time Service Center (NTSC), China • 15 = Unknown

3.15.24 UBX-NAV-VELECEF (0x01 0x11)

3.15.24.1 Velocity solution in ECEF

Message	**UBX-NAV-VELECEF** **Velocity solution in ECEF**					
Type	Periodic/polled					
Comment	See important comments concerning validity of position given in section Navigation output filters in Integration manual.					
Message structure	*Header*	*Class*	*ID*	*Length (Bytes)*	*Payload*	*Checksum*
	0xb5 0x62	0x01	0x11	20	*see below*	CK_A CK_B

Payload description:

Byte offset	*Type*	*Name*	*Scale*	*Unit*	*Description*
0	U4	iTOW	-	ms	GPS time of week of the navigation epoch. See the section iTOW timestamps in Integration manual for details.
4	I4	ecefVX	-	cm/s	ECEF X velocity
8	I4	ecefVY	-	cm/s	ECEF Y velocity
12	I4	ecefVZ	-	cm/s	ECEF Z velocity

CONFIDENTIAL

16	U4	sAcc	-	cm/s	Speed accuracy estimate

3.15.25 UBX-NAV-VELNED (0x01 0x12)

3.15.25.1 Velocity solution in NED frame

Message	**UBX-NAV-VELNED** **Velocity solution in NED frame**					
Type	Periodic/polled					
Comment	See important comments concerning validity of position given in section Navigation output filters in Integration manual.					
Message structure	*Header*	*Class*	*ID*	*Length (Bytes)*	*Payload*	*Checksum*
	0xb5 0x62	0x01	0x12	36	*see below*	CK_A CK_B

Payload description:

Byte offset	*Type*	*Name*	*Scale*	*Unit*	*Description*
0	U4	iTOW	-	ms	GPS time of week of the navigation epoch. See the section iTOW timestamps in Integration manual for details.
4	I4	velN	-	cm/s	North velocity component
8	I4	velE	-	cm/s	East velocity component
12	I4	velD	-	cm/s	Down velocity component
16	U4	speed	-	cm/s	Speed (3-D)
20	U4	gSpeed	-	cm/s	Ground speed (2-D)
24	I4	heading	1e-5	deg	Heading of motion 2-D
28	U4	sAcc	-	cm/s	Speed accuracy Estimate
32	U4	cAcc	1e-5	deg	Course / Heading accuracy estimate

3.16 UBX-RXM (0x02)

The messages in the UBX-RXM class are used to output status and result data from the receiver manager as well as sending commands to the receiver manager.

3.16.1 UBX-RXM-MEASX (0x02 0x14)

3.16.1.1 Satellite measurements for RRLP

Message	**UBX-RXM-MEASX** **Satellite measurements for RRLP**					
Type	Periodic/polled					
Comment	The message payload data is, where possible and appropriate, according to the Radio Resource LCS (Location Services) Protocol (RRLP) [1]. One exception is the satellite and GNSS IDs, which here are given according to the Satellite Numbering scheme. The correct satellites have to be selected and their satellite ID translated accordingly [1, tab. A.10.14] for use in a RRLP Measure Position Response Component. Similarly, the measurement reference time of week has to be forwarded correctly (modulo 14400000 for the 24 LSB GPS measurements variant, modulo 3600000 for the 22 LSB Galileo and Additional Navigation Satelllite Systems (GANSS) measurements variant) of the RRLP measure position response to the SMLC. Reference: [1] ETSI TS 144 031 V11.0.0 (2012-10), Digital cellular telecommunications system (Phase 2+), Location Services (LCS), Mobile Station (MS) - Serving Mobile Location Centre (SMLC), Radio Resource LCS Protocol (RRLP), (3GPP TS 44.031 version 11.0.0 Release 11).					
Message structure	*Header*	*Class*	*ID*	*Length (Bytes)*	*Payload*	*Checksum*
	0xb5 0x62	0x02	0x14	44 + numSV·24	*see below*	CK_A CK_B

CONFIDENTIAL

Payload description:					
Byte offset	*Type*	*Name*	*Scale*	*Unit*	*Description*
0	U1	`version`	-	-	Message version, currently 0x01
1	U1[3]	`reserved0`	-	-	Reserved
4	U4	`gpsTOW`	-	ms	GPS measurement reference time
8	U4	`gloTOW`	-	ms	GLONASS measurement reference time
12	U4	`bdsTOW`	-	ms	BeiDou measurement reference time
16	U1[4]	`reserved1`	-	-	Reserved
20	U4	`qzssTOW`	-	ms	QZSS measurement reference time
24	U2	`gpsTOWacc`	2^-4	ms	GPS measurement reference time accuracy (0xffff = > 4s)
26	U2	`gloTOWacc`	2^-4	ms	GLONASS measurement reference time accuracy (0xffff = > 4s)
28	U2	`bdsTOWacc`	2^-4	ms	BeiDou measurement reference time accuracy (0xffff = > 4s)
30	U1[2]	`reserved2`	-	-	Reserved
32	U2	`qzssTOWacc`	2^-4	ms	QZSS measurement reference time accuracy (0xffff = > 4s)
34	U1	`numSV`	-	-	Number of satellites in repeated block
35	U1	`flags`	-	-	Flags
bits 1...0	$U_{:2}$	`towSet`	-	-	TOW set (0 = no, 1 or 2 = yes)
36	U1[8]	`reserved3`	-	-	Reserved
Start of repeated group (`numSV` times)					
44 + n·24	U1	`gnssId`	-	-	GNSS ID (see Satellite Numbering)
45 + n·24	U1	`svId`	-	-	Satellite ID (see Satellite Numbering)
46 + n·24	U1	`cNo`	-	-	carrier noise ratio (0..63)
47 + n·24	U1	`mpathIndic`	-	-	multipath index (according to [1]) (0 = not measured, 1 = low, 2 = medium, 3 = high)
48 + n·24	I4	`dopplerMS`	0.04	m/s	Doppler measurement
52 + n·24	I4	`dopplerHz`	0.2	Hz	Doppler measurement
56 + n·24	U2	`wholeChips`	-	-	whole value of the code phase measurement (0..1022 for GPS)
58 + n·24	U2	`fracChips`	-	-	fractional value of the code phase measurement (0..1023)
60 + n·24	U4	`codePhase`	2^-21	ms	Code phase
64 + n·24	U1	`intCodePhase`	-	ms	Integer (part of the) code phase
65 + n·24	U1	`pseuRangeRMSErr`	-	-	pseudorange RMS error index (according to [1]) (0..63)
66 + n·24	U1[2]	`reserved4`	-	-	Reserved
End of repeated group (`numSV` times)					

3.16.2 UBX-RXM-PMREQ (0x02 0x41)

CONFIDENTIAL

3.16.2.1 Power management request

Message	**UBX-RXM-PMREQ** **Power management request**					
Type	Command					
Comment	This message requests a power management related task of the receiver.					
Message structure	*Header*	*Class*	*ID*	*Length (Bytes)*	*Payload*	*Checksum*
	0xb5 0x62	0x02	0x41	8	*see below*	CK_A CK_B

Payload description:

Byte offset	*Type*	*Name*	*Scale*	*Unit*	*Description*
0	U4	`duration`	-	ms	Duration of the requested task, set to zero for infinite duration. The maximum supported time is 12 days.
4	X4	`flags`	-	-	task flags
bit 1	$U_{:1}$	`backup`	-	-	The receiver goes into backup mode for a time period defined by duration, provided that it is not connected to USB

3.16.2.2 Power management request

Message	**UBX-RXM-PMREQ** **Power management request**					
Type	Command					
Comment	This message requests a power management related task of the receiver.					
Message structure	*Header*	*Class*	*ID*	*Length (Bytes)*	*Payload*	*Checksum*
	0xb5 0x62	0x02	0x41	16	*see below*	CK_A CK_B

Payload description:

Byte offset	*Type*	*Name*	*Scale*	*Unit*	*Description*
0	U1	`version`	-	-	Message version (0x00 for this version)
1	U1[3]	`reserved0`	-	-	Reserved
4	U4	`duration`	-	ms	Duration of the requested task, set to zero for infinite duration. The maximum supported time is 12 days.
8	X4	`flags`	-	-	task flags
bit 1	$U_{:1}$	`backup`	-	-	The receiver goes into backup mode for a time period defined by duration, provided that it is not connected to USB
bit 2	$U_{:1}$	`force`	-	-	Force receiver backup while USB is connected. USB interface will be disabled.
12	X4	`wakeupSources`	-	-	Configure pins to wake up the receiver. The receiver wakes up if there is either a falling or a rising edge on one of the configured pins.
bit 3	$U_{:1}$	`uartrx`	-	-	Wake up the receiver if there is an edge on the UART RX pin
bit 5	$U_{:1}$	`extint0`	-	-	Wake up the receiver if there is an edge on the EXTINT0 pin
bit 6	$U_{:1}$	`extint1`	-	-	Wake up the receiver if there is an edge on the EXTINT1 pin
bit 7	$U_{:1}$	`spics`	-	-	Wake up the receiver if there is an edge on the SPI CS pin

3.16.3 UBX-RXM-RLM (0x02 0x59)

CONFIDENTIAL

3.16.3.1 Galileo SAR short-RLM report

Message	**UBX-RXM-RLM** **Galileo SAR short-RLM report**					
Type	Output					
Comment	This message contains the contents of any Galileo Search and Rescue (SAR) Short Return Link Message detected by the receiver.					
Message structure	*Header*	*Class*	*ID*	*Length (Bytes)*	*Payload*	*Checksum*
	0xb5 0x62	0x02	0x59	16	*see below*	CK_A CK_B

Payload description:

Byte offset	*Type*	*Name*	*Scale*	*Unit*	*Description*
0	U1	`version`	-	-	Message version (0x00 for this version)
1	U1	`type`	-	-	Message type (0x01 for Short-RLM)
2	U1	`svId`	-	-	Identifier of transmitting satellite (see Satellite Numbering)
3	U1	`reserved0`	-	-	Reserved
4	U1[8]	`beacon`	-	-	Beacon identifier (60 bits), with bytes ordered by earliest transmitted (most significant) first. Top four bits of first byte are zero.
12	U1	`message`	-	-	Message code (4 bits)
13	U1[2]	`params`	-	-	Parameters (16 bits), with bytes ordered by earliest transmitted (most significant) first.
15	U1	`reserved1`	-	-	Reserved

3.16.3.2 Galileo SAR long-RLM report

Message	**UBX-RXM-RLM** **Galileo SAR long-RLM report**					
Type	Output					
Comment	This message contains the contents of any Galileo Search and Rescue (SAR) Long Return Link Message detected by the receiver.					
Message structure	*Header*	*Class*	*ID*	*Length (Bytes)*	*Payload*	*Checksum*
	0xb5 0x62	0x02	0x59	28	*see below*	CK_A CK_B

Payload description:

Byte offset	*Type*	*Name*	*Scale*	*Unit*	*Description*
0	U1	`version`	-	-	Message version (0x00 for this version)
1	U1	`type`	-	-	Message type (0x02 for Long-RLM)
2	U1	`svId`	-	-	Identifier of transmitting satellite (see Satellite Numbering)
3	U1	`reserved0`	-	-	Reserved
4	U1[8]	`beacon`	-	-	Beacon identifier (60 bits), with bytes ordered by earliest transmitted (most significant) first. Top four bits of first byte are zero.
12	U1	`message`	-	-	Message code (4 bits)
13	U1[12]	`params`	-	-	Parameters (96 bits), with bytes ordered by earliest transmitted (most significant) first.
25	U1[3]	`reserved1`	-	-	Reserved

3.16.4 UBX-RXM-RTC5 (0x02 0x23)

CONFIDENTIAL

3.16.4.1 Real time clock status

Message	**UBX-RXM-RTC5** **Real time clock status**					
Type	Periodic/polled					
Comment	Status of the real time clock (RTC).					
Message structure	*Header*	*Class*	*ID*	*Length (Bytes)*	*Payload*	*Checksum*
	0xb5 0x62	0x02	0x23	28	*see below*	CK_A CK_B

Payload description:

Byte offset	*Type*	*Name*	*Scale*	*Unit*	*Description*
0	U4	`rTagHW`	-	-	RTAG high word
4	U4	`rTagLW`	-	-	RTAG low word
8	U4	`freq`	-	Hz	Clock frequency
12	U4	`freqFrac`	2^-32	Hz	Clock frequency fractional part
16	U4	`towFrac`	2^-32	s	Time of week fractional part
20	U4	`tow`	-	s	Time of week
24	U2	`wno`	-	-	GPS week number
26	U1	`towValid`	-	-	TOW is valid flag
27	U1	`freqValid`	-	-	Frequency is valid flag

3.16.5 UBX-RXM-SFRBX (0x02 0x13)

3.16.5.1 Broadcast navigation data subframe

Message	**UBX-RXM-SFRBX** **Broadcast navigation data subframe**					
Type	Output					
Comment	This message reports a complete subframe of broadcast navigation data decoded from a single signal. The number of data words reported in each message depends on the nature of the signal.					
Message structure	*Header*	*Class*	*ID*	*Length (Bytes)*	*Payload*	*Checksum*
	0xb5 0x62	0x02	0x13	8 + numWords·4	*see below*	CK_A CK_B

Payload description:

Byte offset	*Type*	*Name*	*Scale*	*Unit*	*Description*
0	U1	`gnssId`	-	-	GNSS identifier (see Satellite Numbering)
1	U1	`svId`	-	-	Satellite identifier (see Satellite Numbering)
2	U1	`reserved0`	-	-	Reserved
3	U1	`freqId`	-	-	Only used for GLONASS: This is the frequency slot + 7 (range from 0 to 13)
4	U1	`numWords`	-	-	The number of data words contained in this message (up to 10, for currently supported signals)
5	U1	`chn`	-	-	The tracking channel number the message was received on
6	U1	`version`	-	-	Message version, (0x02 for this version)
7	U1	`reserved1`	-	-	Reserved
Start of repeated group (`numWords` times)					
8 + n·4	U4	`dwrd`	-	-	The data words
End of repeated group (`numWords` times)					

CONFIDENTIAL

3.17 UBX-SEC (0x27)

The messages in the UBX-SEC class are used for security features of the receiver.

3.17.1 UBX-SEC-ECSIGN (0x27 0x04)

3.17.1.1 Signature for output message

Message	**UBX-SEC-ECSIGN** **Signature for output message**					
Type	Output					
Comment	The message contains number of messages, their hash, signature for the hash and a session id. The signature is created with ECDSA.					
Message structure	*Header*	*Class*	*ID*	*Length (Bytes)*	*Payload*	*Checksum*
	0xb5 0x62	0x27	0x04	108	*see below*	CK_A CK_B

Payload description:

Byte offset	*Type*	*Name*	*Scale*	*Unit*	*Description*
0	U1	`version`	-	-	Message version (0x01 for this version)
1	U1	`reserved0`	-	-	Reserved
2	U2	`msgNum`	-	-	Number of messages that were hashed and signed
4	U1[32]	`finalHash`	-	-	Hash of the messages
36	U1[24]	`sessionId`	-	-	Session Id
60	U1[48]	`ecdsaSignature`	-	-	Signature computed for the hash and session id

3.17.2 UBX-SEC-UNIQID (0x27 0x03)

3.17.2.1 Unique chip ID

Message	**UBX-SEC-UNIQID** **Unique chip ID**					
Type	Output					
Comment	This message is used to retrieve a unique chip identifier (40 bits, 5 bytes).					
Message structure	*Header*	*Class*	*ID*	*Length (Bytes)*	*Payload*	*Checksum*
	0xb5 0x62	0x27	0x03	9	*see below*	CK_A CK_B

Payload description:

Byte offset	*Type*	*Name*	*Scale*	*Unit*	*Description*
0	U1	`version`	-	-	Message version (0x01 for this version)
1	U1[3]	`reserved0`	-	-	Reserved
4	U1[5]	`uniqueId`	-	-	Unique chip ID

3.17.3 UBX-SEC-SESSID (0x27 0x05)

3.17.3.1 Session ID used for ECSIGN

Message	**UBX-SEC-SESSID** **Session ID used for ECSIGN**
Type	Get/set
Comment	This message gets or sets the session ID used by the receiver to sign transmitted messages using ECSIGN message (Attention: applying changes may take some time and the UBX-SEC-ECSIGN message immediately

CONFIDENTIAL

following a change request may still use the old session ID. Check the session ID provided in the UBX-SEC-ECSIGN message to decide if the new or the old session ID should be used to verify the signature).

Note: Once the session ID has been changed using this message (instead of changing CFG-SEC-ECCFGSESSIONID0, CFG-SEC-ECCFGSESSIONID1 and CFG-SEC-ECCFGSESSIONID2 via UBX-CFG-VALSET) it is no longer possible to use the configuration interface to change the session ID until the next power cycle. Until then, the user is required to issue all subsequent session ID changes using this message. On the next wake-up or power-on, the session ID from the highest priority non-volatile configuration database layer will be restored. Rationale for this implementation is to enable the user to change the session ID when using the configuration lockdown feature but without requirement to mark CFG-SEC as an exempted group. However, the behavior and effects of this message are consistent regardless of the lockdown feature being used or not.

Message structure	*Header*	*Class*	*ID*	*Length (Bytes)*	*Payload*	*Checksum*
	0xb5 0x62	0x27	0x05	28	*see below*	CK_A CK_B

Payload description:

Byte offset	*Type*	*Name*	*Scale*	*Unit*	*Description*
0	U1	`version`	-	-	Message version (0x01 for this version)
1	U1[3]	`reserved0`	-	-	Reserved
4	U1[24]	`sessionId`	-	-	Session Id layout: Byte 0: MSB of ECCFGSESSIONID0 Byte 8: MSB of ECCFGSESSIONID1 Byte 16: MSB of ECCFGSESSIONID2

3.18 UBX-TIM (0x0d)

The messages in the UBX-TIM class are used to output timing information from the receiver, such as time pulse and time mark measurements.

3.18.1 UBX-TIM-TM2 (0x0d 0x03)

3.18.1.1 Time mark data

Message	**UBX-TIM-TM2** **Time mark data**
Type	Periodic/polled
Comment	This message contains information for high precision time stamping / pulse counting. The delay figures and timebase given in CFG-TP Configuration Items are also applied to the time results output in this message.

Message structure	*Header*	*Class*	*ID*	*Length (Bytes)*	*Payload*	*Checksum*
	0xb5 0x62	0x0d	0x03	28	*see below*	CK_A CK_B

Payload description:

Byte offset	*Type*	*Name*	*Scale*	*Unit*	*Description*
0	U1	`ch`	-	-	Channel (i.e. EXTINT) upon which the pulse was measured
1	X1	`flags`	-	-	Bitmask
bit 0	$U_{:1}$	`mode`	-	-	• 0=single • 1=running
bit 1	$U_{:1}$	`run`	-	-	• 0=armed • 1=stopped
bit 2	$U_{:1}$	`newFallingEdge`	-	-	New falling edge detected
bits 4...3	$U_{:2}$	`timeBase`	-	-	• 0=Time base is Receiver time

CONFIDENTIAL

					• 1=Time base is GNSS time (the system according to the configuration in CFG-TP Configuration Items for tpIdx=0) • 2=Time base is UTC (the variant according to the configuration in CFG-NAVSPG-* configuration items)
bit 5	U:1	utc	-	-	• 0=UTC not available • 1=UTC available
bit 6	U:1	time	-	-	• 0=Time is not valid • 1=Time is valid (Valid GNSS fix)
bit 7	U:1	newRisingEdge	-	-	New rising edge detected
2	U2	count	-	-	Rising edge counter
4	U2	wnR	-	-	Week number of last rising edge
6	U2	wnF	-	-	Week number of last falling edge
8	U4	towMsR	-	ms	Tow of rising edge
12	U4	towSubMsR	-	ns	Millisecond fraction of tow of rising edge in nanoseconds
16	U4	towMsF	-	ms	Tow of falling edge
20	U4	towSubMsF	-	ns	Millisecond fraction of tow of falling edge in nanoseconds
24	U4	accEst	-	ns	Accuracy estimate

3.18.2 UBX-TIM-TP (0x0d 0x01)

3.18.2.1 Time pulse time data

Message	**UBX-TIM-TP** **Time pulse time data**					
Type	Periodic/polled					
Comment	This message contains information on the timing of the next pulse at the TIMEPULSE0 output. The recommended configuration when using this message is to set both the measurement rate (CFG-RATE) and the timepulse frequency (CFG-TP) to 1 Hz.					
Message structure	*Header*	*Class*	*ID*	*Length (Bytes)*	*Payload*	*Checksum*
	0xb5 0x62	0x0d	0x01	16	*see below*	CK_A CK_B

Payload description:

Byte offset	*Type*	*Name*	*Scale*	*Unit*	*Description*
0	U4	towMS	-	ms	Time pulse time of week according to time base
4	U4	towSubMS	2^-32	ms	Submillisecond part of towMS
8	I4	qErr	-	ps	Quantization error of time pulse
12	U2	week	-	weeks	Time pulse week number according to time base
14	X1	flags	-	-	Flags
bit 0	U:1	timeBase	-	-	• 0 = Time base is GNSS • 1 = Time base is UTC
bit 1	U:1	utc	-	-	• 0 = UTC not available • 1 = UTC available
bits 3...2	U:2	raim	-	-	(T)RAIM information • 0 = Information not available • 1 = Not active • 2 = Active

CONFIDENTIAL

bit 4	U:1	qErrInvalid	-	-	• 0 = Quantization error valid • 1 = Quantization error invalid
15	X1	refInfo	-	-	Time reference information
bits 3...0	U:4	timeRefGnss	-	-	GNSS reference information. Only valid if time base is GNSS (timeBase=0). • 0 = GPS • 1 = GLONASS • 2 = BeiDou • 3 = Galileo • 15 = Unknown
bits 7...4	U:4	utcStandard	-	-	UTC standard identifier. Only valid if time base is UTC (timeBase=1). • 0 = Information not available • 1 = Communications Research Laboratory (CRL), Tokyo, Japan • 2 = National Institute of Standards and Technology (NIST) • 3 = U.S. Naval Observatory (USNO) • 4 = International Bureau of Weights and Measures (BIPM) • 5 = European laboratories • 6 = Former Soviet Union (SU) • 7 = National Time Service Center (NTSC), China • 15 = Unknown

3.18.3 UBX-TIM-VRFY (0x0d 0x06)

3.18.3.1 Sourced time verification

Message	**UBX-TIM-VRFY** **Sourced time verification**					
Type	Periodic/polled					
Comment	This message contains verification information about previous time received via assistance data or from RTC.					
Message structure	*Header*	*Class*	*ID*	*Length (Bytes)*	*Payload*	*Checksum*
	0xb5 0x62	0x0d	0x06	20	*see below*	CK_A CK_B

Payload description:

Byte offset	*Type*	*Name*	*Scale*	*Unit*	*Description*
0	I4	itow	-	ms	integer millisecond tow received by source
4	I4	frac	-	ns	sub-millisecond part of tow
8	I4	deltaMs	-	ms	integer milliseconds of delta time (current time minus sourced time)
12	I4	deltaNs	-	ns	Sub-millisecond part of delta time
16	U2	wno	-	week	Week number
18	X1	flags	-	-	Flags
bits 2...0	U:3	src	-	-	Aiding time source • 0 = no time aiding done • 2 = source was RTC • 3 = source was assistance data
19	U1	reserved0	-	-	Reserved

CONFIDENTIAL

3.19 UBX-UPD (0x09)

The messages in the UBX-UPD class are used to download a firmware to the receiver and to update the firmware on the flash.

3.19.1 UBX-UPD-CERASE (0x09 0x16)

3.19.1.1 Chip erase the connected SQI flash

Message	**UBX-UPD-CERASE** **Chip erase the connected SQI flash**					
Type	Command					
Comment	An UBX-ACK-ACK message is sent if the command was received and is valid. A UBX-ACK-NAK is sent if the payload has a wrong size. This response indicates the success state of the command parsing, but does not give an indication whether the command was added to the work queue or had to be discarded because of queue size or memory limitation. If the command could not be added to the queue, the receiver will not provide an additional answer to the UBX-ACK-ACK message. If the command was added to the queue and after flash erase operation was performed, the erase success state is signalized with an UBX-UPD-CERASE output message. Note that depending on the flash it can take up to 5 minutes until the UBX-UPD-CERASE message is output.					
Message structure	*Header*	*Class*	*ID*	*Length (Bytes)*	*Payload*	*Checksum*
	0xb5 0x62	0x09	0x16	0	*see below*	CK_A CK_B
Payload	This message has no payload.					

3.19.1.2 Chip erase the connected SQI flash

Message	**UBX-UPD-CERASE** **Chip erase the connected SQI flash**					
Type	Output					
Comment						
Message structure	*Header*	*Class*	*ID*	*Length (Bytes)*	*Payload*	*Checksum*
	0xb5 0x62	0x09	0x16	1	*see below*	CK_A CK_B

Payload description:

Byte offset	*Type*	*Name*	*Scale*	*Unit*	*Description*
0	U1	`success`	-	-	1 if success, 0 if chip erase failed

3.19.2 UBX-UPD-CRC (0x09 0x0d)

3.19.2.1 Check CRC of binary

Message	**UBX-UPD-CRC** **Check CRC of binary**					
Type	Command					
Comment	A UBX-ACK-ACK is sent after after the answer (UBX-UPD-CRC) was sent. A NAK is sent if the payload has a wrong size. ☞ Check of the firmware stored in RAM is performed against CRC checksum received in message					
Message structure	*Header*	*Class*	*ID*	*Length (Bytes)*	*Payload*	*Checksum*
	0xb5 0x62	0x09	0x0d	18	*see below*	CK_A CK_B

Payload description:

Byte offset	*Type*	*Name*	*Scale*	*Unit*	*Description*
0	U1	`version`	-	-	Always 0x01

CONFIDENTIAL

1	U1	`region`	-	-	0 - Calculate CRC over the data stored in any memory mapped region 1 - Calculate CRC over the data stored in flash
2	X4	`addr`	-	-	CRC range begin address (has to be 4 byte aligned)
6	U4	`size`	-	-	CRC range size (has to be a multiple of 4)
10	X4	`crcA`	-	-	First word of CRC checksum
14	X4	`crcB`	-	-	Second word of CRC checksum

3.19.3 UBX-UPD-ERASE (0x09 0x0b)

3.19.3.1 Erase flash sector

Message	**UBX-UPD-ERASE** **Erase flash sector**					
Type	Command					
Comment	A UBX-ACK-ACK message is sent if the command was received and is valid. A UBX-ACK-NAK is sent if the payload has a wrong size. This response indicates the success state of the command parsing, but does not give an indication whether the command was added to the work queue or had to be discarded because of queue size or memory limitation. If the command could not be added to the queue, the receiver will not provide an additional answer to the UBX-ACK-ACK message. If the command was added to the queue and after flash erase operation was performed, the erase success state is signalized with an UBX-UPD-ERASE output message. Note that depending on the flash it can take up to 10 seconds until the UBX-UPD-ERASE message is output.					
Message structure	*Header*	*Class*	*ID*	*Length (Bytes)*	*Payload*	*Checksum*
	0xb5 0x62	0x09	0x0b	4	*see below*	CK_A CK_B

Payload description:

Byte offset	*Type*	*Name*	*Scale*	*Unit*	*Description*
0	U4	`addr`	-	-	Base address of flash sector

3.19.3.2 Erase flash sector

Message	**UBX-UPD-ERASE** **Erase flash sector**					
Type	Output					
Comment						
Message structure	*Header*	*Class*	*ID*	*Length (Bytes)*	*Payload*	*Checksum*
	0xb5 0x62	0x09	0x0b	5	*see below*	CK_A CK_B

Payload description:

Byte offset	*Type*	*Name*	*Scale*	*Unit*	*Description*
0	X4	`addr`	-	-	Base address of flash sector
4	U1	`success`	-	-	1 if success, 0 if erase failed

3.19.4 UBX-UPD-FLDET (0x09 0x08)

3.19.4.1 Get the flash manufacturer and device IDs

Message	**UBX-UPD-FLDET** **Get the flash manufacturer and device IDs**
Type	Poll request
Comment	A UBX-ACK-ACK is sent after the answer (UBX-UPD-FLDET with payload) was sent. A UBX-ACK-NAK is sent if the payload has a wrong size.

CONFIDENTIAL

	Header	Class	ID	Length (Bytes)	Payload	Checksum
Message structure	0xb5 0x62	0x09	0x08	4	*see below*	CK_A CK_B

Payload description:

Byte offset	*Type*	*Name*	*Scale*	*Unit*	*Description*
0	U4	`address`	-	-	Base address of Flash

3.19.4.2 Get the flash manufacturer and device IDs

Message	**UBX-UPD-FLDET** **Get the flash manufacturer and device IDs**					
Type	Get					
Comment	This is the response from the receiver					
	Header	*Class*	*ID*	*Length (Bytes)*	*Payload*	*Checksum*
Message structure	0xb5 0x62	0x09	0x08	8	*see below*	CK_A CK_B

Payload description:

Byte offset	*Type*	*Name*	*Scale*	*Unit*	*Description*
0	U4	`address`	-	-	Base address of Flash
4	U2	`manId`	-	-	Manufacturer ID
6	U2	`devId`	-	-	Device ID

3.19.5 UBX-UPD-FLWRI (0x09 0x0c)

3.19.5.1 Write flash data (area must be erased before)

Message	**UBX-UPD-FLWRI** **Write flash data (area must be erased before)**					
Type	Command					
Comment	An UBX-ACK-ACK message is sent if the command was received and is valid. A UBX-ACK-NAK is sent if the payload has a wrong size or the field 'size' does not match the data payload size. This response indicates the success state of the command parsing, but does not give an indication whether the command was added to the work queue or had to be discarded because of queue size or memory limitation. If the command could not be added to the queue, the receiver will not provide an additional answer to the UBX-ACK-ACK message. If the command was added to the queue and after flash write operation was performed, the write success state is signalized with an UBX-UPD-FLWRI output message.					
	Header	*Class*	*ID*	*Length (Bytes)*	*Payload*	*Checksum*
Message structure	0xb5 0x62	0x09	0x0c	8 + size	*see below*	CK_A CK_B

Payload description:

Byte offset	*Type*	*Name*	*Scale*	*Unit*	*Description*
0	X4	`addr`	-	-	Base address of write block
4	U4	`size`	-	-	Size of data to write
Start of repeated group (`size` times)					
8 + n	U1	`data`	-	-	Data to write
End of repeated group (`size` times)					

3.19.5.2 Write flash data success indication

Message	**UBX-UPD-FLWRI** **Write flash data success indication**
Type	Output
Comment	Success report for write command

CONFIDENTIAL

	Header	Class	ID	Length (Bytes)	Payload	Checksum
Message structure	0xb5 0x62	0x09	0x0c	5	*see below*	CK_A CK_B

Payload description:

Byte offset	Type	Name	Scale	Unit	Description
0	X4	`addr`	-	-	Base address of write block
4	U1	`success`	-	-	1 if success, 0 if write failed

3.19.6 UBX-UPD-IDEN (0x09 0x06)

3.19.6.1 Identify flash loader version

Message	**UBX-UPD-IDEN** **Identify flash loader version**					
Type	Poll request					
Comment	A UBX-ACK-ACK is sent after the answer (UBX-UPD-IDEN including payload) was sent. A UBX-ACK-NAK is sent if the payload has a wrong size.					
	Header	*Class*	*ID*	*Length (Bytes)*	*Payload*	*Checksum*
Message structure	0xb5 0x62	0x09	0x06	0	*see below*	CK_A CK_B
Payload	This message has no payload.					

3.19.6.2 Identify flash loader version

Message	**UBX-UPD-IDEN** **Identify flash loader version**					
Type	Get					
Comment	This is the version response from the receiver.					
	Header	*Class*	*ID*	*Length (Bytes)*	*Payload*	*Checksum*
Message structure	0xb5 0x62	0x09	0x06	1	*see below*	CK_A CK_B

Payload description:

Byte offset	Type	Name	Scale	Unit	Description
0	X1	`Version`	-	-	Major.Minor (each 4 Bit)

3.19.7 UBX-UPD-IMG (0x09 0x1a)

3.19.7.1 Write external image

Message	**UBX-UPD-IMG** **Write external image**					
Type	Command					
Comment	This message is writing external image to receiver CODE-RAM in 512 byte chunks.					
	Header	*Class*	*ID*	*Length (Bytes)*	*Payload*	*Checksum*
Message structure	0xb5 0x62	0x09	0x1a	514	*see below*	CK_A CK_B

Payload description:

Byte offset	Type	Name	Scale	Unit	Description
0	U2	`chunkNum`	-	-	512 byte chunk number counted from 0
2	U1[512]	`data`	-	-	Image data

3.19.8 UBX-UPD-POS (0x09 0x15)

CONFIDENTIAL

3.19.8.1 Enable PLL during safeboot

Message	**UBX-UPD-POS** **Enable PLL during safeboot**					
Type	Command					
Comment	The host can send this message in order to enable precise clock. Clock configuration needs to be loaded beforehand using the UBX-CFG-VALSET message. A UBX-ACK-NAK is sent if the message has wrong size or enabling PLL failed. Host should wait for UBX-ACK-ACK, which is issued after external oscillator and PLL are started It might take a few hundreds of ms before it is completed in case of XTO auto tuning and few dozens of milliseconds in other cases					
Message structure	*Header*	*Class*	*ID*	*Length (Bytes)*	*Payload*	*Checksum*
	0xb5 0x62	0x09	0x15	2	*see below*	CK_A CK_B

Payload description:

Byte offset	*Type*	*Name*	*Scale*	*Unit*	*Description*
0	U1	`version`	-	-	Message version (1 for this message)
1	U1	`skipOsc`	-	-	If true OSC initialization is skipped (It has to be already running!)

3.19.9 UBX-UPD-QSIZE (0x09 0x09)

3.19.9.1 Get number of pending commands in queue

Message	**UBX-UPD-QSIZE** **Get number of pending commands in queue**					
Type	Poll request					
Comment	Get the number of pending commands in command queue. A UBX-ACK-ACK is sent after the answer (UBX-UPD-QSIZE with payload) was sent. The data will be sent via ANSWER if size is not bigger than 255 and with ANWSER1 otherwise. A UBX-ACK-NAK is sent if the payload has a wrong size.					
Message structure	*Header*	*Class*	*ID*	*Length (Bytes)*	*Payload*	*Checksum*
	0xb5 0x62	0x09	0x09	0	*see below*	CK_A CK_B
Payload	This message has no payload.					

3.19.9.2 Number of pending commands in queue

Message	**UBX-UPD-QSIZE** **Number of pending commands in queue**					
Type	Get					
Comment	The number of pending commands in command queue.					
Message structure	*Header*	*Class*	*ID*	*Length (Bytes)*	*Payload*	*Checksum*
	0xb5 0x62	0x09	0x09	2	*see below*	CK_A CK_B

Payload description:

Byte offset	*Type*	*Name*	*Scale*	*Unit*	*Description*
0	U2	`qSize`	-	-	Number of commands pending

3.19.10 UBX-UPD-RBOOT (0x09 0x0e)

3.19.10.1 Perform a watchdog reset

Message	**UBX-UPD-RBOOT** **Perform a watchdog reset**
Type	Command

CONFIDENTIAL

Comment	Performs a watchdog reset after disconnecting USB (if connected). The type of the reset can be compared to a hotstart with an additional operating system reboot. This message is not acknowledged as the system is being reset immediately.					
Message structure	*Header*	*Class*	*ID*	*Length (Bytes)*	*Payload*	*Checksum*
	0xb5 0x62	0x09	0x0e	0	*see below*	CK_A CK_B
Payload	This message has no payload.					

3.19.11 UBX-UPD-ROM (0x09 0x25)

3.19.11.1 ROM CRC

Message	**UBX-UPD-ROM** **ROM CRC**					
Type	Polled					
Comment						
Message structure	*Header*	*Class*	*ID*	*Length (Bytes)*	*Payload*	*Checksum*
	0xb5 0x62	0x09	0x25	12	*see below*	CK_A CK_B

Payload description:

Byte offset	*Type*	*Name*	*Scale*	*Unit*	*Description*
0	U1	`version`	-	-	Version (0x00 for this version)
1	U1[3]	`reserved0`	-	-	Reserved
4	U4	`romCrcLsw`	-	-	Least significant word of ROM CRC (ROM size - 8 bytes)
8	U4	`romCrcMsw`	-	-	Most significant word of ROM CRC (ROM size - 4 bytes)

3.19.12 UBX-UPD-SAFE (0x09 0x07)

3.19.12.1 Boot in safe environment from ROM or RAM

Message	**UBX-UPD-SAFE** **Boot in safe environment from ROM or RAM**					
Type	Command					
Comment	Boot receiver in a safe environment from ROM or RAM. A UBX-ACK-ACK is sent after receiving the command. A UBX-ACK-NAK is sent if the payload has a wrong size.					
Message structure	*Header*	*Class*	*ID*	*Length (Bytes)*	*Payload*	*Checksum*
	0xb5 0x62	0x09	0x07	0	*see below*	CK_A CK_B
Payload	This message has no payload.					

3.19.12.2 Start flash loader task

Message	**UBX-UPD-SAFE** **Start flash loader task**					
Type	Command					
Comment	If already running the firmware from ROM, the Flash loader task has to be started prior to sending update messages (especially flash-write and erase). The receiver does not need to be started in safe environment. A UBX-ACK-ACK is sent after receiving the command. A UBX-ACK-NAK is sent if the payload has a wrong size.					
Message structure	*Header*	*Class*	*ID*	*Length (Bytes)*	*Payload*	*Checksum*
	0xb5 0x62	0x09	0x07	1	*see below*	CK_A CK_B

Payload description:

Byte offset	*Type*	*Name*	*Scale*	*Unit*	*Description*

CONFIDENTIAL

0	X1	flags	-	-	flags
bit 0	U:1	ldrStart	-	-	start flash loader task (flash write and erase routines)

3.19.13 UBX-UPD-SETQ (0x09 0x0f)

3.19.13.1 Set maximum of pending commands in queue

Message	**UBX-UPD-SETQ** **Set maximum of pending commands in queue**					
Type	Set					
Comment	Set the maximum number of pending commands in command queue. A UBX-ACK-ACK is sent after receiving the command. A UBX-ACK-NAK is sent if the payload has wrong size.					
Message structure	*Header*	*Class*	*ID*	*Length (Bytes)*	*Payload*	*Checksum*
	0xb5 0x62	0x09	0x0f	1	*see below*	CK_A CK_B

Payload description:

Byte offset	*Type*	*Name*	*Scale*	*Unit*	*Description*
0	U1	qSize	-	-	Number of commands allowed to be pending

3.19.13.2 Set maximum of pending commands in queue

Message	**UBX-UPD-SETQ** **Set maximum of pending commands in queue**					
Type	Set					
Comment	Set the maximum number of pending commands in command queue. A UBX-ACK-ACK is sent after receiving the command. A UBX-ACK-NAK is sent if the payload has wrong size.					
Message structure	*Header*	*Class*	*ID*	*Length (Bytes)*	*Payload*	*Checksum*
	0xb5 0x62	0x09	0x0f	2	*see below*	CK_A CK_B

Payload description:

Byte offset	*Type*	*Name*	*Scale*	*Unit*	*Description*
0	U2	qSize	-	-	Number of commands allowed to be pending

3.19.14 UBX-UPD-SOS (0x09 0x14)

3.19.14.1 Poll backup restore status

Message	**UBX-UPD-SOS** **Poll backup restore status**					
Type	Poll request					
Comment	Sending this (empty) message to the receiver results in the receiver returning a *System restored from backup* message as defined below.					
Message structure	*Header*	*Class*	*ID*	*Length (Bytes)*	*Payload*	*Checksum*
	0xb5 0x62	0x09	0x14	0	*see below*	CK_A CK_B
Payload	This message has no payload.					

3.19.14.2 Create backup in flash

Message	**UBX-UPD-SOS** **Create backup in flash**
Type	Command
Comment	The host can send this message in order to save part of the battery-backed memory (BBR) in a file in the flash file system. The feature is designed in order to emulate the presence of the backup battery even if it is

CONFIDENTIAL

not present; the host can issue the save on shutdown command before switching off the device supply. It is recommended to issue a GNSS stop command using UBX-CFG-RST before in order to keep the BBR memory content consistent.

	Header	*Class*	*ID*	*Length (Bytes)*	*Payload*	*Checksum*
Message structure	0xb5 0x62	0x09	0x14	4	*see below*	CK_A CK_B

Payload description:

Byte offset	*Type*	*Name*	*Scale*	*Unit*	*Description*
0	U1	`cmd`	-	-	Command (must be 0)
1	U1[3]	`reserved0`	-	-	Reserved

3.19.14.3 Clear backup in flash

Message	**UBX-UPD-SOS** **Clear backup in flash**
Type	Command
Comment	The host can send this message in order to erase the backup file present in flash. It is recommended that the clear operation is issued after the host has received the notification that the memory has been restored after a reset. Alternatively the host can parse the startup string *Restored data saved on shutdown* or poll the UBX-UPD-SOS message for obtaining the status.

	Header	*Class*	*ID*	*Length (Bytes)*	*Payload*	*Checksum*
Message structure	0xb5 0x62	0x09	0x14	4	*see below*	CK_A CK_B

Payload description:

Byte offset	*Type*	*Name*	*Scale*	*Unit*	*Description*
0	U1	`cmd`	-	-	Command (must be 1)
1	U1[3]	`reserved0`	-	-	Reserved

3.19.14.4 Backup creation acknowledge

Message	**UBX-UPD-SOS** **Backup creation acknowledge**
Type	Output
Comment	The message is sent from the device as confirmation of creation of a backup file in flash. The host can safely shut down the device after having received this message.

	Header	*Class*	*ID*	*Length (Bytes)*	*Payload*	*Checksum*
Message structure	0xb5 0x62	0x09	0x14	8	*see below*	CK_A CK_B

Payload description:

Byte offset	*Type*	*Name*	*Scale*	*Unit*	*Description*
0	U1	`cmd`	-	-	Command (must be 2)
1	U1[3]	`reserved0`	-	-	Reserved
4	U1	`response`	-	-	• 0 = Not acknowledged • 1 = Acknowledged
5	U1[3]	`reserved1`	-	-	Reserved

3.19.14.5 System restored from backup

Message	**UBX-UPD-SOS** **System restored from backup**
Type	Output
Comment	The message is sent from the device to notify the host the BBR has been restored from a backup file in the flash file sysetem. The host should clear the backup file after receiving this message. If the UBX-UPD-SOS message is polled, this message will be resent.

CONFIDENTIAL

Message structure	Header	Class	ID	Length (Bytes)	Payload	Checksum
	0xb5 0x62	0x09	0x14	8	*see below*	CK_A CK_B

Payload description:

Byte offset	Type	Name	Scale	Unit	Description
0	U1	`cmd`	-	-	Command (must be 3)
1	U1[3]	`reserved0`	-	-	Reserved
4	U1	`response`	-	-	• 0 = Unknown • 1 = Failed restoring from backup • 2 = Restored from backup • 3 = Not restored (no backup)
5	U1[3]	`reserved1`	-	-	Reserved

CONFIDENTIAL

4 Configuration interface

This chapter describes the receiver configuration interface.

4.1 Configuration database

The configuration database in the receiver's RAM holds the current configuration, which is used by the receiver at run-time. It is constructed on startup of the receiver from several sources of configuration. These sources are called *Configuration Layers*. The current configuration is called the *RAM Layer*. Any configuration in any layer is organized as *Configuration Items*, where each Configuration Item is referenced to by a unique *Configuration Key ID* and holds a single *Configuration Value*.

4.2 Configuration items

The following figure shows the structure of a *Configuration Item*, which consists of a *(Configuration) Key ID* and its *(Configuration) Value*:

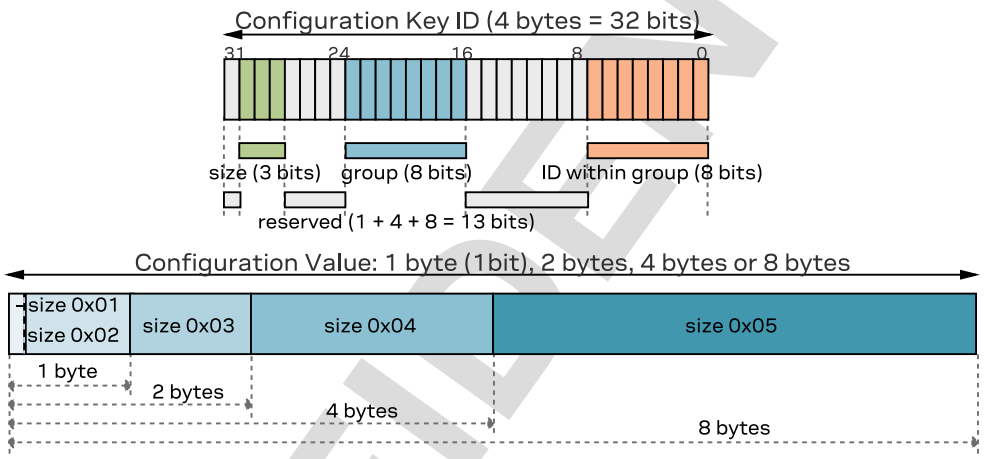

A Configuration Key ID is a 32-bit integer value, which is split into three parts. Note that bits 31, 27…24 and 15…8 are reserved for future use and are currently unused.

- bits 30…28: Three bits that indicate the storage size of a Configuration Value (range 0x01-0x05, see below)
- bits 23…16: Eight bits that define a unique group ID (range 0x01-0xfe)
- bits 7…0: Eight bits that define a unique item ID within a group (range 0x01-0xfe)

The entire 32-bit value is the unique Key ID, which uniquely identifies a particular item. The numeric representation of the Key ID uses the lower-case hexadecimal format, such as `0x20c400a1`. An easier, more readable text representation uses the form CFG-*GROUP-ITEM*. This is also referred to as the *(Configuration) Key Name*.

Supported storage size identifiers (bits 30…28 of the Key ID) are:

- 0x01: one bit (the actual storage used is one byte, but only the least significant bit is used)
- 0x02: one byte
- 0x03: two bytes
- 0x04: four bytes
- 0x05: eight bytes

CONFIDENTIAL

Each Configuration Item is of a certain type, which defines the interpretation of the raw binary data (see also UBX data types):

- U1, U2, U4, U8: unsigned little-endian integers of 8-, 16-, 32- and 64-bit widths
- I1, I2, I4, I8: signed little-endian, two's complement integers of 8-, 16-, 32- and 64-bit widths
- R4, R8: IEEE 754 single (32-bit) and double (64-bit) precision floats
- E1, E2, E4: unsigned little-endian enumeration of 8-, 16-, and 32-bit widths
- X1, X2, X4, X8: unsigned little-endian integers of 8-, 16-, 32- and 64-bit widths for bitfields and other binary data, such as strings
- L: single-bit boolean (true = 1, false = 0), stored as U1

4.3 Configuration layers

Several *Configuration Layers* exist. They are separate sources of Configuration Items. Some of the layers are read-only and others are modifiable. Layers are organized in terms of priority. Values in a high priority layer will replace values stored in low priority layer. On startup of the receiver all configuration layers are read and the items within each layer are stacked up in order to create the *Current Configuration*, which is used by the receiver at run-time.

The following configuration layers are available (in order of priority, highest priority first):

- **RAM**: This layer contains items stored in volatile RAM. This is the Current Configuration. The value of any item can be set by the user at run-time (see UBX protocol interface) and it will become effective immediately.
- **BBR**: This layer contains items stored in the battery-backed RAM. The contents in this layer are preserved as long as a battery backup supply is provided during off periods. The value of any item can be set by the user at run-time (see UBX protocol interface) and it will become effective upon a restart of the receiver.
- **Flash**: This layer contains items stored permanently in the external flash memory. This layer is only available if there is a usable external flash memory. The value of any item can be set by the user at run-time (see UBX protocol interface) and it will become effective upon a restart of the receiver.
- **Default:** This layer contains all items known to the running receiver software and their hard-coded default values. Data in this layer is not writable.

The stacking of the Configuration Items from the different layers (sources) in order to construct the Current Configuration in the RAM Layer is depicted in the following figure. For each defined item, i.e. for each item in the Default Layer, the receiver software goes through the layers above and stacks all the found items on top. Some items may not be present in every layer. The result is the RAM Layer filled with all Configuration Items given Configuration Values coming from the highest priority layer the corresponding item was present. In the example figure below bold text indicates the source of the value in the Current Configuration (the RAM Layer). Empty boxes mean that the layer can hold the item but that it is not currently stored there. Boxes with text mean that an item is currently stored in the layer.

CONFIDENTIAL

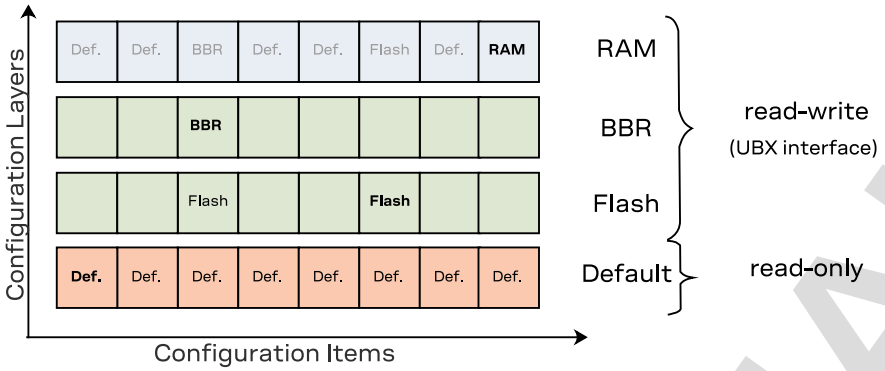

In the example figure above several items (e.g. the first item) are only set in the Default Layer and hence the default value ends up in Current Configuration in the RAM Layer. The third item is present in the Default, Flash and BBR Layers. The value from the BBR Layer has the highest priority and therefore it ends up in the RAM Layer. On the other hand, the default value of the sixth item is changed by the value in the Flash Layer. The value of the last item is changed in the RAM Layer only, i.e. upon startup the value in the RAM Layer was the value from the Default Layer, but the user has changed the value in the RAM Layer at run-time.

4.3.1 Default layer composite

The Default Layer is a composite of the following four layers. Some of these are writable by special means different from the UBX protocol interface used for the read-write layers listed above.

- **Image:** This layer contains items appended to an external flash firmware image. It is not modifiable by the user. It is used to provide firmware images that differ in their default (factory) configuration but not in their software or the items in the ROM layer.
- **OTP:** This layer contains items from the contents of the eFuse OTP (one-time programmable [memory]). See OTP layer configuration for details.
- **Pin:** This layer contains items derived from configuration pins. See Pin layer configuration for details.
- **ROM:** This layer defines all items known to the running receiver software and their hard-coded default value. Data in this layer is not writeable.

The figure below shows all seven layers. An empty space indicates that the item cannot be stored in that layer.

CONFIDENTIAL

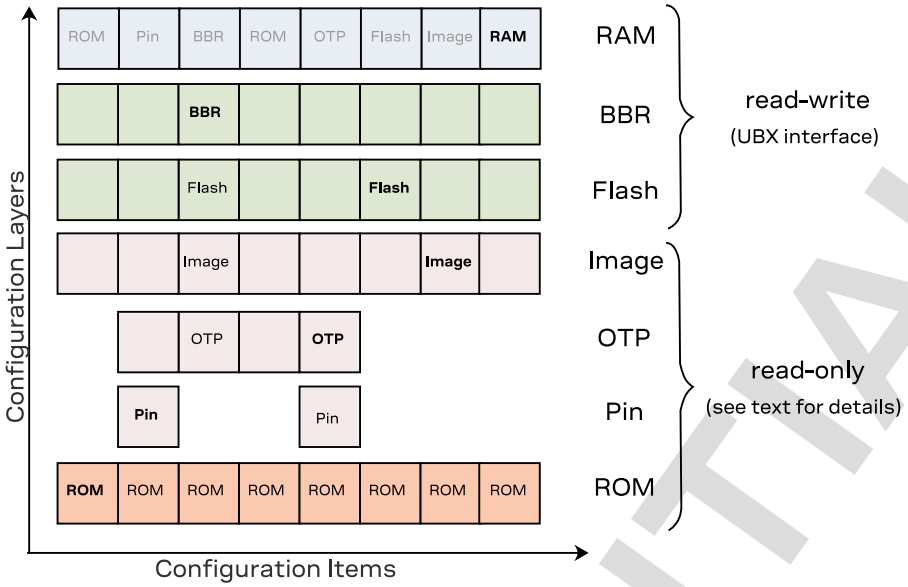

In the example figure above, the first and fourth items are only present in the ROM Layer. Hence the value from the ROM Layer ends up in the RAM Layer. The second item is also present in the Pin Layer and hence that value ends up in the RAM Layer. The third item is present in the ROM, OTP, Image, Flash and BBR Layers. Since the BBR Layer has the highest priority, this value will end up in the RAM Layer. The seventh item is present in the ROM and Image Layers. There is no corresponding item in the Flash or BBR Layers and so the value from the Image Layer ends up in the RAM Layer. The last item is present in the ROM and the RAM Layers. Upon startup the value in the RAM Layer was the value from the ROM Layer. But here the user has changed the value in the RAM Layer at run-time.

4.4 Configuration interface access

The following sections describe the existing interfaces to access the Configuration Database.

4.4.1 UBX protocol interface

The following UBX protocol messages are available to access the Configuration Database:

- UBX-CFG-VALGET to read Configuration Items from the database
- UBX-CFG-VALSET to set Configuration Items in the database
- UBX-CFG-VALDEL to delete Configuration Items from the database

4.4.2 Pin layer configuration

Some Configuration Items are available in the Pin Layer. See the section *Configuration pins* in the Integration manual for or details on how to use configuration pins and how their state affects the values of these items in the Pin Layer.

4.4.3 OTP layer configuration

Some Configuration Items are available in the OTP Layer. They can be set or changed by fusing the eFuse. See the section *OTP layer configuration* in the Integration Manual for details.

CONFIDENTIAL

4.5 Configuration data

Configuration data is the binary representation of a list of Key ID and Value pairs. It is formed by concatenating keys (U4 values) and values (variable type) without any padding. This format is used in the UBX-CFG-VALSET and UBX-CFG-VALGET messages.

The figure below shows an example. The four Items (Key ID - Value pairs) on the left use the four fundamental storage sizes: one byte (L, U1, I1, E1 and X1 types), 2 bytes (U2, I2, E2 and X2 types), four byte (U4, I4, E4, X4 and R4 types) and eight bytes (U8, I8, X8 and R8 types). When concatenated (right) the Key IDs and Values are not aligned and there is no padding.

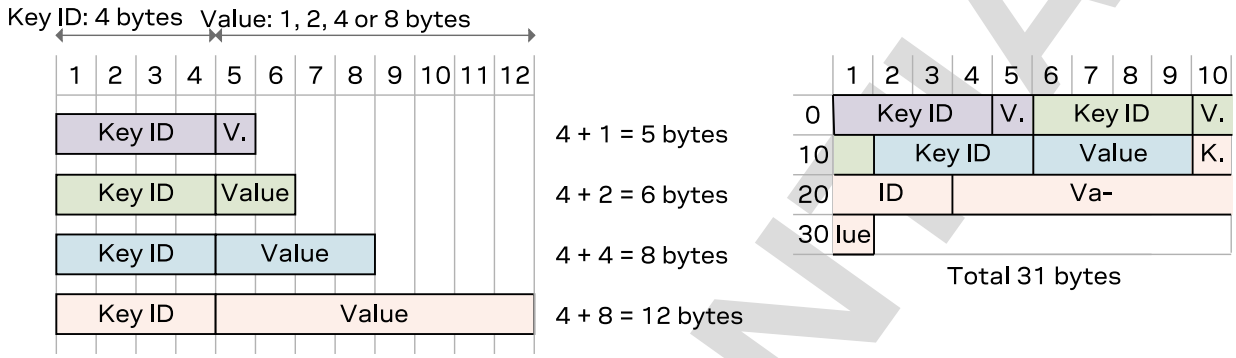

Note that this is an arbitrary example and any number of items of any value storage size can be concatenated the same way.

4.6 Configuration transactions

The configuration interface supports two mechanisms of configuration: the first is a transactionless mechanism where sent configuration changes are applied immediately to the configuration layer(s) requested. The second mechanism is a configuration transaction.

A transaction offers a way of queuing multiple configuration changes. It is particularly useful where different configuration keys depend on each other in such a way that sending one before the other can cause the configuration to be rejected. The queued configuration change requests are stored then checked collectively before being applied to the receiver.

A transaction can have the following states described in the figure below.

CONFIDENTIAL

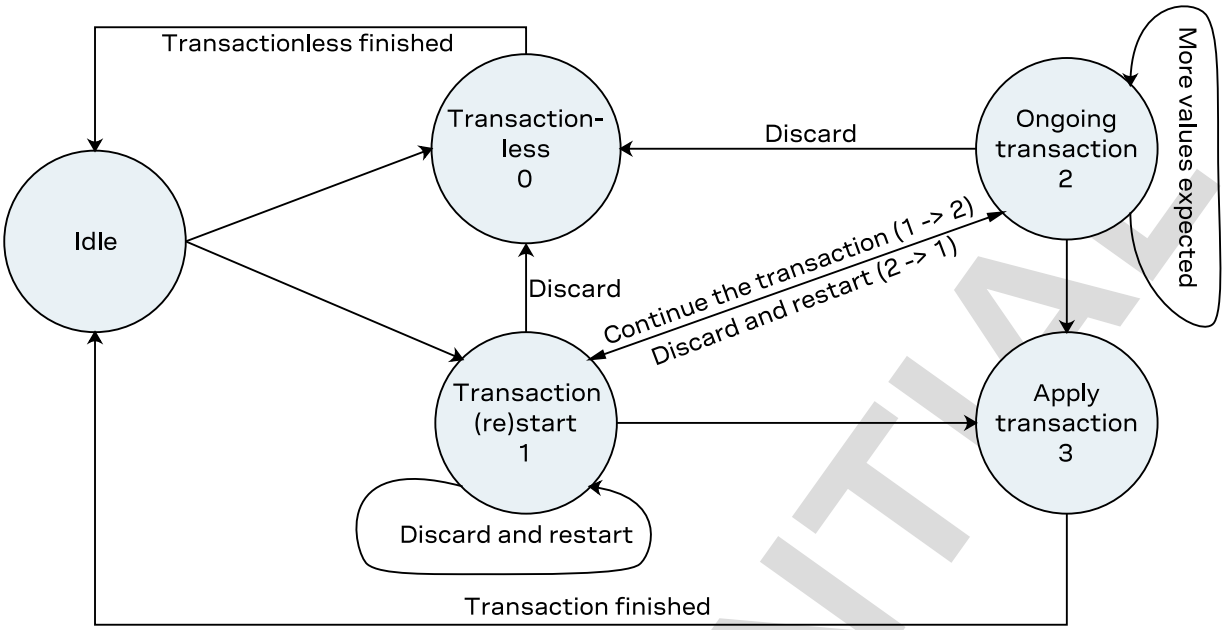

When starting a transaction, the user must specify the layer(s) the changes will be applied to. This list of configuration layer(s) must be observed throughout the transaction states. Modifying the configuration layer(s) mid-transaction will cause the transaction to be aborted and no queued changes will be applied.

In the start transaction state, the receiver will lock the configuration database so that changes from another entity or message cannot be applied. It is possible to send a configuration key-value pairs with the start transaction state. These will be queued waiting to be applied.

In the ongoing state, a configuration key and value must be sent. The receiver will abort the transaction and not apply any changes if this condition is violated. Key-value pairs sent in the ongoing state will be queued waiting to be applied.

In the apply state, the queued changes will be collectively checked and applied to the requested configuration layer(s). Note that any additional key-value pairs sent within the apply state will be ignored.

Note that a transaction can only come from a single source, a UBX-CFG-VALSET message or a UBX-CFG-VALDEL message. This means that in any given transaction it is not possible to mix a delete and a save request. Starting a transaction from a different source will abort the current transaction and no queued changes would be applied.

Refer to UBX-CFG-VALSET and UBX-CFG-VALDEL messages for a detailed description of how to set up a configuration transaction, its limitations and conditions that would cause the transaction to be rejected.

4.7 Configuration reset behavior

The RAM layer is always rebuilt from the layers below when the chip's processor comes out from reset. When using UBX-CFG-RST the processor goes through a reset cycle with these reset types (`resetMode` field):

- `0x00` hardware reset (watchdog) immediately
- `0x01` controlled software reset

CONFIDENTIAL

- `0x04` hardware reset (watchdog) after shutdown

See also the section *Forcing a receiver reset* in the Integration Manual.

4.8 Configuration overview

Group	Description
CFG-ANA	AssistNow Autonomous and Offline configuration
CFG-BATCH	Batched output configuration
CFG-CLOCK	System clock configuration
CFG-GEOFENCE	Geofencing configuration
CFG-HW	Hardware configuration
CFG-I2C	Configuration of the I2C interface
CFG-I2CINPROT	Input protocol configuration of the I2C interface
CFG-I2COUTPROT	Output protocol configuration of the I2C interface
CFG-INFMSG	Information message configuration
CFG-ITFM	Jamming and interference monitor configuration
CFG-LOGFILTER	Data logger configuration
CFG-MOT	Motion detector configuration
CFG-MSGOUT	Message output configuration
CFG-NAVSPG	Standard precision navigation configuration
CFG-NMEA	NMEA protocol configuration
CFG-ODO	Odometer and low-speed course over ground filter configuration
CFG-PM	Configuration for receiver power management
CFG-QZSS	QZSS system configuration
CFG-RATE	Navigation and measurement rate configuration
CFG-RINV	Remote inventory
CFG-SBAS	SBAS configuration
CFG-SEC	Security configuration
CFG-SIGNAL	Satellite systems (GNSS) signal configuration
CFG-SPI	Configuration of the SPI interface
CFG-SPIINPROT	Input protocol configuration of the SPI interface
CFG-SPIOUTPROT	Output protocol configuration of the SPI interface
CFG-TP	Timepulse configuration
CFG-TXREADY	TX ready configuration
CFG-UART1	Configuration of the UART1 interface
CFG-UART1INPROT	Input protocol configuration of the UART1 interface
CFG-UART1OUTPROT	Output protocol configuration of the UART1 interface
CFG-UART2	Configuration of the UART2 interface
CFG-UART2INPROT	Input protocol configuration of the UART2 interface
CFG-UART2OUTPROT	Output protocol configuration of the UART2 interface
CFG-USB	Configuration of the USB interface
CFG-USBINPROT	Input protocol configuration of the USB interface
CFG-USBOUTPROT	Output protocol configuration of the USB interface

CONFIDENTIAL

4.9 Configuration reference

4.9.1 CFG-ANA: AssistNow Autonomous and Offline configuration

Configuration for the AssistNow Autonomous feature.

Configuration item	Key ID	Type	Scale	Unit	Description
CFG-ANA-USE_ANA	`0x10230001`	L	-	-	Use AssistNow Autonomous
CFG-ANA-ORBMAXERR	`0x30230002`	U2	-	m	Maximum acceptable (modeled) orbit error
Range is from 5 to 1000.					

Table 1: CFG-ANA configuration items

4.9.2 CFG-BATCH: Batched output configuration

Use this group to configure the data batching feature which allows position fixes to be stored in the RAM of the receiver to be retrieved later in one batch.

Configuration item	Key ID	Type	Scale	Unit	Description
CFG-BATCH-ENABLE	`0x10260013`	L	-	-	Enable data batching
Enable the feature. Note that it will do nothing unless a positive value is set for CFG-BATCH-MAXENTRIES.					
CFG-BATCH-PIOENABLE	`0x10260014`	L	-	-	Enable PIO notification
Enable PIO notification when the buffer fill level exceeds WARNTHRS.					
CFG-BATCH-MAXENTRIES	`0x30260015`	U2	-	-	Maximum entries in buffer
Size of buffer in number of epochs to store. The firmware will reject this configuration if it exceeds the available memory.					
CFG-BATCH-WARNTHRS	`0x30260016`	U2	-	-	Buffer fill level warning threshold
Buffer fill level that triggers PIO notification, in number of epochs stored.					
CFG-BATCH-PIOACTIVELOW	`0x10260018`	L	-	-	PIO is active low
If this is set the PIO selected with CFG-BATCH-PIOID will be driven low when the buffer fill level reaches WARNTHRS. Otherwise the polarity of the PIO will be the opposite.					
CFG-BATCH-PIOID	`0x20260019`	U1	-	-	PIO ID for buffer level notification
PIO that is used for buffer fill level notification. It must not be assigned to a different function.					
CFG-BATCH-EXTRAPVT	`0x1026001a`	L	-	-	Include extra PVT data
Include additional PVT information in UBX-LOG-BATCH messages. If not selected only basic information is included. The fields `iTOW`, `tAcc`, `numSV`, `hMSL`, `vAcc`, `velN`, `velE`, `velD`, `sAcc`, `headAcc` and `pDOP` in UBX-LOG-BATCH are only valid if this flag is set.					
CFG-BATCH-EXTRAODO	`0x1026001b`	L	-	-	Include odometer data
The fields `distance`, `totalDistance` and `distanceStd` in UBX-LOG-BATCH are only valid if this flag is set.					

Table 2: CFG-BATCH configuration items

4.9.3 CFG-CLOCK: System clock configuration

Configuration of system clock tree.

Configuration item	Key ID	Type	Scale	Unit	Description
CFG-CLOCK-OSC_FREQ	`0x40a4000d`	U4	-	Hz	Oscillator speed

Table 3: CFG-CLOCK configuration items

4.9.4 CFG-GEOFENCE: Geofencing configuration

See the chapter *Geofencing* in Integration Manual for feature details.

CONFIDENTIAL

If the receiver is sent a valid new configuration, it will respond with a UBX-ACK-ACK message and immediately change to the new configuration. Otherwise the receiver will reject the request, by issuing a UBX-ACK-NAK and continuing operation with the previous configuration.

Note that the acknowledge message does not indicate whether the PIO configuration has been successfully applied (pin assigned), it only indicates the successful configuration of the feature. The configured PIO must be previously unoccupied for successful assignment.

Configuration item	Key ID	Type	Scale	Unit	Description
CFG-GEOFENCE-CONFLVL	0x20240011	E1	-	-	Required confidence level for state evaluation
This value times the position's standard deviation (sigma) defines the confidence band. See Table 5 below for a list of possible constants for this item.					
CFG-GEOFENCE-USE_PIO	0x10240012	L	-	-	Use PIO combined fence state output
CFG-GEOFENCE-PINPOL	0x20240013	E1	-	-	PIO pin polarity
See Table 6 below for a list of possible constants for this item.					
CFG-GEOFENCE-PIN	0x20240014	U1	-	-	PIO pin number
CFG-GEOFENCE-USE_FENCE1	0x10240020	L	-	-	Use first geofence
CFG-GEOFENCE-FENCE1_LAT	0x40240021	I4	1e-7	deg	Latitude of the first geofence circle center
CFG-GEOFENCE-FENCE1_LON	0x40240022	I4	1e-7	deg	Longitude of the first geofence circle center
CFG-GEOFENCE-FENCE1_RAD	0x40240023	U4	0.01	m	Radius of the first geofence circle
CFG-GEOFENCE-USE_FENCE2	0x10240030	L	-	-	Use second geofence
CFG-GEOFENCE-FENCE2_LAT	0x40240031	I4	1e-7	deg	Latitude of the second geofence circle center
CFG-GEOFENCE-FENCE2_LON	0x40240032	I4	1e-7	deg	Longitude of the second geofence circle center
CFG-GEOFENCE-FENCE2_RAD	0x40240033	U4	0.01	m	Radius of the second geofence circle
CFG-GEOFENCE-USE_FENCE3	0x10240040	L	-	-	Use third geofence
CFG-GEOFENCE-FENCE3_LAT	0x40240041	I4	1e-7	deg	Latitude of the third geofence circle center
CFG-GEOFENCE-FENCE3_LON	0x40240042	I4	1e-7	deg	Longitude of the third geofence circle center
CFG-GEOFENCE-FENCE3_RAD	0x40240043	U4	0.01	m	Radius of the third geofence circle
CFG-GEOFENCE-USE_FENCE4	0x10240050	L	-	-	Use fourth geofence
CFG-GEOFENCE-FENCE4_LAT	0x40240051	I4	1e-7	deg	Latitude of the fourth geofence circle center
CFG-GEOFENCE-FENCE4_LON	0x40240052	I4	1e-7	deg	Longitude of the fourth geofence circle center
CFG-GEOFENCE-FENCE4_RAD	0x40240053	U4	0.01	m	Radius of the fourth geofence circle

Table 4: CFG-GEOFENCE configuration items

Constant	Value	Description
L000	0	No confidence
L680	1	68%
L950	2	95%
L997	3	99.7%
L9999	4	99.99%
L999999	5	99.9999%

Table 5: Constants for CFG-GEOFENCE-CONFLVL

Constant	Value	Description
LOW_IN	0	PIO low means inside geofence

CONFIDENTIAL

Constant	Value	Description
LOW_OUT	1	PIO low means outside geofence

Table 6: Constants for CFG-GEOFENCE-PINPOL

4.9.5 CFG-HW: Hardware configuration

Hardware configuration settings.

Configuration item	Key ID	Type	Scale	Unit	Description
CFG-HW-DCDC_DIS	0x10a30018	L	-	-	DCDC converter disabled
If set to true, DCDC converter is disabled (default), otherwise DCDC converter is enabled.					
CFG-HW-SINGLE_CLK	0x10a30019	L	-	-	Single clock system
If set to true (default), it indicates RTC clock is present and used. Otherwise main oscillator is used.					
CFG-HW-OSC_TYPE	0x20a30025	E1	-	-	Oscillator type
See Table 8 below for a list of possible constants for this item.					
CFG-HW-CLK_OFFSET	0x40a30028	I4	-	ppb	Clock offset
CFG-HW-CLK_OFFSET_VALID	0x10a30029	L	-	-	Clock offset valid
CFG-HW-CLK_PRECISION	0x40a3002a	U4	-	ppb	Precision of the clock offset
CFG-HW-CLK_MAX_CALIB_DEV	0x40a3002b	U4	-	ppb	Maximum calibration deviation
CFG-HW-CLK_MAX_CALIB_DEV_VALID	0x10a3002c	L	-	-	Max calibration deviation valid
CFG-HW-ANT_CFG_VOLTCTRL	0x10a3002e	L	-	-	Active antenna voltage control flag
Enable active antenna voltage control flag. Used by EXT and MADC engines.					
CFG-HW-ANT_CFG_SHORTDET	0x10a3002f	L	-	-	Short antenna detection flag
Enable short antenna detection flag. Used by EXT and MADC engines.					
CFG-HW-ANT_CFG_SHORTDET_POL	0x10a30030	L	-	-	Short antenna detection polarity
Set to true if polarity of the antenna short detection is active low. Used by EXT engine.					
CFG-HW-ANT_CFG_OPENDET	0x10a30031	L	-	-	Open antenna detection flag
Enable open antenna detection flag. Used by EXT and MADC engines.					
CFG-HW-ANT_CFG_OPENDET_POL	0x10a30032	L	-	-	Open antenna detection polarity
Set to true if polarity of the antenna open detection is active low. Used by EXT engine.					
CFG-HW-ANT_CFG_PWRDOWN	0x10a30033	L	-	-	Power down antenna flag
Enable power down antenna logic in the event of antenna short circuit. CFG-HW-ANT_CFG_SHORTDET must be enabled to use this feature. Used by EXT and MADC engines.					
CFG-HW-ANT_CFG_PWRDOWN_POL	0x10a30034	L	-	-	Power down antenna logic polarity
Set to true if polarity of the antenna power down logic is active high. Used by EXT and MADC engines.					
CFG-HW-ANT_CFG_RECOVER	0x10a30035	L	-	-	Automatic recovery from short state flag
Enable automatic recovery from short state. Used by EXT and MADC engines.					
CFG-HW-ANT_SUP_SWITCH_PIN	0x20a30036	U1	-	-	ANT1 PIO number
Antenna Switch (ANT1) PIO number. Used by EXT and MADC engines.					
CFG-HW-ANT_SUP_SHORT_PIN	0x20a30037	U1	-	-	ANT0 PIO number
Antenna Short (ANT0) PIO number. Used by EXT engine.					
CFG-HW-ANT_SUP_OPEN_PIN	0x20a30038	U1	-	-	ANT2 PIO number
Antenna Switch (ANT2) PIO number. Used by EXT engine.					

Table 7: CFG-HW configuration items

CONFIDENTIAL

Constant	Value	Description
TCXO_D1V2	0x00	TCXO, direct supply 1.2V
TCXO_D1V25	0x01	TCXO, direct supply 1.25V
TCXO_D1V5	0x02	TCXO, direct supply 1.5V
TCXO_D1V8	0x03	TCXO, direct supply 1.8V
TCXO105_D1V2	0x04	TCXO 105'C, direct supply 1.2V
TCXO105_D1V25	0x05	TCXO 105'C, direct supply 1.25V
TCXO105_D1V5	0x06	TCXO 105'C, direct supply 1.5V
TCXO105_D1V8	0x07	TCXO 105'C, direct supply 1.8V

Note that this is only available on u-blox 8 (Dom), which uses a different system for the oscillator configuration. All other values are illegal on Dom.

Table 8: Constants for CFG-HW-OSC_TYPE

4.9.6 CFG-I2C: Configuration of the I2C interface

Settings needed to configure the I2C communication interface.

Configuration item	Key ID	Type	Scale	Unit	Description
CFG-I2C-ADDRESS	0x20510001	U1	-	-	I2C slave address of the receiver (7 bits)
CFG-I2C-EXTENDEDTIMEOUT	0x10510002	L	-	-	Flag to disable timeouting the interface after 1.5 s
CFG-I2C-ENABLED	0x10510003	L	-	-	Flag to indicate if the I2C interface should be enabled

Table 9: CFG-I2C configuration items

4.9.7 CFG-I2CINPROT: Input protocol configuration of the I2C interface

Input protocol enable flags of the I2C interface.

Configuration item	Key ID	Type	Scale	Unit	Description
CFG-I2CINPROT-UBX	0x10710001	L	-	-	Flag to indicate if UBX should be an input protocol on I2C
CFG-I2CINPROT-NMEA	0x10710002	L	-	-	Flag to indicate if NMEA should be an input protocol on I2C
CFG-I2CINPROT-RTCM3X	0x10710004	L	-	-	Flag to indicate if RTCM3X should be an input protocol on I2C

Table 10: CFG-I2CINPROT configuration items

4.9.8 CFG-I2COUTPROT: Output protocol configuration of the I2C interface

Output protocol enable flags of the I2C interface.

Configuration item	Key ID	Type	Scale	Unit	Description
CFG-I2COUTPROT-UBX	0x10720001	L	-	-	Flag to indicate if UBX should be an output protocol on I2C
CFG-I2COUTPROT-NMEA	0x10720002	L	-	-	Flag to indicate if NMEA should be an output protocol on I2C

Table 11: CFG-I2COUTPROT configuration items

4.9.9 CFG-INFMSG: Information message configuration

Information message configuration for the NMEA and UBX protocols.

CONFIDENTIAL

Configuration item	Key ID	Type	Scale	Unit	Description
CFG-INFMSG-UBX_I2C	0x20920001	X1	-	-	Information message enable flags for the UBX protocol on the I2C interface See Table 13 below for a list of possible constants for this item.
CFG-INFMSG-UBX_UART1	0x20920002	X1	-	-	Information message enable flags for the UBX protocol on the UART1 interface See Table 13 below for a list of possible constants for this item.
CFG-INFMSG-UBX_UART2	0x20920003	X1	-	-	Information message enable flags for the UBX protocol on the UART2 interface See Table 13 below for a list of possible constants for this item.
CFG-INFMSG-UBX_USB	0x20920004	X1	-	-	Information message enable flags for the UBX protocol on the USB interface See Table 13 below for a list of possible constants for this item.
CFG-INFMSG-UBX_SPI	0x20920005	X1	-	-	Information message enable flags for the UBX protocol on the SPI interface See Table 13 below for a list of possible constants for this item.
CFG-INFMSG-NMEA_I2C	0x20920006	X1	-	-	Information message enable flags for the NMEA protocol on the I2C interface See Table 13 below for a list of possible constants for this item.
CFG-INFMSG-NMEA_UART1	0x20920007	X1	-	-	Information message enable flags for the NMEA protocol on the UART1 interface See Table 13 below for a list of possible constants for this item.
CFG-INFMSG-NMEA_UART2	0x20920008	X1	-	-	Information message enable flags for the NMEA protocol on the UART2 interface See Table 13 below for a list of possible constants for this item.
CFG-INFMSG-NMEA_USB	0x20920009	X1	-	-	Information message enable flags for the NMEA protocol on the USB interface See Table 13 below for a list of possible constants for this item.
CFG-INFMSG-NMEA_SPI	0x2092000a	X1	-	-	Information message enable flags for the NMEA protocol on the SPI interface See Table 13 below for a list of possible constants for this item.

Table 12: CFG-INFMSG configuration items

Constant	Value	Description
ERROR	0x01	Enable ERROR information messages
WARNING	0x02	Enable WARNING information messages
NOTICE	0x04	Enable NOTICE information messages
TEST	0x08	Enable TEST information messages
DEBUG	0x10	Enable DEBUG information messages

Table 13: Constants for CFG-INFMSG-UBX_I2C, CFG-INFMSG-UBX_UART1, CFG-INFMSG-UBX_UART2, CFG-INFMSG-UBX_USB, CFG-INFMSG-UBX_SPI, CFG-INFMSG-NMEA_I2C, CFG-INFMSG-NMEA_UART1, CFG-INFMSG-NMEA_UART2, CFG-INFMSG-NMEA_USB, CFG-INFMSG-NMEA_SPI

4.9.10 CFG-ITFM: Jamming and interference monitor configuration

Configuration of jamming and interference monitor.

Configuration item	Key ID	Type	Scale	Unit	Description
CFG-ITFM-BBTHRESHOLD	0x20410001	U1	-	-	Broadband jamming detection threshold
CFG-ITFM-CWTHRESHOLD	0x20410002	U1	-	-	CW jamming detection threshold
CFG-ITFM-ENABLE	0x1041000d	L	-	-	Enable interference detection

CONFIDENTIAL

Configuration item	Key ID	Type	Scale	Unit	Description
CFG-ITFM-ANTSETTING	0x20410010	E1	-	-	Antenna setting
See Table 15 below for a list of possible constants for this item.					
CFG-ITFM-ENABLE_AUX	0x10410013	L	-	-	Scan auxiliary bands
Set to true to scan auxiliary bands. Supported on u-blox 8 / u-blox M8 only, otherwise ignored.					

Table 14: CFG-ITFM configuration items

Constant	Value	Description
UNKNOWN	0	Unknown
PASSIVE	1	Passive
ACTIVE	2	Active

Table 15: Constants for CFG-ITFM-ANTSETTING

4.9.11 CFG-LOGFILTER: Data logger configuration

This group can be used to configure the data logger, i.e. to enable/disable the log recording and to get/set the position entry filter settings.

Position entries can be filtered based on time difference, position difference or current speed thresholds. Position and speed filtering also have a minimum time interval. A position is logged if any of the thresholds are exceeded. If a threshold is set to zero it is ignored. The maximum rate of position logging is 1 Hz.

The filter settings will be configured to the provided values only if the APPLY_ALL_FILTERS flag is set. This allows the recording to be enabled/disabled independently of configuring the filter settings.

It is possible to configure the data logger in the absence of a logging file. By doing so, once the logging file is created, the data logger configuration will take effect immediately and logging recording and filtering will activate according to the configuration.

Configuration item	Key ID	Type	Scale	Unit	Description
CFG-LOGFILTER-RECORD_ENA	0x10de0002	L	-	-	Recording enabled
Set to true when recording enabled.					
CFG-LOGFILTER-ONCE_PER_WAKE_UP_ENA	0x10de0003	L	-	-	Once per wake up
Set to true recording only one single position per PSM on/off mode wake-up period is enabled. Note: the value set here does not take effect unless CFG-LOGFILTER-APPLY_ALL_FILTERS is enabled.					
CFG-LOGFILTER-APPLY_ALL_FILTERS	0x10de0004	L	-	-	Apply all filter settings
Set to true when all filter settings are to be applied, not just recording enabling/disabling.					
CFG-LOGFILTER-MIN_INTERVAL	0x30de0005	U2	-	s	Minimum time interval between logged positions
Minimum time interval between logged positions (0 = not set). **This is only applied in combination with the speed and/or position thresholds.** If both MIN_INTERVAL and TIME_THRS are set, MIN_INTERVAL must be less than or equal to TIME_THRS. Note: the value set here does not take effect unless CFG-LOGFILTER-APPLY_ALL_FILTERS is enabled.					
CFG-LOGFILTER-TIME_THRS	0x30de0006	U2	-	s	Time threshold
If the time difference is greater than the threshold then the position is logged (0 = not set). Note: the value set here does not take effect unless CFG-LOGFILTER-APPLY_ALL_FILTERS is enabled.					
CFG-LOGFILTER-SPEED_THRS	0x30de0007	U2	-	m/s	Speed threshold

CONFIDENTIAL

Configuration item	Key ID	Type	Scale	Unit	Description
If the current speed is greater than the threshold then the position is logged (0 = not set). MIN_INTERVAL also applies. Note: value set here does not take effect unless CFG-LOGFILTER-APPLY_ALL_FILTERS is enabled.					
CFG-LOGFILTER-POSITION_THRS	0x40de0008	U4	-	m	Position threshold
If the 3D position difference is greater than the threshold then the position is logged (0 = not set). MIN_INTERVAL also applies. Note: the value set here does not take effect unless CFG-LOGFILTER-APPLY_ALL_FILTERS is enabled.					

Table 16: CFG-LOGFILTER configuration items

4.9.12 CFG-MOT: Motion detector configuration

The items in this group specify the parameters used for the internal receiver motion detector. The platform motion is assessed by combining the detected motion of different detectors looking at specific data types (i.e. GNSS, gyroscopes, accelerometers, wheel ticks). The decision thresholds of the internal detectors can be specified using the configuration items in this group.

Configuration item	Key ID	Type	Scale	Unit	Description
CFG-MOT-GNSSSPEED_THRS	0x20250038	U1	0.01	m/s	GNSS speed threshold below which platform is considered as stationary (a.k.a. static hold threshold)
Set this parameter to 0 for firmware default value or behavior.					
CFG-MOT-GNSSDIST_THRS	0x3025003b	U2	-	-	Distance above which GNSS-based stationary motion is exit (a.k.a. static hold distance threshold)
Set this parameter to 0 for firmware default value or behavior.					

Table 17: CFG-MOT configuration items

4.9.13 CFG-MSGOUT: Message output configuration

For each message and port a separate output rate (per second, per epoch) can be configured.

Configuration item	Key ID	Type	Scale	Unit	Description
CFG-MSGOUT-NMEA_ID_DTM_I2C	0x209100a6	U1	-	-	Output rate of the NMEA-GX-DTM message on port I2C
CFG-MSGOUT-NMEA_ID_DTM_SPI	0x209100aa	U1	-	-	Output rate of the NMEA-GX-DTM message on port SPI
CFG-MSGOUT-NMEA_ID_DTM_UART1	0x209100a7	U1	-	-	Output rate of the NMEA-GX-DTM message on port UART1
CFG-MSGOUT-NMEA_ID_DTM_UART2	0x209100a8	U1	-	-	Output rate of the NMEA-GX-DTM message on port UART2
CFG-MSGOUT-NMEA_ID_DTM_USB	0x209100a9	U1	-	-	Output rate of the NMEA-GX-DTM message on port USB
CFG-MSGOUT-NMEA_ID_GBS_I2C	0x209100dd	U1	-	-	Output rate of the NMEA-GX-GBS message on port I2C
CFG-MSGOUT-NMEA_ID_GBS_SPI	0x209100e1	U1	-	-	Output rate of the NMEA-GX-GBS message on port SPI
CFG-MSGOUT-NMEA_ID_GBS_UART1	0x209100de	U1	-	-	Output rate of the NMEA-GX-GBS message on port UART1
CFG-MSGOUT-NMEA_ID_GBS_UART2	0x209100df	U1	-	-	Output rate of the NMEA-GX-GBS message on port UART2
CFG-MSGOUT-NMEA_ID_GBS_USB	0x209100e0	U1	-	-	Output rate of the NMEA-GX-GBS message on port USB
CFG-MSGOUT-NMEA_ID_GGA_I2C	0x209100ba	U1	-	-	Output rate of the NMEA-GX-GGA message on port I2C

CONFIDENTIAL

Configuration item	Key ID	Type	Scale	Unit	Description
CFG-MSGOUT-NMEA_ID_GGA_SPI	0x209100be	U1	-	-	Output rate of the NMEA-GX-GGA message on port SPI
CFG-MSGOUT-NMEA_ID_GGA_UART1	0x209100bb	U1	-	-	Output rate of the NMEA-GX-GGA message on port UART1
CFG-MSGOUT-NMEA_ID_GGA_UART2	0x209100bc	U1	-	-	Output rate of the NMEA-GX-GGA message on port UART2
CFG-MSGOUT-NMEA_ID_GGA_USB	0x209100bd	U1	-	-	Output rate of the NMEA-GX-GGA message on port USB
CFG-MSGOUT-NMEA_ID_GLL_I2C	0x209100c9	U1	-	-	Output rate of the NMEA-GX-GLL message on port I2C
CFG-MSGOUT-NMEA_ID_GLL_SPI	0x209100cd	U1	-	-	Output rate of the NMEA-GX-GLL message on port SPI
CFG-MSGOUT-NMEA_ID_GLL_UART1	0x209100ca	U1	-	-	Output rate of the NMEA-GX-GLL message on port UART1
CFG-MSGOUT-NMEA_ID_GLL_UART2	0x209100cb	U1	-	-	Output rate of the NMEA-GX-GLL message on port UART2
CFG-MSGOUT-NMEA_ID_GLL_USB	0x209100cc	U1	-	-	Output rate of the NMEA-GX-GLL message on port USB
CFG-MSGOUT-NMEA_ID_GNS_I2C	0x209100b5	U1	-	-	Output rate of the NMEA-GX-GNS message on port I2C
CFG-MSGOUT-NMEA_ID_GNS_SPI	0x209100b9	U1	-	-	Output rate of the NMEA-GX-GNS message on port SPI
CFG-MSGOUT-NMEA_ID_GNS_UART1	0x209100b6	U1	-	-	Output rate of the NMEA-GX-GNS message on port UART1
CFG-MSGOUT-NMEA_ID_GNS_UART2	0x209100b7	U1	-	-	Output rate of the NMEA-GX-GNS message on port UART2
CFG-MSGOUT-NMEA_ID_GNS_USB	0x209100b8	U1	-	-	Output rate of the NMEA-GX-GNS message on port USB
CFG-MSGOUT-NMEA_ID_GRS_I2C	0x209100ce	U1	-	-	Output rate of the NMEA-GX-GRS message on port I2C
CFG-MSGOUT-NMEA_ID_GRS_SPI	0x209100d2	U1	-	-	Output rate of the NMEA-GX-GRS message on port SPI
CFG-MSGOUT-NMEA_ID_GRS_UART1	0x209100cf	U1	-	-	Output rate of the NMEA-GX-GRS message on port UART1
CFG-MSGOUT-NMEA_ID_GRS_UART2	0x209100d0	U1	-	-	Output rate of the NMEA-GX-GRS message on port UART2
CFG-MSGOUT-NMEA_ID_GRS_USB	0x209100d1	U1	-	-	Output rate of the NMEA-GX-GRS message on port USB
CFG-MSGOUT-NMEA_ID_GSA_I2C	0x209100bf	U1	-	-	Output rate of the NMEA-GX-GSA message on port I2C
CFG-MSGOUT-NMEA_ID_GSA_SPI	0x209100c3	U1	-	-	Output rate of the NMEA-GX-GSA message on port SPI
CFG-MSGOUT-NMEA_ID_GSA_UART1	0x209100c0	U1	-	-	Output rate of the NMEA-GX-GSA message on port UART1
CFG-MSGOUT-NMEA_ID_GSA_UART2	0x209100c1	U1	-	-	Output rate of the NMEA-GX-GSA message on port UART2
CFG-MSGOUT-NMEA_ID_GSA_USB	0x209100c2	U1	-	-	Output rate of the NMEA-GX-GSA message on port USB
CFG-MSGOUT-NMEA_ID_GST_I2C	0x209100d3	U1	-	-	Output rate of the NMEA-GX-GST message on port I2C
CFG-MSGOUT-NMEA_ID_GST_SPI	0x209100d7	U1	-	-	Output rate of the NMEA-GX-GST message on port SPI

CONFIDENTIAL

Configuration item	Key ID	Type	Scale	Unit	Description
CFG-MSGOUT-NMEA_ID_GST_UART1	0x209100d4	U1	-	-	Output rate of the NMEA-GX-GST message on port UART1
CFG-MSGOUT-NMEA_ID_GST_UART2	0x209100d5	U1	-	-	Output rate of the NMEA-GX-GST message on port UART2
CFG-MSGOUT-NMEA_ID_GST_USB	0x209100d6	U1	-	-	Output rate of the NMEA-GX-GST message on port USB
CFG-MSGOUT-NMEA_ID_GSV_I2C	0x209100c4	U1	-	-	Output rate of the NMEA-GX-GSV message on port I2C
CFG-MSGOUT-NMEA_ID_GSV_SPI	0x209100c8	U1	-	-	Output rate of the NMEA-GX-GSV message on port SPI
CFG-MSGOUT-NMEA_ID_GSV_UART1	0x209100c5	U1	-	-	Output rate of the NMEA-GX-GSV message on port UART1
CFG-MSGOUT-NMEA_ID_GSV_UART2	0x209100c6	U1	-	-	Output rate of the NMEA-GX-GSV message on port UART2
CFG-MSGOUT-NMEA_ID_GSV_USB	0x209100c7	U1	-	-	Output rate of the NMEA-GX-GSV message on port USB
CFG-MSGOUT-NMEA_ID_RLM_I2C	0x20910400	U1	-	-	Output rate of the NMEA-GX-RLM message on port I2C
CFG-MSGOUT-NMEA_ID_RLM_SPI	0x20910404	U1	-	-	Output rate of the NMEA-GX-RLM message on port SPI
CFG-MSGOUT-NMEA_ID_RLM_UART1	0x20910401	U1	-	-	Output rate of the NMEA-GX-RLM message on port UART1
CFG-MSGOUT-NMEA_ID_RLM_UART2	0x20910402	U1	-	-	Output rate of the NMEA-GX-RLM message on port UART2
CFG-MSGOUT-NMEA_ID_RLM_USB	0x20910403	U1	-	-	Output rate of the NMEA-GX-RLM message on port USB
CFG-MSGOUT-NMEA_ID_RMC_I2C	0x209100ab	U1	-	-	Output rate of the NMEA-GX-RMC message on port I2C
CFG-MSGOUT-NMEA_ID_RMC_SPI	0x209100af	U1	-	-	Output rate of the NMEA-GX-RMC message on port SPI
CFG-MSGOUT-NMEA_ID_RMC_UART1	0x209100ac	U1	-	-	Output rate of the NMEA-GX-RMC message on port UART1
CFG-MSGOUT-NMEA_ID_RMC_UART2	0x209100ad	U1	-	-	Output rate of the NMEA-GX-RMC message on port UART2
CFG-MSGOUT-NMEA_ID_RMC_USB	0x209100ae	U1	-	-	Output rate of the NMEA-GX-RMC message on port USB
CFG-MSGOUT-NMEA_ID_VLW_I2C	0x209100e7	U1	-	-	Output rate of the NMEA-GX-VLW message on port I2C
CFG-MSGOUT-NMEA_ID_VLW_SPI	0x209100eb	U1	-	-	Output rate of the NMEA-GX-VLW message on port SPI
CFG-MSGOUT-NMEA_ID_VLW_UART1	0x209100e8	U1	-	-	Output rate of the NMEA-GX-VLW message on port UART1
CFG-MSGOUT-NMEA_ID_VLW_UART2	0x209100e9	U1	-	-	Output rate of the NMEA-GX-VLW message on port UART2
CFG-MSGOUT-NMEA_ID_VLW_USB	0x209100ea	U1	-	-	Output rate of the NMEA-GX-VLW message on port USB
CFG-MSGOUT-NMEA_ID_VTG_I2C	0x209100b0	U1	-	-	Output rate of the NMEA-GX-VTG message on port I2C
CFG-MSGOUT-NMEA_ID_VTG_SPI	0x209100b4	U1	-	-	Output rate of the NMEA-GX-VTG message on port SPI
CFG-MSGOUT-NMEA_ID_VTG_UART1	0x209100b1	U1	-	-	Output rate of the NMEA-GX-VTG message on port UART1

CONFIDENTIAL

Configuration item	Key ID	Type	Scale	Unit	Description
CFG-MSGOUT-NMEA_ID_VTG_UART2	0x209100b2	U1	-	-	Output rate of the NMEA-GX-VTG message on port UART2
CFG-MSGOUT-NMEA_ID_VTG_USB	0x209100b3	U1	-	-	Output rate of the NMEA-GX-VTG message on port USB
CFG-MSGOUT-NMEA_ID_ZDA_I2C	0x209100d8	U1	-	-	Output rate of the NMEA-GX-ZDA message on port I2C
CFG-MSGOUT-NMEA_ID_ZDA_SPI	0x209100dc	U1	-	-	Output rate of the NMEA-GX-ZDA message on port SPI
CFG-MSGOUT-NMEA_ID_ZDA_UART1	0x209100d9	U1	-	-	Output rate of the NMEA-GX-ZDA message on port UART1
CFG-MSGOUT-NMEA_ID_ZDA_UART2	0x209100da	U1	-	-	Output rate of the NMEA-GX-ZDA message on port UART2
CFG-MSGOUT-NMEA_ID_ZDA_USB	0x209100db	U1	-	-	Output rate of the NMEA-GX-ZDA message on port USB
CFG-MSGOUT-PUBX_ID_POLYP_I2C	0x209100ec	U1	-	-	Output rate of the NMEA-GX-PUBX00 message on port I2C
CFG-MSGOUT-PUBX_ID_POLYP_SPI	0x209100f0	U1	-	-	Output rate of the NMEA-GX-PUBX00 message on port SPI
CFG-MSGOUT-PUBX_ID_POLYP_ UART1	0x209100ed	U1	-	-	Output rate of the NMEA-GX-PUBX00 message on port UART1
CFG-MSGOUT-PUBX_ID_POLYP_ UART2	0x209100ee	U1	-	-	Output rate of the NMEA-GX-PUBX00 message on port UART2
CFG-MSGOUT-PUBX_ID_POLYP_USB	0x209100ef	U1	-	-	Output rate of the NMEA-GX-PUBX00 message on port USB
CFG-MSGOUT-PUBX_ID_POLYS_I2C	0x209100f1	U1	-	-	Output rate of the NMEA-GX-PUBX03 message on port I2C
CFG-MSGOUT-PUBX_ID_POLYS_SPI	0x209100f5	U1	-	-	Output rate of the NMEA-GX-PUBX03 message on port SPI
CFG-MSGOUT-PUBX_ID_POLYS_ UART1	0x209100f2	U1	-	-	Output rate of the NMEA-GX-PUBX03 message on port UART1
CFG-MSGOUT-PUBX_ID_POLYS_ UART2	0x209100f3	U1	-	-	Output rate of the NMEA-GX-PUBX03 message on port UART2
CFG-MSGOUT-PUBX_ID_POLYS_USB	0x209100f4	U1	-	-	Output rate of the NMEA-GX-PUBX03 message on port USB
CFG-MSGOUT-PUBX_ID_POLYT_I2C	0x209100f6	U1	-	-	Output rate of the NMEA-GX-PUBX04 message on port I2C
CFG-MSGOUT-PUBX_ID_POLYT_SPI	0x209100fa	U1	-	-	Output rate of the NMEA-GX-PUBX04 message on port SPI
CFG-MSGOUT-PUBX_ID_POLYT_ UART1	0x209100f7	U1	-	-	Output rate of the NMEA-GX-PUBX04 message on port UART1
CFG-MSGOUT-PUBX_ID_POLYT_ UART2	0x209100f8	U1	-	-	Output rate of the NMEA-GX-PUBX04 message on port UART2
CFG-MSGOUT-PUBX_ID_POLYT_USB	0x209100f9	U1	-	-	Output rate of the NMEA-GX-PUBX04 message on port USB
CFG-MSGOUT-UBX_LOG_INFO_I2C	0x20910259	U1	-	-	Output rate of the UBX-LOG-INFO message on port I2C
CFG-MSGOUT-UBX_LOG_INFO_SPI	0x2091025d	U1	-	-	Output rate of the UBX-LOG-INFO message on port SPI
CFG-MSGOUT-UBX_LOG_INFO_ UART1	0x2091025a	U1	-	-	Output rate of the UBX-LOG-INFO message on port UART1
CFG-MSGOUT-UBX_LOG_INFO_ UART2	0x2091025b	U1	-	-	Output rate of the UBX-LOG-INFO message on port UART2

CONFIDENTIAL

Configuration item	Key ID	Type	Scale	Unit	Description
CFG-MSGOUT-UBX_LOG_INFO_USB	0x2091025c	U1	-	-	Output rate of the UBX-LOG-INFO message on port USB
CFG-MSGOUT-UBX_MON_COMMS_I2C	0x2091034f	U1	-	-	Output rate of the UBX-MON-COMMS message on port I2C
CFG-MSGOUT-UBX_MON_COMMS_SPI	0x20910353	U1	-	-	Output rate of the UBX-MON-COMMS message on port SPI
CFG-MSGOUT-UBX_MON_COMMS_UART1	0x20910350	U1	-	-	Output rate of the UBX-MON-COMMS message on port UART1
CFG-MSGOUT-UBX_MON_COMMS_UART2	0x20910351	U1	-	-	Output rate of the UBX-MON-COMMS message on port UART2
CFG-MSGOUT-UBX_MON_COMMS_USB	0x20910352	U1	-	-	Output rate of the UBX-MON-COMMS message on port USB
CFG-MSGOUT-UBX_MON_HW2_I2C	0x209101b9	U1	-	-	Output rate of the UBX-MON-HW2 message on port I2C
CFG-MSGOUT-UBX_MON_HW2_SPI	0x209101bd	U1	-	-	Output rate of the UBX-MON-HW2 message on port SPI
CFG-MSGOUT-UBX_MON_HW2_UART1	0x209101ba	U1	-	-	Output rate of the UBX-MON-HW2 message on port UART1
CFG-MSGOUT-UBX_MON_HW2_UART2	0x209101bb	U1	-	-	Output rate of the UBX-MON-HW2 message on port UART2
CFG-MSGOUT-UBX_MON_HW2_USB	0x209101bc	U1	-	-	Output rate of the UBX-MON-HW2 message on port USB
CFG-MSGOUT-UBX_MON_HW3_I2C	0x20910354	U1	-	-	Output rate of the UBX-MON-HW3 message on port I2C
CFG-MSGOUT-UBX_MON_HW3_SPI	0x20910358	U1	-	-	Output rate of the UBX-MON-HW3 message on port SPI
CFG-MSGOUT-UBX_MON_HW3_UART1	0x20910355	U1	-	-	Output rate of the UBX-MON-HW3 message on port UART1
CFG-MSGOUT-UBX_MON_HW3_UART2	0x20910356	U1	-	-	Output rate of the UBX-MON-HW3 message on port UART2
CFG-MSGOUT-UBX_MON_HW3_USB	0x20910357	U1	-	-	Output rate of the UBX-MON-HW3 message on port USB
CFG-MSGOUT-UBX_MON_HW_I2C	0x209101b4	U1	-	-	Output rate of the UBX-MON-HW message on port I2C
CFG-MSGOUT-UBX_MON_HW_SPI	0x209101b8	U1	-	-	Output rate of the UBX-MON-HW message on port SPI
CFG-MSGOUT-UBX_MON_HW_UART1	0x209101b5	U1	-	-	Output rate of the UBX-MON-HW message on port UART1
CFG-MSGOUT-UBX_MON_HW_UART2	0x209101b6	U1	-	-	Output rate of the UBX-MON-HW message on port UART2
CFG-MSGOUT-UBX_MON_HW_USB	0x209101b7	U1	-	-	Output rate of the UBX-MON-HW message on port USB
CFG-MSGOUT-UBX_MON_IO_I2C	0x209101a5	U1	-	-	Output rate of the UBX-MON-IO message on port I2C
CFG-MSGOUT-UBX_MON_IO_SPI	0x209101a9	U1	-	-	Output rate of the UBX-MON-IO message on port SPI
CFG-MSGOUT-UBX_MON_IO_UART1	0x209101a6	U1	-	-	Output rate of the UBX-MON-IO message on port UART1
CFG-MSGOUT-UBX_MON_IO_UART2	0x209101a7	U1	-	-	Output rate of the UBX-MON-IO message on port UART2
CFG-MSGOUT-UBX_MON_IO_USB	0x209101a8	U1	-	-	Output rate of the UBX-MON-IO message on port USB

CONFIDENTIAL

Configuration item	Key ID	Type	Scale	Unit	Description
CFG-MSGOUT-UBX_MON_MSGPP_I2C	0x20910196	U1	-	-	Output rate of the UBX-MON-MSGPP message on port I2C
CFG-MSGOUT-UBX_MON_MSGPP_SPI	0x2091019a	U1	-	-	Output rate of the UBX-MON-MSGPP message on port SPI
CFG-MSGOUT-UBX_MON_MSGPP_UART1	0x20910197	U1	-	-	Output rate of the UBX-MON-MSGPP message on port UART1
CFG-MSGOUT-UBX_MON_MSGPP_UART2	0x20910198	U1	-	-	Output rate of the UBX-MON-MSGPP message on port UART2
CFG-MSGOUT-UBX_MON_MSGPP_USB	0x20910199	U1	-	-	Output rate of the UBX-MON-MSGPP message on port USB
CFG-MSGOUT-UBX_MON_PT2_I2C	0x20910209	U1	-	-	Output rate of the UBX-MON-PT2 message on port I2C
CFG-MSGOUT-UBX_MON_PT2_SPI	0x2091020d	U1	-	-	Output rate of the UBX-MON-PT2 message on port SPI
CFG-MSGOUT-UBX_MON_PT2_UART1	0x2091020a	U1	-	-	Output rate of the UBX-MON-PT2 message on port UART1
CFG-MSGOUT-UBX_MON_PT2_UART2	0x2091020b	U1	-	-	Output rate of the UBX-MON-PT2 message on port UART2
CFG-MSGOUT-UBX_MON_PT2_USB	0x2091020c	U1	-	-	Output rate of the UBX-MON-PT2 message on port USB
CFG-MSGOUT-UBX_MON_RF_I2C	0x20910359	U1	-	-	Output rate of the UBX-MON-RF message on port I2C
CFG-MSGOUT-UBX_MON_RF_SPI	0x2091035d	U1	-	-	Output rate of the UBX-MON-RF message on port SPI
CFG-MSGOUT-UBX_MON_RF_UART1	0x2091035a	U1	-	-	Output rate of the UBX-MON-RF message on port UART1
CFG-MSGOUT-UBX_MON_RF_UART2	0x2091035b	U1	-	-	Output rate of the UBX-MON-RF message on port UART2
CFG-MSGOUT-UBX_MON_RF_USB	0x2091035c	U1	-	-	Output rate of the UBX-MON-RF message on port USB
CFG-MSGOUT-UBX_MON_RXBUF_I2C	0x209101a0	U1	-	-	Output rate of the UBX-MON-RXBUF message on port I2C
CFG-MSGOUT-UBX_MON_RXBUF_SPI	0x209101a4	U1	-	-	Output rate of the UBX-MON-RXBUF message on port SPI
CFG-MSGOUT-UBX_MON_RXBUF_UART1	0x209101a1	U1	-	-	Output rate of the UBX-MON-RXBUF message on port UART1
CFG-MSGOUT-UBX_MON_RXBUF_UART2	0x209101a2	U1	-	-	Output rate of the UBX-MON-RXBUF message on port UART2
CFG-MSGOUT-UBX_MON_RXBUF_USB	0x209101a3	U1	-	-	Output rate of the UBX-MON-RXBUF message on port USB
CFG-MSGOUT-UBX_MON_RXR_I2C	0x20910187	U1	-	-	Output rate of the UBX-MON-RXR message on port I2C
CFG-MSGOUT-UBX_MON_RXR_SPI	0x2091018b	U1	-	-	Output rate of the UBX-MON-RXR message on port SPI
CFG-MSGOUT-UBX_MON_RXR_UART1	0x20910188	U1	-	-	Output rate of the UBX-MON-RXR message on port UART1
CFG-MSGOUT-UBX_MON_RXR_UART2	0x20910189	U1	-	-	Output rate of the UBX-MON-RXR message on port UART2
CFG-MSGOUT-UBX_MON_RXR_USB	0x2091018a	U1	-	-	Output rate of the UBX-MON-RXR message on port USB
CFG-MSGOUT-UBX_MON_SPAN_I2C	0x2091038b	U1	-	-	Output rate of the UBX-MON-SPAN message on port I2C

CONFIDENTIAL

Configuration item	Key ID	Type	Scale	Unit	Description
CFG-MSGOUT-UBX_MON_SPAN_SPI	0x2091038f	U1	-	-	Output rate of the UBX-MON-SPAN message on port SPI
CFG-MSGOUT-UBX_MON_SPAN_UART1	0x2091038c	U1	-	-	Output rate of the UBX-MON-SPAN message on port UART1
CFG-MSGOUT-UBX_MON_SPAN_UART2	0x2091038d	U1	-	-	Output rate of the UBX-MON-SPAN message on port UART2
CFG-MSGOUT-UBX_MON_SPAN_USB	0x2091038e	U1	-	-	Output rate of the UBX-MON-SPAN message on port USB
CFG-MSGOUT-UBX_MON_TEMP_I2C	0x20910331	U1	-	-	Output rate of the UBX-MON-TEMP message on port I2C
CFG-MSGOUT-UBX_MON_TEMP_SPI	0x20910335	U1	-	-	Output rate of the UBX-MON-TEMP message on port SPI
CFG-MSGOUT-UBX_MON_TEMP_UART1	0x20910332	U1	-	-	Output rate of the UBX-MON-TEMP message on port UART1
CFG-MSGOUT-UBX_MON_TEMP_UART2	0x20910333	U1	-	-	Output rate of the UBX-MON-TEMP message on port UART2
CFG-MSGOUT-UBX_MON_TEMP_USB	0x20910334	U1	-	-	Output rate of the UBX-MON-TEMP message on port USB
CFG-MSGOUT-UBX_MON_TXBUF_I2C	0x2091019b	U1	-	-	Output rate of the UBX-MON-TXBUF message on port I2C
CFG-MSGOUT-UBX_MON_TXBUF_SPI	0x2091019f	U1	-	-	Output rate of the UBX-MON-TXBUF message on port SPI
CFG-MSGOUT-UBX_MON_TXBUF_UART1	0x2091019c	U1	-	-	Output rate of the UBX-MON-TXBUF message on port UART1
CFG-MSGOUT-UBX_MON_TXBUF_UART2	0x2091019d	U1	-	-	Output rate of the UBX-MON-TXBUF message on port UART2
CFG-MSGOUT-UBX_MON_TXBUF_USB	0x2091019e	U1	-	-	Output rate of the UBX-MON-TXBUF message on port USB
CFG-MSGOUT-UBX_NAV_AOPSTATUS_I2C	0x20910079	U1	-	-	Output rate of the UBX-NAV-AOPSTATUS message on port I2C
CFG-MSGOUT-UBX_NAV_AOPSTATUS_SPI	0x2091007d	U1	-	-	Output rate of the UBX-NAV-AOPSTATUS message on port SPI
CFG-MSGOUT-UBX_NAV_AOPSTATUS_UART1	0x2091007a	U1	-	-	Output rate of the UBX-NAV-AOPSTATUS message on port UART1
CFG-MSGOUT-UBX_NAV_AOPSTATUS_UART2	0x2091007b	U1	-	-	Output rate of the UBX-NAV-AOPSTATUS message on port UART2
CFG-MSGOUT-UBX_NAV_AOPSTATUS_USB	0x2091007c	U1	-	-	Output rate of the UBX-NAV-AOPSTATUS message on port USB
CFG-MSGOUT-UBX_NAV_CLOCK_I2C	0x20910065	U1	-	-	Output rate of the UBX-NAV-CLOCK message on port I2C
CFG-MSGOUT-UBX_NAV_CLOCK_SPI	0x20910069	U1	-	-	Output rate of the UBX-NAV-CLOCK message on port SPI
CFG-MSGOUT-UBX_NAV_CLOCK_UART1	0x20910066	U1	-	-	Output rate of the UBX-NAV-CLOCK message on port UART1
CFG-MSGOUT-UBX_NAV_CLOCK_UART2	0x20910067	U1	-	-	Output rate of the UBX-NAV-CLOCK message on port UART2
CFG-MSGOUT-UBX_NAV_CLOCK_USB	0x20910068	U1	-	-	Output rate of the UBX-NAV-CLOCK message on port USB
CFG-MSGOUT-UBX_NAV_COV_I2C	0x20910083	U1	-	-	Output rate of the UBX-NAV-COV message on port I2C
CFG-MSGOUT-UBX_NAV_COV_SPI	0x20910087	U1	-	-	Output rate of the UBX-NAV-COV message on port SPI

CONFIDENTIAL

Configuration item	Key ID	Type	Scale	Unit	Description
CFG-MSGOUT-UBX_NAV_COV_UART1	0x20910084	U1	-	-	Output rate of the UBX-NAV-COV message on port UART1
CFG-MSGOUT-UBX_NAV_COV_UART2	0x20910085	U1	-	-	Output rate of the UBX-NAV-COV message on port UART2
CFG-MSGOUT-UBX_NAV_COV_USB	0x20910086	U1	-	-	Output rate of the UBX-NAV-COV message on port USB
CFG-MSGOUT-UBX_NAV_DOP_I2C	0x20910038	U1	-	-	Output rate of the UBX-NAV-DOP message on port I2C
CFG-MSGOUT-UBX_NAV_DOP_SPI	0x2091003c	U1	-	-	Output rate of the UBX-NAV-DOP message on port SPI
CFG-MSGOUT-UBX_NAV_DOP_UART1	0x20910039	U1	-	-	Output rate of the UBX-NAV-DOP message on port UART1
CFG-MSGOUT-UBX_NAV_DOP_UART2	0x2091003a	U1	-	-	Output rate of the UBX-NAV-DOP message on port UART2
CFG-MSGOUT-UBX_NAV_DOP_USB	0x2091003b	U1	-	-	Output rate of the UBX-NAV-DOP message on port USB
CFG-MSGOUT-UBX_NAV_EELL_I2C	0x20910313	U1	-	-	Output rate of the UBX-NAV-EELL message on port I2C
CFG-MSGOUT-UBX_NAV_EELL_SPI	0x20910317	U1	-	-	Output rate of the UBX-NAV-EELL message on port SPI
CFG-MSGOUT-UBX_NAV_EELL_UART1	0x20910314	U1	-	-	Output rate of the UBX-NAV-EELL message on port UART1
CFG-MSGOUT-UBX_NAV_EELL_UART2	0x20910315	U1	-	-	Output rate of the UBX-NAV-EELL message on port UART2
CFG-MSGOUT-UBX_NAV_EELL_USB	0x20910316	U1	-	-	Output rate of the UBX-NAV-EELL message on port USB
CFG-MSGOUT-UBX_NAV_EOE_I2C	0x2091015f	U1	-	-	Output rate of the UBX-NAV-EOE message on port I2C
CFG-MSGOUT-UBX_NAV_EOE_SPI	0x20910163	U1	-	-	Output rate of the UBX-NAV-EOE message on port SPI
CFG-MSGOUT-UBX_NAV_EOE_UART1	0x20910160	U1	-	-	Output rate of the UBX-NAV-EOE message on port UART1
CFG-MSGOUT-UBX_NAV_EOE_UART2	0x20910161	U1	-	-	Output rate of the UBX-NAV-EOE message on port UART2
CFG-MSGOUT-UBX_NAV_EOE_USB	0x20910162	U1	-	-	Output rate of the UBX-NAV-EOE message on port USB
CFG-MSGOUT-UBX_NAV_GEOFENCE_I2C	0x209100a1	U1	-	-	Output rate of the UBX-NAV-GEOFENCE message on port I2C
CFG-MSGOUT-UBX_NAV_GEOFENCE_SPI	0x209100a5	U1	-	-	Output rate of the UBX-NAV-GEOFENCE message on port SPI
CFG-MSGOUT-UBX_NAV_GEOFENCE_UART1	0x209100a2	U1	-	-	Output rate of the UBX-NAV-GEOFENCE message on port UART1
CFG-MSGOUT-UBX_NAV_GEOFENCE_UART2	0x209100a3	U1	-	-	Output rate of the UBX-NAV-GEOFENCE message on port UART2
CFG-MSGOUT-UBX_NAV_GEOFENCE_USB	0x209100a4	U1	-	-	Output rate of the UBX-NAV-GEOFENCE message on port USB
CFG-MSGOUT-UBX_NAV_ODO_I2C	0x2091007e	U1	-	-	Output rate of the UBX-NAV-ODO message on port I2C
CFG-MSGOUT-UBX_NAV_ODO_SPI	0x20910082	U1	-	-	Output rate of the UBX-NAV-ODO message on port SPI
CFG-MSGOUT-UBX_NAV_ODO_UART1	0x2091007f	U1	-	-	Output rate of the UBX-NAV-ODO message on port UART1

CONFIDENTIAL

Configuration item	Key ID	Type	Scale	Unit	Description
CFG-MSGOUT-UBX_NAV_ODO_UART2	0x20910080	U1	-	-	Output rate of the UBX-NAV-ODO message on port UART2
CFG-MSGOUT-UBX_NAV_ODO_USB	0x20910081	U1	-	-	Output rate of the UBX-NAV-ODO message on port USB
CFG-MSGOUT-UBX_NAV_ORB_I2C	0x20910010	U1	-	-	Output rate of the UBX-NAV-ORB message on port I2C
CFG-MSGOUT-UBX_NAV_ORB_SPI	0x20910014	U1	-	-	Output rate of the UBX-NAV-ORB message on port SPI
CFG-MSGOUT-UBX_NAV_ORB_UART1	0x20910011	U1	-	-	Output rate of the UBX-NAV-ORB message on port UART1
CFG-MSGOUT-UBX_NAV_ORB_UART2	0x20910012	U1	-	-	Output rate of the UBX-NAV-ORB message on port UART2
CFG-MSGOUT-UBX_NAV_ORB_USB	0x20910013	U1	-	-	Output rate of the UBX-NAV-ORB message on port USB
CFG-MSGOUT-UBX_NAV_POSECEF_I2C	0x20910024	U1	-	-	Output rate of the UBX-NAV-POSECEF message on port I2C
CFG-MSGOUT-UBX_NAV_POSECEF_SPI	0x20910028	U1	-	-	Output rate of the UBX-NAV-POSECEF message on port SPI
CFG-MSGOUT-UBX_NAV_POSECEF_UART1	0x20910025	U1	-	-	Output rate of the UBX-NAV-POSECEF message on port UART1
CFG-MSGOUT-UBX_NAV_POSECEF_UART2	0x20910026	U1	-	-	Output rate of the UBX-NAV-POSECEF message on port UART2
CFG-MSGOUT-UBX_NAV_POSECEF_USB	0x20910027	U1	-	-	Output rate of the UBX-NAV-POSECEF message on port USB
CFG-MSGOUT-UBX_NAV_POSLLH_I2C	0x20910029	U1	-	-	Output rate of the UBX-NAV-POSLLH message on port I2C
CFG-MSGOUT-UBX_NAV_POSLLH_SPI	0x2091002d	U1	-	-	Output rate of the UBX-NAV-POSLLH message on port SPI
CFG-MSGOUT-UBX_NAV_POSLLH_UART1	0x2091002a	U1	-	-	Output rate of the UBX-NAV-POSLLH message on port UART1
CFG-MSGOUT-UBX_NAV_POSLLH_UART2	0x2091002b	U1	-	-	Output rate of the UBX-NAV-POSLLH message on port UART2
CFG-MSGOUT-UBX_NAV_POSLLH_USB	0x2091002c	U1	-	-	Output rate of the UBX-NAV-POSLLH message on port USB
CFG-MSGOUT-UBX_NAV_PVT_I2C	0x20910006	U1	-	-	Output rate of the UBX-NAV-PVT message on port I2C
CFG-MSGOUT-UBX_NAV_PVT_SPI	0x2091000a	U1	-	-	Output rate of the UBX-NAV-PVT message on port SPI
CFG-MSGOUT-UBX_NAV_PVT_UART1	0x20910007	U1	-	-	Output rate of the UBX-NAV-PVT message on port UART1
CFG-MSGOUT-UBX_NAV_PVT_UART2	0x20910008	U1	-	-	Output rate of the UBX-NAV-PVT message on port UART2
CFG-MSGOUT-UBX_NAV_PVT_USB	0x20910009	U1	-	-	Output rate of the UBX-NAV-PVT message on port USB
CFG-MSGOUT-UBX_NAV_SAT_I2C	0x20910015	U1	-	-	Output rate of the UBX-NAV-SAT message on port I2C
CFG-MSGOUT-UBX_NAV_SAT_SPI	0x20910019	U1	-	-	Output rate of the UBX-NAV-SAT message on port SPI
CFG-MSGOUT-UBX_NAV_SAT_UART1	0x20910016	U1	-	-	Output rate of the UBX-NAV-SAT message on port UART1
CFG-MSGOUT-UBX_NAV_SAT_UART2	0x20910017	U1	-	-	Output rate of the UBX-NAV-SAT message on port UART2

CONFIDENTIAL

Configuration item	Key ID	Type	Scale	Unit	Description
CFG-MSGOUT-UBX_NAV_SAT_USB	0x20910018	U1	-	-	Output rate of the UBX-NAV-SAT message on port USB
CFG-MSGOUT-UBX_NAV_SBAS_I2C	0x2091006a	U1	-	-	Output rate of the UBX-NAV-SBAS message on port I2C
CFG-MSGOUT-UBX_NAV_SBAS_SPI	0x2091006e	U1	-	-	Output rate of the UBX-NAV-SBAS message on port SPI
CFG-MSGOUT-UBX_NAV_SBAS_ UART1	0x2091006b	U1	-	-	Output rate of the UBX-NAV-SBAS message on port UART1
CFG-MSGOUT-UBX_NAV_SBAS_ UART2	0x2091006c	U1	-	-	Output rate of the UBX-NAV-SBAS message on port UART2
CFG-MSGOUT-UBX_NAV_SBAS_USB	0x2091006d	U1	-	-	Output rate of the UBX-NAV-SBAS message on port USB
CFG-MSGOUT-UBX_NAV_SIG_I2C	0x20910345	U1	-	-	Output rate of the UBX-NAV-SIG message on port I2C
CFG-MSGOUT-UBX_NAV_SIG_SPI	0x20910349	U1	-	-	Output rate of the UBX-NAV-SIG message on port SPI
CFG-MSGOUT-UBX_NAV_SIG_UART1	0x20910346	U1	-	-	Output rate of the UBX-NAV-SIG message on port UART1
CFG-MSGOUT-UBX_NAV_SIG_UART2	0x20910347	U1	-	-	Output rate of the UBX-NAV-SIG message on port UART2
CFG-MSGOUT-UBX_NAV_SIG_USB	0x20910348	U1	-	-	Output rate of the UBX-NAV-SIG message on port USB
CFG-MSGOUT-UBX_NAV_SLAS_I2C	0x20910336	U1	-	-	Output rate of the UBX-NAV-SLAS message on port I2C
CFG-MSGOUT-UBX_NAV_SLAS_SPI	0x2091033a	U1	-	-	Output rate of the UBX-NAV-SLAS message on port SPI
CFG-MSGOUT-UBX_NAV_SLAS_ UART1	0x20910337	U1	-	-	Output rate of the UBX-NAV-SLAS message on port UART1
CFG-MSGOUT-UBX_NAV_SLAS_ UART2	0x20910338	U1	-	-	Output rate of the UBX-NAV-SLAS message on port UART2
CFG-MSGOUT-UBX_NAV_SLAS_USB	0x20910339	U1	-	-	Output rate of the UBX-NAV-SLAS message on port USB
CFG-MSGOUT-UBX_NAV_STATUS_ I2C	0x2091001a	U1	-	-	Output rate of the UBX-NAV-STATUS message on port I2C
CFG-MSGOUT-UBX_NAV_STATUS_SPI	0x2091001e	U1	-	-	Output rate of the UBX-NAV-STATUS message on port SPI
CFG-MSGOUT-UBX_NAV_STATUS_ UART1	0x2091001b	U1	-	-	Output rate of the UBX-NAV-STATUS message on port UART1
CFG-MSGOUT-UBX_NAV_STATUS_ UART2	0x2091001c	U1	-	-	Output rate of the UBX-NAV-STATUS message on port UART2
CFG-MSGOUT-UBX_NAV_STATUS_ USB	0x2091001d	U1	-	-	Output rate of the UBX-NAV-STATUS message on port USB
CFG-MSGOUT-UBX_NAV_TIMEBDS_ I2C	0x20910051	U1	-	-	Output rate of the UBX-NAV-TIMEBDS message on port I2C
CFG-MSGOUT-UBX_NAV_TIMEBDS_ SPI	0x20910055	U1	-	-	Output rate of the UBX-NAV-TIMEBDS message on port SPI
CFG-MSGOUT-UBX_NAV_TIMEBDS_ UART1	0x20910052	U1	-	-	Output rate of the UBX-NAV-TIMEBDS message on port UART1
CFG-MSGOUT-UBX_NAV_TIMEBDS_ UART2	0x20910053	U1	-	-	Output rate of the UBX-NAV-TIMEBDS message on port UART2
CFG-MSGOUT-UBX_NAV_TIMEBDS_ USB	0x20910054	U1	-	-	Output rate of the UBX-NAV-TIMEBDS message on port USB

CONFIDENTIAL

Configuration item	Key ID	Type	Scale	Unit	Description
CFG-MSGOUT-UBX_NAV_TIMEGAL_I2C	0x20910056	U1	-	-	Output rate of the UBX-NAV-TIMEGAL message on port I2C
CFG-MSGOUT-UBX_NAV_TIMEGAL_SPI	0x2091005a	U1	-	-	Output rate of the UBX-NAV-TIMEGAL message on port SPI
CFG-MSGOUT-UBX_NAV_TIMEGAL_UART1	0x20910057	U1	-	-	Output rate of the UBX-NAV-TIMEGAL message on port UART1
CFG-MSGOUT-UBX_NAV_TIMEGAL_UART2	0x20910058	U1	-	-	Output rate of the UBX-NAV-TIMEGAL message on port UART2
CFG-MSGOUT-UBX_NAV_TIMEGAL_USB	0x20910059	U1	-	-	Output rate of the UBX-NAV-TIMEGAL message on port USB
CFG-MSGOUT-UBX_NAV_TIMEGLO_I2C	0x2091004c	U1	-	-	Output rate of the UBX-NAV-TIMEGLO message on port I2C
CFG-MSGOUT-UBX_NAV_TIMEGLO_SPI	0x20910050	U1	-	-	Output rate of the UBX-NAV-TIMEGLO message on port SPI
CFG-MSGOUT-UBX_NAV_TIMEGLO_UART1	0x2091004d	U1	-	-	Output rate of the UBX-NAV-TIMEGLO message on port UART1
CFG-MSGOUT-UBX_NAV_TIMEGLO_UART2	0x2091004e	U1	-	-	Output rate of the UBX-NAV-TIMEGLO message on port UART2
CFG-MSGOUT-UBX_NAV_TIMEGLO_USB	0x2091004f	U1	-	-	Output rate of the UBX-NAV-TIMEGLO message on port USB
CFG-MSGOUT-UBX_NAV_TIMEGPS_I2C	0x20910047	U1	-	-	Output rate of the UBX-NAV-TIMEGPS message on port I2C
CFG-MSGOUT-UBX_NAV_TIMEGPS_SPI	0x2091004b	U1	-	-	Output rate of the UBX-NAV-TIMEGPS message on port SPI
CFG-MSGOUT-UBX_NAV_TIMEGPS_UART1	0x20910048	U1	-	-	Output rate of the UBX-NAV-TIMEGPS message on port UART1
CFG-MSGOUT-UBX_NAV_TIMEGPS_UART2	0x20910049	U1	-	-	Output rate of the UBX-NAV-TIMEGPS message on port UART2
CFG-MSGOUT-UBX_NAV_TIMEGPS_USB	0x2091004a	U1	-	-	Output rate of the UBX-NAV-TIMEGPS message on port USB
CFG-MSGOUT-UBX_NAV_TIMELS_I2C	0x20910060	U1	-	-	Output rate of the UBX-NAV-TIMELS message on port I2C
CFG-MSGOUT-UBX_NAV_TIMELS_SPI	0x20910064	U1	-	-	Output rate of the UBX-NAV-TIMELS message on port SPI
CFG-MSGOUT-UBX_NAV_TIMELS_UART1	0x20910061	U1	-	-	Output rate of the UBX-NAV-TIMELS message on port UART1
CFG-MSGOUT-UBX_NAV_TIMELS_UART2	0x20910062	U1	-	-	Output rate of the UBX-NAV-TIMELS message on port UART2
CFG-MSGOUT-UBX_NAV_TIMELS_USB	0x20910063	U1	-	-	Output rate of the UBX-NAV-TIMELS message on port USB
CFG-MSGOUT-UBX_NAV_TIMEQZSS_I2C	0x20910386	U1	-	-	Output rate of the UBX-NAV-TIMEQZSS message on port I2C
CFG-MSGOUT-UBX_NAV_TIMEQZSS_SPI	0x2091038a	U1	-	-	Output rate of the UBX-NAV-TIMEQZSS message on port SPI
CFG-MSGOUT-UBX_NAV_TIMEQZSS_UART1	0x20910387	U1	-	-	Output rate of the UBX-NAV-TIMEQZSS message on port UART1
CFG-MSGOUT-UBX_NAV_TIMEQZSS_UART2	0x20910388	U1	-	-	Output rate of the UBX-NAV-TIMEQZSS message on port UART2
CFG-MSGOUT-UBX_NAV_TIMEQZSS_USB	0x20910389	U1	-	-	Output rate of the UBX-NAV-TIMEQZSS message on port USB
CFG-MSGOUT-UBX_NAV_TIMEUTC_I2C	0x2091005b	U1	-	-	Output rate of the UBX-NAV-TIMEUTC message on port I2C

CONFIDENTIAL

Configuration item	Key ID	Type	Scale	Unit	Description
CFG-MSGOUT-UBX_NAV_TIMEUTC_SPI	0x2091005f	U1	-	-	Output rate of the UBX-NAV-TIMEUTC message on port SPI
CFG-MSGOUT-UBX_NAV_TIMEUTC_UART1	0x2091005c	U1	-	-	Output rate of the UBX-NAV-TIMEUTC message on port UART1
CFG-MSGOUT-UBX_NAV_TIMEUTC_UART2	0x2091005d	U1	-	-	Output rate of the UBX-NAV-TIMEUTC message on port UART2
CFG-MSGOUT-UBX_NAV_TIMEUTC_USB	0x2091005e	U1	-	-	Output rate of the UBX-NAV-TIMEUTC message on port USB
CFG-MSGOUT-UBX_NAV_VELECEF_I2C	0x2091003d	U1	-	-	Output rate of the UBX-NAV-VELECEF message on port I2C
CFG-MSGOUT-UBX_NAV_VELECEF_SPI	0x20910041	U1	-	-	Output rate of the UBX-NAV-VELECEF message on port SPI
CFG-MSGOUT-UBX_NAV_VELECEF_UART1	0x2091003e	U1	-	-	Output rate of the UBX-NAV-VELECEF message on port UART1
CFG-MSGOUT-UBX_NAV_VELECEF_UART2	0x2091003f	U1	-	-	Output rate of the UBX-NAV-VELECEF message on port UART2
CFG-MSGOUT-UBX_NAV_VELECEF_USB	0x20910040	U1	-	-	Output rate of the UBX-NAV-VELECEF message on port USB
CFG-MSGOUT-UBX_NAV_VELNED_I2C	0x20910042	U1	-	-	Output rate of the UBX-NAV-VELNED message on port I2C
CFG-MSGOUT-UBX_NAV_VELNED_SPI	0x20910046	U1	-	-	Output rate of the UBX-NAV-VELNED message on port SPI
CFG-MSGOUT-UBX_NAV_VELNED_UART1	0x20910043	U1	-	-	Output rate of the UBX-NAV-VELNED message on port UART1
CFG-MSGOUT-UBX_NAV_VELNED_UART2	0x20910044	U1	-	-	Output rate of the UBX-NAV-VELNED message on port UART2
CFG-MSGOUT-UBX_NAV_VELNED_USB	0x20910045	U1	-	-	Output rate of the UBX-NAV-VELNED message on port USB
CFG-MSGOUT-UBX_RXM_MEASX_I2C	0x20910204	U1	-	-	Output rate of the UBX-RXM-MEASX message on port I2C
CFG-MSGOUT-UBX_RXM_MEASX_SPI	0x20910208	U1	-	-	Output rate of the UBX-RXM-MEASX message on port SPI
CFG-MSGOUT-UBX_RXM_MEASX_UART1	0x20910205	U1	-	-	Output rate of the UBX-RXM-MEASX message on port UART1
CFG-MSGOUT-UBX_RXM_MEASX_UART2	0x20910206	U1	-	-	Output rate of the UBX-RXM-MEASX message on port UART2
CFG-MSGOUT-UBX_RXM_MEASX_USB	0x20910207	U1	-	-	Output rate of the UBX-RXM-MEASX message on port USB
CFG-MSGOUT-UBX_RXM_RAWX_I2C	0x209102a4	U1	-	-	Output rate of the UBX-RXM-RAWX message on port I2C
CFG-MSGOUT-UBX_RXM_RAWX_SPI	0x209102a8	U1	-	-	Output rate of the UBX-RXM-RAWX message on port SPI
CFG-MSGOUT-UBX_RXM_RAWX_UART1	0x209102a5	U1	-	-	Output rate of the UBX-RXM-RAWX message on port UART1
CFG-MSGOUT-UBX_RXM_RAWX_UART2	0x209102a6	U1	-	-	Output rate of the UBX-RXM-RAWX message on port UART2
CFG-MSGOUT-UBX_RXM_RAWX_USB	0x209102a7	U1	-	-	Output rate of the UBX-RXM-RAWX message on port USB
CFG-MSGOUT-UBX_RXM_RLM_I2C	0x2091025e	U1	-	-	Output rate of the UBX-RXM-RLM message on port I2C
CFG-MSGOUT-UBX_RXM_RLM_SPI	0x20910262	U1	-	-	Output rate of the UBX-RXM-RLM message on port SPI

CONFIDENTIAL

Configuration item	Key ID	Type	Scale	Unit	Description
CFG-MSGOUT-UBX_RXM_RLM_UART1	0x2091025f	U1	-	-	Output rate of the UBX-RXM-RLM message on port UART1
CFG-MSGOUT-UBX_RXM_RLM_UART2	0x20910260	U1	-	-	Output rate of the UBX-RXM-RLM message on port UART2
CFG-MSGOUT-UBX_RXM_RLM_USB	0x20910261	U1	-	-	Output rate of the UBX-RXM-RLM message on port USB
CFG-MSGOUT-UBX_RXM_RTC5_I2C	0x20910155	U1	-	-	Output rate of the UBX-RXM-RTC5 message on port I2C
CFG-MSGOUT-UBX_RXM_RTC5_SPI	0x20910159	U1	-	-	Output rate of the UBX-RXM-RTC5 message on port SPI
CFG-MSGOUT-UBX_RXM_RTC5_UART1	0x20910156	U1	-	-	Output rate of the UBX-RXM-RTC5 message on port UART1
CFG-MSGOUT-UBX_RXM_RTC5_UART2	0x20910157	U1	-	-	Output rate of the UBX-RXM-RTC5 message on port UART2
CFG-MSGOUT-UBX_RXM_RTC5_USB	0x20910158	U1	-	-	Output rate of the UBX-RXM-RTC5 message on port USB
CFG-MSGOUT-UBX_RXM_RTCM_I2C	0x20910268	U1	-	-	Output rate of the UBX-RXM-RTCM message on port I2C
CFG-MSGOUT-UBX_RXM_RTCM_SPI	0x2091026c	U1	-	-	Output rate of the UBX-RXM-RTCM message on port SPI
CFG-MSGOUT-UBX_RXM_RTCM_UART1	0x20910269	U1	-	-	Output rate of the UBX-RXM-RTCM message on port UART1
CFG-MSGOUT-UBX_RXM_RTCM_UART2	0x2091026a	U1	-	-	Output rate of the UBX-RXM-RTCM message on port UART2
CFG-MSGOUT-UBX_RXM_RTCM_USB	0x2091026b	U1	-	-	Output rate of the UBX-RXM-RTCM message on port USB
CFG-MSGOUT-UBX_RXM_SFRBX_I2C	0x20910231	U1	-	-	Output rate of the UBX-RXM-SFRBX message on port I2C
CFG-MSGOUT-UBX_RXM_SFRBX_SPI	0x20910235	U1	-	-	Output rate of the UBX-RXM-SFRBX message on port SPI
CFG-MSGOUT-UBX_RXM_SFRBX_UART1	0x20910232	U1	-	-	Output rate of the UBX-RXM-SFRBX message on port UART1
CFG-MSGOUT-UBX_RXM_SFRBX_UART2	0x20910233	U1	-	-	Output rate of the UBX-RXM-SFRBX message on port UART2
CFG-MSGOUT-UBX_RXM_SFRBX_USB	0x20910234	U1	-	-	Output rate of the UBX-RXM-SFRBX message on port USB
CFG-MSGOUT-UBX_SEC_ECSIGN_I2C	0x2091034a	U1	-	-	Output rate of the UBX-SEC-ECSIGN message on port I2C
CFG-MSGOUT-UBX_SEC_ECSIGN_SPI	0x2091034e	U1	-	-	Output rate of the UBX-SEC-ECSIGN message on port SPI
CFG-MSGOUT-UBX_SEC_ECSIGN_UART1	0x2091034b	U1	-	-	Output rate of the UBX-SEC-ECSIGN message on port UART1
CFG-MSGOUT-UBX_SEC_ECSIGN_UART2	0x2091034c	U1	-	-	Output rate of the UBX-SEC-ECSIGN message on port UART2
CFG-MSGOUT-UBX_SEC_ECSIGN_USB	0x2091034d	U1	-	-	Output rate of the UBX-SEC-ECSIGN message on port USB
CFG-MSGOUT-UBX_TIM_TM2_I2C	0x20910178	U1	-	-	Output rate of the UBX-TIM-TM2 message on port I2C
CFG-MSGOUT-UBX_TIM_TM2_SPI	0x2091017c	U1	-	-	Output rate of the UBX-TIM-TM2 message on port SPI
CFG-MSGOUT-UBX_TIM_TM2_UART1	0x20910179	U1	-	-	Output rate of the UBX-TIM-TM2 message on port UART1

CONFIDENTIAL

Configuration item	Key ID	Type	Scale	Unit	Description
CFG-MSGOUT-UBX_TIM_TM2_UART2	0x2091017a	U1	-	-	Output rate of the UBX-TIM-TM2 message on port UART2
CFG-MSGOUT-UBX_TIM_TM2_USB	0x2091017b	U1	-	-	Output rate of the UBX-TIM-TM2 message on port USB
CFG-MSGOUT-UBX_TIM_TP_I2C	0x2091017d	U1	-	-	Output rate of the UBX-TIM-TP message on port I2C
CFG-MSGOUT-UBX_TIM_TP_SPI	0x20910181	U1	-	-	Output rate of the UBX-TIM-TP message on port SPI
CFG-MSGOUT-UBX_TIM_TP_UART1	0x2091017e	U1	-	-	Output rate of the UBX-TIM-TP message on port UART1
CFG-MSGOUT-UBX_TIM_TP_UART2	0x2091017f	U1	-	-	Output rate of the UBX-TIM-TP message on port UART2
CFG-MSGOUT-UBX_TIM_TP_USB	0x20910180	U1	-	-	Output rate of the UBX-TIM-TP message on port USB
CFG-MSGOUT-UBX_TIM_VRFY_I2C	0x20910092	U1	-	-	Output rate of the UBX-TIM-VRFY message on port I2C
CFG-MSGOUT-UBX_TIM_VRFY_SPI	0x20910096	U1	-	-	Output rate of the UBX-TIM-VRFY message on port SPI
CFG-MSGOUT-UBX_TIM_VRFY_ UART1	0x20910093	U1	-	-	Output rate of the UBX-TIM-VRFY message on port UART1
CFG-MSGOUT-UBX_TIM_VRFY_ UART2	0x20910094	U1	-	-	Output rate of the UBX-TIM-VRFY message on port UART2
CFG-MSGOUT-UBX_TIM_VRFY_USB	0x20910095	U1	-	-	Output rate of the UBX-TIM-VRFY message on port USB

Table 18: CFG-MSGOUT configuration items

4.9.14 CFG-NAVSPG: Standard precision navigation configuration

This group contains configuration items related to the operation of the receiver at standard precision, including configuring postition fix mode, ionospheric model selection and other related items.

Configuration item	Key ID	Type	Scale	Unit	Description
CFG-NAVSPG-FIXMODE	0x20110011	E1	-	-	Position fix mode
See Table 20 below for a list of possible constants for this item.					
CFG-NAVSPG-INIFIX3D	0x10110013	L	-	-	Initial fix must be a 3D fix
CFG-NAVSPG-WKNROLLOVER	0x30110017	U2	-	-	GPS week rollover number
GPS week numbers will be set correctly from this week up to 1024 weeks after this week. Range is from 1 to 4096.					
CFG-NAVSPG-USE_PPP	0x10110019	L	-	-	Use precise point positioning (PPP)
CFG-NAVSPG-UTCSTANDARD	0x2011001c	E1	-	-	UTC standard to be used
See also the section *GNSS time base* in the Integration manual. See Table 21 below for a list of possible constants for this item.					
CFG-NAVSPG-DYNMODEL	0x20110021	E1	-	-	Dynamic platform model
See Table 22 below for a list of possible constants for this item.					
CFG-NAVSPG-ACKAIDING	0x10110025	L	-	-	Acknowledge assistance input messages
CFG-NAVSPG-USE_USRDAT	0x10110061	L	-	-	Use user geodetic datum parameters
This must be set together with all CFG-NAVSPG-USERDAT_* parameters.					
CFG-NAVSPG-USRDAT_MAJA	0x50110062	R8	-	m	Geodetic datum semi-major axis

CONFIDENTIAL

Configuration item	Key ID	Type	Scale	Unit	Description
Accepted range is from 6,300,000.0 to 6,500,000.0 meters This will only be used if CFG-NAVSPG-USE_USERDAT is set. It must be set together with all other CFG-NAVSPG-USERDAT_... parameters.					
CFG-NAVSPG-USRDAT_FLAT	0x50110063	R8	-	-	Geodetic datum 1.0 / flattening
Accepted range is 0.0 to 500.0. This will only be used if CFG-NAVSPG-USE_USERDAT is set. It must be set together with all other CFG-NAVSPG-USERDAT_... parameters.					
CFG-NAVSPG-USRDAT_DX	0x40110064	R4	-	m	Geodetic datum X axis shift at the origin
Accepted range is +/- 5000.0 meters. This will only be used if CFG-NAVSPG-USE_USERDAT is set. It must be set together with all other CFG-NAVSPG-USERDAT_... parameters.					
CFG-NAVSPG-USRDAT_DY	0x40110065	R4	-	m	Geodetic datum Y axis shift at the origin
Accepted range is +/- 5000.0 meters. This will only be used if CFG-NAVSPG-USE_USERDAT is set. It must be set together with all other CFG-NAVSPG-USERDAT_... parameters.					
CFG-NAVSPG-USRDAT_DZ	0x40110066	R4	-	m	Geodetic datum Z axis shift at the origin
Accepted range is +/- 5000.0 meters. This will only be used if CFG-NAVSPG-USE_USERDAT is set. It must be set together with all other CFG-NAVSPG-USERDAT_.. parameters.					
CFG-NAVSPG-USRDAT_ROTX	0x40110067	R4	-	arcsec	Geodetic datum rotation about the X axis
Accepted range is +/- 20.0 milli arc seconds. This will only be used if CFG-NAVSPG-USE_USERDAT is set. It must be set together with all other CFG-NAVSPG-USERDAT_... parameters.					
CFG-NAVSPG-USRDAT_ROTY	0x40110068	R4	-	arcsec	Geodetic datum rotation about the Y axis ()
Accepted range is +/- 20.0 milli-arc seconds. This will only be used if CFG-NAVSPG-USE_USERDAT is set. It must be set together with all other CFG-NAVSPG-USERDAT_* parameters.					
CFG-NAVSPG-USRDAT_ROTZ	0x40110069	R4	-	arcsec	Geodetic datum rotation about the Z axis
Accepted range is +/- 20.0 milli-arc seconds. This will only be used if CFG-NAVSPG-USE_USERDAT is set. It must be set together with all other CFG-NAVSPG-USERDAT_... parameters.					
CFG-NAVSPG-USRDAT_SCALE	0x4011006a	R4	-	ppm	Geodetic datum scale factor
Accepted range is 0.0 to 50.0 parts per million. This will only be used if CFG-NAVSPG-USE_USERDAT is set. It must be set together with all other CFG-NAVSPG-USERDAT_... parameters.					
CFG-NAVSPG-INFIL_MINSVS	0x201100a1	U1	-	-	Minimum number of satellites for navigation
CFG-NAVSPG-INFIL_MAXSVS	0x201100a2	U1	-	-	Maximum number of satellites for navigation
CFG-NAVSPG-INFIL_MINCNO	0x201100a3	U1	-	dBHz	Minimum satellite signal level for navigation
CFG-NAVSPG-INFIL_MINELEV	0x201100a4	I1	-	deg	Minimum elevation for a GNSS satellite to be used in navigation
CFG-NAVSPG-INFIL_NCNOTHRS	0x201100aa	U1	-	-	Number of satellites required to have C/N0 above CFG-NAVSPG-INFIL_CNOTHRS for a fix to be attempted
CFG-NAVSPG-INFIL_CNOTHRS	0x201100ab	U1	-	-	C/N0 threshold for deciding whether to attempt a fix
CFG-NAVSPG-OUTFIL_PDOP	0x301100b1	U2	0.1	-	Output filter position DOP mask (threshold)
CFG-NAVSPG-OUTFIL_TDOP	0x301100b2	U2	0.1	-	Output filter time DOP mask (threshold)
CFG-NAVSPG-OUTFIL_PACC	0x301100b3	U2	-	m	Output filter position accuracy mask (threshold)

CONFIDENTIAL

Configuration item	Key ID	Type	Scale	Unit	Description
CFG-NAVSPG-OUTFIL_TACC	0x301100b4	U2	-	m	Output filter time accuracy mask (threshold)
CFG-NAVSPG-OUTFIL_FACC	0x301100b5	U2	0.01	m/s	Output filter frequency accuracy mask (threshold)
CFG-NAVSPG-CONSTR_ALT	0x401100c1	I4	0.01	m	Fixed altitude (mean sea level) for 2D fix mode
CFG-NAVSPG-CONSTR_ALTVAR	0x401100c2	U4	0.0001	m^2	Fixed altitude variance for 2D mode
CFG-NAVSPG-CONSTR_DGNSSTO	0x201100c4	U1	-	s	DGNSS timeout
CFG-NAVSPG-SIGATTCOMP	0x201100d6	E1	-	-	Permanently attenuated signal compensation mode

See Table 23 below for a list of possible constants for this item.

Table 19: CFG-NAVSPG configuration items

Constant	Value	Description
2DONLY	1	2D only
3DONLY	2	3D only
AUTO	3	Auto 2D/3D

Table 20: Constants for CFG-NAVSPG-FIXMODE

Constant	Value	Description
AUTO	0	Automatic; receiver selects based on GNSS configuration
USNO	3	UTC as operated by the U.S. Naval Observatory (USNO); derived from GPS time
EU	5	UTC as combined from multiple European laboratories; derived from Galileo time
SU	6	UTC as operated by the former Soviet Union (SU); derived from GLONASS time
NTSC	7	UTC as operated by the National Time Service Center (NTSC), China; derived from BeiDou time

Table 21: Constants for CFG-NAVSPG-UTCSTANDARD

Constant	Value	Description
PORT	0	Portable
STAT	2	Stationary
PED	3	Pedestrian
AUTOMOT	4	Automotive
SEA	5	Sea
AIR1	6	Airborne with <1g acceleration
AIR2	7	Airborne with <2g acceleration
AIR4	8	Airborne with <4g acceleration
WRIST	9	Wrist-worn watch (not available in all products)

Table 22: Constants for CFG-NAVSPG-DYNMODEL

Constant	Value	Description
DIS	0	Disable signal attenuation compensation
AUTO	255	Automatic signal attenuation compensation
01DBHZ	1	Maximum expected C/NO level is 1 dBHz
02DBHZ	2	Maximum expected C/NO level is 2 dBHz

CONFIDENTIAL

Constant	Value	Description
03DBHZ	3	Maximum expected C/NO level is 3 dBHz
04DBHZ	4	Maximum expected C/NO level is 4 dBHz
05DBHZ	5	Maximum expected C/NO level is 5 dBHz
06DBHZ	6	Maximum expected C/NO level is 6 dBHz
07DBHZ	7	Maximum expected C/NO level is 7 dBHz
08DBHZ	8	Maximum expected C/NO level is 8 dBHz
09DBHZ	9	Maximum expected C/NO level is 9 dBHz
10DBHZ	10	Maximum expected C/NO level is 10 dBHz
11DBHZ	11	Maximum expected C/NO level is 11 dBHz
12DBHZ	12	Maximum expected C/NO level is 12 dBHz
13DBHZ	13	Maximum expected C/NO level is 13 dBHz
14DBHZ	14	Maximum expected C/NO level is 14 dBHz
15DBHZ	15	Maximum expected C/NO level is 15 dBHz
16DBHZ	16	Maximum expected C/NO level is 16 dBHz
17DBHZ	17	Maximum expected C/NO level is 17 dBHz
18DBHZ	18	Maximum expected C/NO level is 18 dBHz
19DBHZ	19	Maximum expected C/NO level is 19 dBHz
20DBHZ	20	Maximum expected C/NO level is 20 dBHz
21DBHZ	21	Maximum expected C/NO level is 21 dBHz
22DBHZ	22	Maximum expected C/NO level is 22 dBHz
23DBHZ	23	Maximum expected C/NO level is 23 dBHz
24DBHZ	24	Maximum expected C/NO level is 24 dBHz
25DBHZ	25	Maximum expected C/NO level is 25 dBHz
26DBHZ	26	Maximum expected C/NO level is 26 dBHz
27DBHZ	27	Maximum expected C/NO level is 27 dBHz
28DBHZ	28	Maximum expected C/NO level is 28 dBHz
29DBHZ	29	Maximum expected C/NO level is 29 dBHz
30DBHZ	30	Maximum expected C/NO level is 30 dBHz
31DBHZ	31	Maximum expected C/NO level is 31 dBHz
32DBHZ	32	Maximum expected C/NO level is 32 dBHz
33DBHZ	33	Maximum expected C/NO level is 33 dBHz
34DBHZ	34	Maximum expected C/NO level is 34 dBHz
35DBHZ	35	Maximum expected C/NO level is 35 dBHz
36DBHZ	36	Maximum expected C/NO level is 36 dBHz
37DBHZ	37	Maximum expected C/NO level is 37 dBHz
38DBHZ	38	Maximum expected C/NO level is 38 dBHz
39DBHZ	39	Maximum expected C/NO level is 39 dBHz
40DBHZ	40	Maximum expected C/NO level is 40 dBHz
41DBHZ	41	Maximum expected C/NO level is 41 dBHz
42DBHZ	42	Maximum expected C/NO level is 42 dBHz
43DBHZ	43	Maximum expected C/NO level is 43 dBHz

CONFIDENTIAL

Constant	Value	Description
44DBHZ	44	Maximum expected C/NO level is 44 dBHz
45DBHZ	45	Maximum expected C/NO level is 45 dBHz
46DBHZ	46	Maximum expected C/NO level is 46 dBHz
47DBHZ	47	Maximum expected C/NO level is 47 dBHz
48DBHZ	48	Maximum expected C/NO level is 48 dBHz
49DBHZ	49	Maximum expected C/NO level is 49 dBHz
50DBHZ	50	Maximum expected C/NO level is 50 dBHz
51DBHZ	51	Maximum expected C/NO level is 51 dBHz
52DBHZ	52	Maximum expected C/NO level is 52 dBHz
53DBHZ	53	Maximum expected C/NO level is 53 dBHz
54DBHZ	54	Maximum expected C/NO level is 54 dBHz
55DBHZ	55	Maximum expected C/NO level is 55 dBHz
56DBHZ	56	Maximum expected C/NO level is 56 dBHz
57DBHZ	57	Maximum expected C/NO level is 57 dBHz
58DBHZ	58	Maximum expected C/NO level is 58 dBHz
59DBHZ	59	Maximum expected C/NO level is 59 dBHz
60DBHZ	60	Maximum expected C/NO level is 60 dBHz
61DBHZ	61	Maximum expected C/NO level is 61 dBHz
62DBHZ	62	Maximum expected C/NO level is 62 dBHz
63DBHZ	63	Maximum expected C/NO level is 63 dBHz

Table 23: Constants for CFG-NAVSPG-SIGATTCOMP

4.9.15 CFG-NMEA: NMEA protocol configuration

This group configures the NMEA protocol. See section NMEA protocol configuration for a detailed description of the configuration effects on NMEA output.

Configuration item	Key ID	Type	Scale	Unit	Description
CFG-NMEA-PROTVER	0x20930001	E1	-	-	NMEA protocol version
See Table 25 below for a list of possible constants for this item.					
CFG-NMEA-MAXSVS	0x20930002	E1	-	-	Maximum number of SVs to report per Talker ID
See Table 26 below for a list of possible constants for this item.					
CFG-NMEA-COMPAT	0x10930003	L	-	-	Enable compatibility mode
This might be needed for certain applications, e.g. for an NMEA parser that expects a fixed number of digits in position coordinates.					
CFG-NMEA-CONSIDER	0x10930004	L	-	-	Enable considering mode
This will affect NMEA output used satellite count. If set, also considered satellites (e.g. RAIMED) are counted as used satellites as well.					
CFG-NMEA-LIMIT82	0x10930005	L	-	-	Enable strict limit to 82 characters maximum NMEA message length
CFG-NMEA-HIGHPREC	0x10930006	L	-	-	Enable high precision mode
This flag cannot be set in conjunction with either CFG-NMEA-COMPAT or CFG-NMEA-LIMIT82 mode.					
CFG-NMEA-SVNUMBERING	0x20930007	E1	-	-	Display configuration for SVs that do not have value defined in NMEA

CONFIDENTIAL

Configuration item	Key ID	Type	Scale	Unit	Description
Configures the display of satellites that do not have an NMEA-defined value. Note: this does not apply to satellites with an unknown ID. See also Satellite Numbering. See Table 27 below for a list of possible constants for this item.					
CFG-NMEA-FILT_GPS	0x10930011	L	-	-	Disable reporting of GPS satellites
CFG-NMEA-FILT_SBAS	0x10930012	L	-	-	Disable reporting of SBAS satellites
CFG-NMEA-FILT_GAL	0x10930013	L	-	-	Disable reporting of Galileo satellites
CFG-NMEA-FILT_QZSS	0x10930015	L	-	-	Disable reporting of QZSS satellites
CFG-NMEA-FILT_GLO	0x10930016	L	-	-	Disable reporting of GLONASS satellites
CFG-NMEA-FILT_BDS	0x10930017	L	-	-	Disable reporting of BeiDou satellites
CFG-NMEA-OUT_INVFIX	0x10930021	L	-	-	Enable position output for failed or invalid fixes
CFG-NMEA-OUT_MSKFIX	0x10930022	L	-	-	Enable position output for invalid fixes
CFG-NMEA-OUT_INVTIME	0x10930023	L	-	-	Enable time output for invalid times
CFG-NMEA-OUT_INVDATE	0x10930024	L	-	-	Enable date output for invalid dates
CFG-NMEA-OUT_ONLYGPS	0x10930025	L	-	-	Restrict output to GPS satellites only
CFG-NMEA-OUT_FROZENCOG	0x10930026	L	-	-	Enable course over ground output even if it is frozen
CFG-NMEA-MAINTALKERID	0x20930031	E1	-	-	Main Talker ID
By default the main Talker ID (i.e. the Talker ID used for all messages other than GSV) is determined by the GNSS assignment of the receiver's channels (see CFG-SIGNAL). This field enables the main Talker ID to be overridden. See Table 28 below for a list of possible constants for this item.					
CFG-NMEA-GSVTALKERID	0x20930032	E1	-	-	Talker ID for GSV NMEA messages
By default the Talker ID for GSV messages is GNSS-specific (as defined by NMEA). This field enables the GSV Talker ID to be overridden. See Table 29 below for a list of possible constants for this item.					
CFG-NMEA-BDSTALKERID	0x30930033	U2	-	-	BeiDou Talker ID
Sets the two ASCII characters that should be used for the BeiDou Talker ID. If these are set to zero, the default BeiDou Talker ID will be used.					

Table 24: CFG-NMEA configuration items

Constant	Value	Description
V21	21	NMEA protocol version 2.1
V23	23	NMEA protocol version 2.3
V40	40	NMEA protocol version 4.0 (not available in all products)
V41	41	NMEA protocol version 4.10 (not available in all products)
V411	42	NMEA protocol version 4.11 (not available in all products)

Table 25: Constants for CFG-NMEA-PROTVER

Constant	Value	Description
UNLIM	0	Unlimited
8SVS	8	8 SVs
12SVS	12	12 SVs
16SVS	16	16 SVs

Table 26: Constants for CFG-NMEA-MAXSVS

CONFIDENTIAL

Constant	Value	Description
STRICT	0	Strict - satellites are not output
EXTENDED	1	Extended - use proprietary numbering

Table 27: Constants for CFG-NMEA-SVNUMBERING

Constant	Value	Description
AUTO	0	Main Talker ID is not overridden
GP	1	Set main Talker ID to 'GP'
GL	2	Set main Talker ID to 'GL'
GN	3	Set main Talker ID to 'GN'
GA	4	Set main Talker ID to 'GA' (not available in all products)
GB	5	Set main Talker ID to 'GB' (not available in all products)

Table 28: Constants for CFG-NMEA-MAINTALKERID

Constant	Value	Description
GNSS	0	Use GNSS-specific Talker ID (as defined by NMEA)
MAIN	1	Use the main Talker ID

Table 29: Constants for CFG-NMEA-GSVTALKERID

4.9.16 CFG-ODO: Odometer and low-speed course over ground filter configuration

The items in this group allow the user to configure the Odometer feature and Low-Speed Course Over Ground Filter.

Configuration item	Key ID	Type	Scale	Unit	Description
CFG-ODO-USE_ODO	0x10220001	L	-	-	Use odometer
CFG-ODO-USE_COG	0x10220002	L	-	-	Use low-speed course over ground filter
CFG-ODO-OUTLPVEL	0x10220003	L	-	-	Output low-pass filtered velocity
CFG-ODO-OUTLPCOG	0x10220004	L	-	-	Output low-pass filtered course over ground (heading)
CFG-ODO-PROFILE	0x20220005	E1	-	-	Odometer profile configuration See Table 31 below for a list of possible constants for this item.
CFG-ODO-COGMAXSPEED	0x20220021	U1	-	m/s	Upper speed limit for low-speed course over ground filter
CFG-ODO-COGMAXPOSACC	0x20220022	U1	-	-	Maximum acceptable position accuracy for computing low-speed filtered course over ground
CFG-ODO-VELLPGAIN	0x20220031	U1	-	-	Velocity low-pass filter level Range is from 0 to 255.
CFG-ODO-COGLPGAIN	0x20220032	U1	-	-	Course over ground low-pass filter level (at speed < 8 m/s) Range is from 0 to 255.

Table 30: CFG-ODO configuration items

Constant	Value	Description
RUN	0	Running
CYCL	1	Cycling
SWIM	2	Swimming

CONFIDENTIAL

Constant	Value	Description
CAR	3	Car
CUSTOM	4	Custom

Table 31: Constants for CFG-ODO-PROFILE

4.9.17 CFG-PM: Configuration for receiver power management

Use this configuration group to manage the two main receiver power save modes (on/off operation, PSMOO or cyclic tracking operation, PSMCT).

Configuration item	Key ID	Type	Scale	Unit	Description
CFG-PM-OPERATEMODE	0x20d00001	E1	-	-	General mode of operation.
Setting this to either PSMOO or PSMCT will turn the corresponding mode on. Setting this to FULL will turn any PSM off. See Integration manual for details. See Table 33 below for a list of possible constants for this item.					
CFG-PM-POSUPDATEPERIOD	0x40d00002	U4	-	s	Position update period for PSMOO.
Allowed range: >= 5 s and smaller than the number of seconds in a week. If set to 0, the receiver will never retry a fix and will wait for external events.					
CFG-PM-ACQPERIOD	0x40d00003	U4	-	s	Acquisition period used if the receiver previously failed to achieve a position fix.
If set to 0, the receiver will never retry an acquisition and will wait for external events.					
CFG-PM-GRIDOFFSET	0x40d00004	U4	-	s	Position update period grid offset relative to GPS start of week.
If set to 0, the position update periods are aligned to the GPS week.					
CFG-PM-ONTIME	0x30d00005	U2	-	s	Time to stay in Tracking state.
If set to 0, the receiver will only very briefly enter tracking state (after acquisition) and then go back to inactive.					
CFG-PM-MINACQTIME	0x20d00006	U1	-	s	Minimum time to spend in Acquisition state
CFG-PM-MAXACQTIME	0x20d00007	U1	-	s	Maximum time to spend in Acquisition state
If 0: bound disabled (see maxStartupStateDur).					
CFG-PM-DONOTENTEROFF	0x10d00008	L	-	-	Behavior of receiver in case it cannot achieve a position fix during a position update period.
Disable to make the receiver enter (Inactive) Awaiting next search state, enable to make the receiver not enter (Inactive) Awaiting next search state but keep trying to acquire a fix instead.					
CFG-PM-WAITTIMEFIX	0x10d00009	L	-	-	Wait for time fix
Disable to wait for normal fix OK before starting ONTIME, enable to wait for time fix OK before starting ONTIME.					
CFG-PM-UPDATEEPH	0x10d0000a	L	-	-	Update ephemeris regularly.
Disable to not wake up to update ephemeris data, enable adds extra wake-up cycles to update the ephemeris data.					
CFG-PM-EXTINTSEL	0x20d0000b	E1	-	-	EXTINT pin select
See Table 34 below for a list of possible constants for this item.					
CFG-PM-EXTINTWAKE	0x10d0000c	L	-	-	EXTINT pin control (Wake)
Enable to keep receiver awake as long as selected EXTINT pin is "high".					
CFG-PM-EXTINTBACKUP	0x10d0000d	L	-	-	EXTINT pin control (Backup)
Enable to force receiver into BACKUP mode when selected EXTINT pin is "low".					
CFG-PM-EXTINTINACTIVE	0x10d0000e	L	-	-	EXTINT pin control (Inactive)
Enable to force backup in case EXTINT pin is inactive for time longer than CFG-PM-EXTINTINACTIVITY.					
CFG-PM-EXTINTINACTIVITY	0x40d0000f	U4	0.001	s	Inactivity time out on EXTINT pin if enabled
CFG-PM-LIMITPEAKCURR	0x10d00010	L	-	-	Limit peak current

Table 32: CFG-PM configuration items

CONFIDENTIAL

Constant	Value	Description
FULL	0	normal operation, no power save mode active
PSMOO	1	PSM ON/OFF operation
PSMCT	2	PSM cyclic tracking operation

Table 33: Constants for CFG-PM-OPERATEMODE

Constant	Value	Description
EXTINT0	0	EXTINT0 Pin
EXTINT1	1	EXTINT1 Pin

Table 34: Constants for CFG-PM-EXTINTSEL

4.9.18 CFG-QZSS: QZSS system configuration

Note that enabling and disabling of individual GNSS is done via the CFG-SIGNAL configuration group.

Configuration item	Key ID	Type	Scale	Unit	Description
CFG-QZSS-USE_SLAS_DGNSS	0x10370005	L	-	-	Apply QZSS SLAS DGNSS corrections
CFG-QZSS-USE_SLAS_TESTMODE	0x10370006	L	-	-	Use QZSS SLAS data when it is in test mode (SLAS msg 0)
CFG-QZSS-USE_SLAS_RAIM_UNCORR	0x10370007	L	-	-	Raim out measurements that are not corrected by QZSS SLAS, if at least 5 measurements are corrected

Table 35: CFG-QZSS configuration items

4.9.19 CFG-RATE: Navigation and measurement rate configuration

The configuration items in this group allow the user to alter the rate at which navigation solutions (and the measurements that they depend on) are generated by the receiver. The calculation of the navigation solution will always be aligned to the top of a second zero (first second of the week) of the configured reference time system. The navigation period is an integer multiple of the measurement period.

Configuration item	Key ID	Type	Scale	Unit	Description
CFG-RATE-MEAS	0x30210001	U2	0.001	s	Nominal time between GNSS measurements
E.g. 100 ms results in 10 Hz measurement rate, 1000 ms = 1 Hz measurement rate.					
CFG-RATE-NAV	0x30210002	U2	-	-	Ratio of number of measurements to number of navigation solutions
E.g. 5 means five measurements for every navigation solution. The maximum value is 128.					
CFG-RATE-TIMEREF	0x20210003	E1	-	-	Time system to which measurements are aligned
See Table 37 below for a list of possible constants for this item.					

Table 36: CFG-RATE configuration items

Constant	Value	Description
UTC	0	Align measurements to UTC time
GPS	1	Align measurements to GPS time
GLO	2	Align measurements to GLONASS time
BDS	3	Align measurements to BeiDou time

CONFIDENTIAL

Constant	Value	Description
GAL	4	Align measurements to Galileo time

Table 37: Constants for CFG-RATE-TIMEREF

4.9.20 CFG-RINV: Remote inventory

The Remote Inventory enables storing user-defined data in the non-volatile memory of the receiver. The data can be either binary or a string of ASCII characters. In the latter case, it can optionally be output at startup after the boot screen.

Configuration item	Key ID	Type	Scale	Unit	Description
CFG-RINV-DUMP	0x10c70001	L	-	-	Dump data at startup
When true, data will be dumped to the interface on startup, unless CFG-RINV-BINARY is set.					
CFG-RINV-BINARY	0x10c70002	L	-	-	Data is binary
When true, the data is treated as binary data.					
CFG-RINV-DATA_SIZE	0x20c70003	U1	-	-	Size of data
Size of data to store/be stored in the Remote Inventory (maximum 30 bytes).					
CFG-RINV-CHUNK0	0x50c70004	X8	-	-	Data bytes 1-8 (LSB)
Data to store/be stored in Remote Inventory - max 8 bytes, left-most in LSB, e.g. string ABCD will appear as 0x44434241.					
CFG-RINV-CHUNK1	0x50c70005	X8	-	-	Data bytes 9-16
Data to store/be stored in Remote Inventory - max 8 bytes, left-most in LSB, e.g. string ABCD will appear as 0x44434241.					
CFG-RINV-CHUNK2	0x50c70006	X8	-	-	Data bytes 17-24
Data to store/be stored in Remote Inventory - max 8 bytes, left-most in LSB, e.g. string ABCD will appear as 0x44434241.					
CFG-RINV-CHUNK3	0x50c70007	X8	-	-	Data bytes 25-30 (MSB)
Data to store/be stored in Remote Inventory - max 6 bytes, left-most in LSB, e.g. string ABCD will appear as 0x44434241.					

Table 38: CFG-RINV configuration items

4.9.21 CFG-SBAS: SBAS configuration

This group configures the SBAS receiver subsystem (i.e. WAAS, EGNOS, MSAS). See the *SBAS configuration settings description* in the Integration manual for a detailed description of how these settings affect receiver operation.

Configuration item	Key ID	Type	Scale	Unit	Description
CFG-SBAS-USE_TESTMODE	0x10360002	L	-	-	Use SBAS data when it is in test mode (SBAS msg 0)
CFG-SBAS-USE_RANGING	0x10360003	L	-	-	Use SBAS GEOs as a ranging source (for navigation)
CFG-SBAS-USE_DIFFCORR	0x10360004	L	-	-	Use SBAS differential corrections
CFG-SBAS-USE_INTEGRITY	0x10360005	L	-	-	Use SBAS integrity information
CFG-SBAS-PRNSCANMASK	0x50360006	X8	-	-	SBAS PRN search configuration
This configuration item determines which SBAS PRNs should be searched. Setting it to 0 indicates auto-scanning all SBAS PRNs. For non-zero values the bits correspond to the allocated SBAS PRNs ranging from PRN120 (bit 0) to PRN158 (bit 38), where a bit set enables searching for the corresponding PRN. See Table 40 below for a list of possible constants for this item.					

Table 39: CFG-SBAS configuration items

Constant	Value	Description
ALL	0x0000000000000000	Enable search for all SBAS PRNs
PRN120	0x0000000000000001	Enable search for SBAS PRN120

CONFIDENTIAL

Constant	Value	Description
PRN121	0x0000000000000002	Enable search for SBAS PRN121
PRN122	0x0000000000000004	Enable search for SBAS PRN122
PRN123	0x0000000000000008	Enable search for SBAS PRN123
PRN124	0x0000000000000010	Enable search for SBAS PRN124
PRN125	0x0000000000000020	Enable search for SBAS PRN125
PRN126	0x0000000000000040	Enable search for SBAS PRN126
PRN127	0x0000000000000080	Enable search for SBAS PRN127
PRN128	0x0000000000000100	Enable search for SBAS PRN128
PRN129	0x0000000000000200	Enable search for SBAS PRN129
PRN130	0x0000000000000400	Enable search for SBAS PRN130
PRN131	0x0000000000000800	Enable search for SBAS PRN131
PRN132	0x0000000000001000	Enable search for SBAS PRN132
PRN133	0x0000000000002000	Enable search for SBAS PRN133
PRN134	0x0000000000004000	Enable search for SBAS PRN134
PRN135	0x0000000000008000	Enable search for SBAS PRN135
PRN136	0x0000000000010000	Enable search for SBAS PRN136
PRN137	0x0000000000020000	Enable search for SBAS PRN137
PRN138	0x0000000000040000	Enable search for SBAS PRN138
PRN139	0x0000000000080000	Enable search for SBAS PRN139
PRN140	0x0000000000100000	Enable search for SBAS PRN140
PRN141	0x0000000000200000	Enable search for SBAS PRN141
PRN142	0x0000000000400000	Enable search for SBAS PRN142
PRN143	0x0000000000800000	Enable search for SBAS PRN143
PRN144	0x0000000001000000	Enable search for SBAS PRN144
PRN145	0x0000000002000000	Enable search for SBAS PRN145
PRN146	0x0000000004000000	Enable search for SBAS PRN146
PRN147	0x0000000008000000	Enable search for SBAS PRN147
PRN148	0x0000000010000000	Enable search for SBAS PRN148
PRN149	0x0000000020000000	Enable search for SBAS PRN149
PRN150	0x0000000040000000	Enable search for SBAS PRN150
PRN151	0x0000000080000000	Enable search for SBAS PRN151
PRN152	0x0000000100000000	Enable search for SBAS PRN152
PRN153	0x0000000200000000	Enable search for SBAS PRN153
PRN154	0x0000000400000000	Enable search for SBAS PRN154
PRN155	0x0000000800000000	Enable search for SBAS PRN155
PRN156	0x0000001000000000	Enable search for SBAS PRN156
PRN157	0x0000002000000000	Enable search for SBAS PRN157

CONFIDENTIAL

Constant	Value	Description
PRN158	0x0000004000000000	Enable search for SBAS PRN158

Table 40: Constants for CFG-SBAS-PRNSCANMASK

4.9.22 CFG-SEC: Security configuration

Security configuration.

Configuration item	Key ID	Type	Scale	Unit	Description
CFG-SEC-ECCFGSESSIONID0	0x50f60006	U8	-	-	ECSIGN configuration session id part 0
ECSIGN configuration session id part 0 (least significant part)					
CFG-SEC-ECCFGSESSIONID1	0x50f60007	U8	-	-	ECSIGN configuration session id part 1
ECSIGN configuration session id part 1					
CFG-SEC-ECCFGSESSIONID2	0x50f60008	U8	-	-	ECSIGN configuration session id part 2
ECSIGN configuration session id part 2 (most significant part)					

Table 41: CFG-SEC configuration items

4.9.23 CFG-SIGNAL: Satellite systems (GNSS) signal configuration

The enable items for individual signals are governed by their corresponding constellation enable item. It is necessary that at least one signal from a major GNSS constellation is enabled. See *GNSS signal configuration* in the Integration manual for more details.

Configuration specific to a GNSS system is available in other groups (e.g. CFG-SBAS).

Note that changes to any items within this group will trigger a reset to the GNSS subsystem.

Configuration item	Key ID	Type	Scale	Unit	Description
CFG-SIGNAL-GPS_ENA	0x1031001f	L	-	-	GPS enable
CFG-SIGNAL-GPS_L1CA_ENA	0x10310001	L	-	-	GPS L1C/A
CFG-SIGNAL-SBAS_ENA	0x10310020	L	-	-	SBAS enable
CFG-SIGNAL-SBAS_L1CA_ENA	0x10310005	L	-	-	SBAS L1C/A
CFG-SIGNAL-GAL_ENA	0x10310021	L	-	-	Galileo enable
CFG-SIGNAL-GAL_E1_ENA	0x10310007	L	-	-	Galileo E1
CFG-SIGNAL-BDS_ENA	0x10310022	L	-	-	BeiDou Enable
CFG-SIGNAL-BDS_B1_ENA	0x1031000d	L	-	-	BeiDou B1I
CFG-SIGNAL-QZSS_ENA	0x10310024	L	-	-	QZSS enable
CFG-SIGNAL-QZSS_L1CA_ENA	0x10310012	L	-	-	QZSS L1C/A
CFG-SIGNAL-GLO_ENA	0x10310025	L	-	-	GLONASS enable
CFG-SIGNAL-GLO_L1_ENA	0x10310018	L	-	-	GLONASS L1

Table 42: CFG-SIGNAL configuration items

4.9.24 CFG-SPI: Configuration of the SPI interface

Settings needed to configure the SPI communication interface.

Configuration item	Key ID	Type	Scale	Unit	Description
CFG-SPI-MAXFF	0x20640001	U1	-	-	Number of bytes containing 0xFF to receive before switching off reception. Range: 0 (mechanism off) - 63

CONFIDENTIAL

Configuration item	Key ID	Type	Scale	Unit	Description
CFG-SPI-CPOLARITY	0x10640002	L	-	-	Clock polarity select: 0: Active Hight Clock, SCLK idles low, 1: Active Low Clock, SCLK idles high
CFG-SPI-CPHASE	0x10640003	L	-	-	Clock phase select: 0: Data captured on first edge of SCLK, 1: Data captured on second edge of SCLK
CFG-SPI-EXTENDEDTIMEOUT	0x10640005	L	-	-	Flag to disable timeouting the interface after 1.5s
CFG-SPI-ENABLED	0x10640006	L	-	-	Flag to indicate if the SPI interface should be enabled

Table 43: CFG-SPI configuration items

4.9.25 CFG-SPIINPROT: Input protocol configuration of the SPI interface

Input protocol enable flags of the SPI interface.

Configuration item	Key ID	Type	Scale	Unit	Description
CFG-SPIINPROT-UBX	0x10790001	L	-	-	Flag to indicate if UBX should be an input protocol on SPI
CFG-SPIINPROT-NMEA	0x10790002	L	-	-	Flag to indicate if NMEA should be an input protocol on SPI
CFG-SPIINPROT-RTCM3X	0x10790004	L	-	-	Flag to indicate if RTCM3X should be an input protocol on SPI

Table 44: CFG-SPIINPROT configuration items

4.9.26 CFG-SPIOUTPROT: Output protocol configuration of the SPI interface

Output protocol enable flags of the SPI interface.

Configuration item	Key ID	Type	Scale	Unit	Description
CFG-SPIOUTPROT-UBX	0x107a0001	L	-	-	Flag to indicate if UBX should be an output protocol on SPI
CFG-SPIOUTPROT-NMEA	0x107a0002	L	-	-	Flag to indicate if NMEA should be an output protocol on SPI

Table 45: CFG-SPIOUTPROT configuration items

4.9.27 CFG-TP: Timepulse configuration

Use this group to configure the generation of timepulses.

Configuration item	Key ID	Type	Scale	Unit	Description
CFG-TP-PULSE_DEF	0x20050023	E1	-	-	Determines whether the time pulse is interpreted as frequency or period
See Table 47 below for a list of possible constants for this item.					
CFG-TP-PULSE_LENGTH_DEF	0x20050030	E1	-	-	Determines whether the time pulse length is interpreted as length[us] or pulse ratio[%]
See Table 48 below for a list of possible constants for this item.					
CFG-TP-ANT_CABLEDELAY	0x30050001	I2	0.000000001	s	Antenna cable delay
CFG-TP-PERIOD_TP1	0x40050002	U4	0.000001	s	Time pulse period (TP1)
CFG-TP-PERIOD_LOCK_TP1	0x40050003	U4	0.000001	s	Time pulse period when locked to GNSS time (TP1)
Only used if CFG-TP-USE_LOCKED_TP1 is set.					
CFG-TP-FREQ_TP1	0x40050024	U4	-	Hz	Time pulse frequency (TP1)
This will only be used if CFG-TP-PULSE_DEF=FREQ.					

CONFIDENTIAL

Configuration item	Key ID	Type	Scale	Unit	Description
CFG-TP-FREQ_LOCK_TP1	0x40050025	U4	-	Hz	Time pulse frequency when locked to GNSS time (TP1) Only used if CFG-TP-USE_LOCKED_TP1 is set.
CFG-TP-LEN_TP1	0x40050004	U4	0.000001	s	Time pulse length (TP1)
CFG-TP-LEN_LOCK_TP1	0x40050005	U4	0.000001	s	Time pulse length when locked to GNSS time (TP1) Only used if CFG-TP-USE_LOCKED_TP1 is set.
CFG-TP-DUTY_TP1	0x5005002a	R8	-	%	Time pulse duty cycle (TP1) Only used if CFG-TP-PULSE_LENGTH_DEF=RATIO is set.
CFG-TP-DUTY_LOCK_TP1	0x5005002b	R8	-	%	Time pulse duty cycle when locked to GNSS time (TP1) Only used if CFG-TP-PULSE_LENGTH_DEF=RATIO and CFG-TP-USE_LOCKED_TP1 are set.
CFG-TP-USER_DELAY_TP1	0x40050006	I4	0.000000001	s	User-configurable time pulse delay (TP1)
CFG-TP-TP1_ENA	0x10050007	L	-	-	Enable the first timepulse if pin associated with time pulse is assigned for another function, the other function takes precedence. Must be set for frequency-time products.
CFG-TP-SYNC_GNSS_TP1	0x10050008	L	-	-	Sync time pulse to GNSS time or local clock (TP1) If set, sync to GNSS if GNSS time is valid otherwise, if not set or not available, use local clock. Ignored by time-frequency product variants, which will attempt to use the best available time/frequency reference (not necessarily GNSS). This flag can be unset only in Timing product variants.
CFG-TP-USE_LOCKED_TP1	0x10050009	L	-	-	Use locked parameters when possible (TP1) If set, use CFG-TP-PERIOD_LOCK_TP1 and CFG-TP-LEN_LOCK_TP1 as soon as GNSS time is valid. Otherwise if not valid or not set, use CFG-TP-PERIOD_TP1 and CFG-TP-LEN_TP1.
CFG-TP-ALIGN_TO_TOW_TP1	0x1005000a	L	-	-	Align time pulse to top of second (TP1) To use this feature, CFG-TP-USE_LOCKED_TP1 must be set. Time pulse period must be an integer fraction of 1 second. Ignored in time-frequency product variants, where it is assumed always enabled.
CFG-TP-POL_TP1	0x1005000b	L	-	-	Set time pulse polarity (TP1) false (0) : falling edge at top of second. true (1) : rising edge at top of second.
CFG-TP-TIMEGRID_TP1	0x2005000c	E1	-	-	Time grid to use (TP1) Only relevant if CFG-TP-USE_LOCKED_TP1 and ALIGN_TO_TOW_TP1 are set. Note that configured GNSS time is estimated by the receiver if locked to any GNSS system. If the receiver has a valid GNSS fix it will attempt to steer the TP to the specified time grid even if the specified time is not based on information from the constellation's satellites. To ensure timing based purely on a given GNSS, restrict the supported constellations in CFG-SIGNAL-*. See Table 49 below for a list of possible constants for this item.
CFG-TP-PERIOD_TP2	0x4005000d	U4	0.000001	s	Time pulse period (TP2)
CFG-TP-PERIOD_LOCK_TP2	0x4005000e	U4	0.000001	s	Time pulse period when locked to GNSS time (TP2) Only used if CFG-TP-USE_LOCKED_TP2 is set.
CFG-TP-FREQ_TP2	0x40050026	U4	-	Hz	Time pulse frequency (TP2) Only used if CFG-TP-PULSE_DEF=FREQ.
CFG-TP-FREQ_LOCK_TP2	0x40050027	U4	-	Hz	Time pulse frequency when locked to GNSS time (TP2) Only used if CFG-TP-USE_LOCKED_TP2 is set.

CONFIDENTIAL

Configuration item	Key ID	Type	Scale	Unit	Description
CFG-TP-LEN_TP2	0x4005000f	U4	0.000001	s	Time pulse length (TP2)
CFG-TP-LEN_LOCK_TP2	0x40050010	U4	0.000001	s	Time pulse length when locked to GNSS time (TP2) Only used if CFG-TP-USE_LOCKED_TP2 is set.
CFG-TP-DUTY_TP2	0x5005002c	R8	-	%	Time pulse duty cycle (TP2) Only used if CFG-TP-PULSE_LENGTH_DEF=RATIO is set.
CFG-TP-DUTY_LOCK_TP2	0x5005002d	R8	-	%	Time pulse duty cycle when locked to GNSS time (TP2) Only used if CFG-TP-PULSE_LENGTH_DEF=RATIO and CFG-TP-USE_LOCKED_TP2 are set.
CFG-TP-USER_DELAY_TP2	0x40050011	I4	0.000000001	s	User-configurable time pulse delay (TP2)
CFG-TP-TP2_ENA	0x10050012	L	-	-	Enable the second timepulse
CFG-TP-SYNC_GNSS_TP2	0x10050013	L	-	-	Sync time pulse to GNSS time or local clock (TP2) If set, sync to GNSS if GNSS time is valid otherwise, if not set or not available, use local clock. Ignored by time-frequency product variants, which will attempt to use the best available time/frequency reference (not necessarily GNSS). This flag can be unset only in Timing product variants.
CFG-TP-USE_LOCKED_TP2	0x10050014	L	-	-	Use locked parameters when possible (TP2) If set, use CFG-TP-PERIOD_LOCK_TP2 and CFG-TP-LEN_LOCK_TP2 as soon as GNSS time is valid. Otherwise if not valid or not set, use CFG-TP-PERIOD_TP2 and CFG-TP-LEN_TP2.
CFG-TP-ALIGN_TO_TOW_TP2	0x10050015	L	-	-	Align time pulse to top of second (TP2) To use this feature, CFG-TP-USE_LOCKED_TP2 must be set. Time pulse period must be an integer fraction of 1 second. Ignored in time-frequency product variants, where it is assumed always enabled. Set maxSlewRate and maxPhaseCorrRate fields of UBX-CFG-SMGR to 0 to disable alignment.
CFG-TP-POL_TP2	0x10050016	L	-	-	Set time pulse polarity (TP2) false (0) : falling edge at top of second. true (1) : rising edge at top of second.
CFG-TP-TIMEGRID_TP2	0x20050017	E1	-	-	Time grid to use (TP2) Only relevant if CFG-TP-USE_LOCKED_TP1 and ALIGN_TO_TOW_TP1 are set. Note that configured GNSS time is estimated by the receiver if locked to any GNSS system. If the receiver has a valid GNSS fix it will attempt to steer the TP to the specified time grid even if the specified time is not based on information from the constellation's satellites. To ensure timing based purely on a given GNSS, restrict the supported constellations in CFG-SIGNAL-*. See Table 50 below for a list of possible constants for this item.

Table 46: CFG-TP configuration items

Constant	Value	Description
PERIOD	0	Time pulse period [us]
FREQ	1	Time pulse frequency [Hz]

Table 47: Constants for CFG-TP-PULSE_DEF

Constant	Value	Description
RATIO	0	Time pulse ratio
LENGTH	1	Time pulse length

Table 48: Constants for CFG-TP-PULSE_LENGTH_DEF

CONFIDENTIAL

Constant	Value	Description
UTC	0	UTC time reference
GPS	1	GPS time reference
GLO	2	GLONASS time reference
BDS	3	BeiDou time reference
GAL	4	Galileo time reference

Table 49: Constants for CFG-TP-TIMEGRID_TP1

Constant	Value	Description
UTC	0	UTC time reference
GPS	1	GPS time reference
GLO	2	GLONASS time reference
BDS	3	BeiDou time reference
GAL	4	Galileo time reference

Table 50: Constants for CFG-TP-TIMEGRID_TP2

4.9.28 CFG-TXREADY: TX ready configuration

Configuration of the TX ready pin.

Configuration item	Key ID	Type	Scale	Unit	Description
CFG-TXREADY-ENABLED	0x10a20001	L	-	-	Flag to indicate if TX ready pin mechanism should be enabled
CFG-TXREADY-POLARITY	0x10a20002	L	-	-	The polarity of the TX ready pin: false:high-active, true:low-active
CFG-TXREADY-PIN	0x20a20003	U1	-	-	Pin number to use for the TX ready functionality
CFG-TXREADY-THRESHOLD	0x30a20004	U2	-	-	Amount of data that should be ready on the interface before triggering the TX ready pin
CFG-TXREADY-INTERFACE	0x20a20005	E1	-	-	Interface where the TX ready feature should be linked to
See Table 52 below for a list of possible constants for this item.					

Table 51: CFG-TXREADY configuration items

Constant	Value	Description
I2C	0	I2C interface
SPI	1	SPI interface

Table 52: Constants for CFG-TXREADY-INTERFACE

4.9.29 CFG-UART1: Configuration of the UART1 interface

Settings needed to configure the UART1 communication interface.

Configuration item	Key ID	Type	Scale	Unit	Description
CFG-UART1-BAUDRATE	0x40520001	U4	-	-	The baud rate that should be configured on the UART1
CFG-UART1-STOPBITS	0x20520002	E1	-	-	Number of stopbits that should be used on UART1
See Table 54 below for a list of possible constants for this item.					
CFG-UART1-DATABITS	0x20520003	E1	-	-	Number of databits that should be used on UART1
See Table 55 below for a list of possible constants for this item.					

CONFIDENTIAL

Configuration item	Key ID	Type	Scale	Unit	Description
CFG-UART1-PARITY	0x20520004	E1	-	-	Parity mode that should be used on UART1 See Table 56 below for a list of possible constants for this item.
CFG-UART1-ENABLED	0x10520005	L	-	-	Flag to indicate if the UART1 should be enabled
CFG-UART1-REMAP	0x10520006	L	-	-	UART1 Remapping

Table 53: CFG-UART1 configuration items

Constant	Value	Description
HALF	0	0.5 stopbits
ONE	1	1.0 stopbits
ONEHALF	2	1.5 stopbits
TWO	3	2.0 stopbits

Table 54: Constants for CFG-UART1-STOPBITS

Constant	Value	Description
EIGHT	0	8 databits
SEVEN	1	7 databits

Table 55: Constants for CFG-UART1-DATABITS

Constant	Value	Description
NONE	0	No parity bit
ODD	1	Add an odd parity bit
EVEN	2	Add an even parity bit

Table 56: Constants for CFG-UART1-PARITY

4.9.30 CFG-UART1INPROT: Input protocol configuration of the UART1 interface

Input protocol enable flags of the UART1 interface.

Configuration item	Key ID	Type	Scale	Unit	Description
CFG-UART1INPROT-UBX	0x10730001	L	-	-	Flag to indicate if UBX should be an input protocol on UART1
CFG-UART1INPROT-NMEA	0x10730002	L	-	-	Flag to indicate if NMEA should be an input protocol on UART1
CFG-UART1INPROT-RTCM3X	0x10730004	L	-	-	Flag to indicate if RTCM3X should be an input protocol on UART1

Table 57: CFG-UART1INPROT configuration items

4.9.31 CFG-UART1OUTPROT: Output protocol configuration of the UART1 interface

Output protocol enable flags of the UART1 interface.

Configuration item	Key ID	Type	Scale	Unit	Description
CFG-UART1OUTPROT-UBX	0x10740001	L	-	-	Flag to indicate if UBX should be an output protocol on UART1

CONFIDENTIAL

Configuration item	Key ID	Type	Scale	Unit	Description
CFG-UART1OUTPROT-NMEA	0x10740002	L	-	-	Flag to indicate if NMEA should be an output protocol on UART1

Table 58: CFG-UART1OUTPROT configuration items

4.9.32 CFG-UART2: Configuration of the UART2 interface

Settings needed to configure the UART2 communication interface.

Configuration item	Key ID	Type	Scale	Unit	Description
CFG-UART2-BAUDRATE	0x40530001	U4	-	-	The baud rate that should be configured on the UART2
CFG-UART2-STOPBITS	0x20530002	E1	-	-	Number of stopbits that should be used on UART2 See Table 60 below for a list of possible constants for this item.
CFG-UART2-DATABITS	0x20530003	E1	-	-	Number of databits that should be used on UART2 See Table 61 below for a list of possible constants for this item.
CFG-UART2-PARITY	0x20530004	E1	-	-	Parity mode that should be used on UART2 See Table 62 below for a list of possible constants for this item.
CFG-UART2-ENABLED	0x10530005	L	-	-	Flag to indicate if the UART2 should be enabled
CFG-UART2-REMAP	0x10530006	L	-	-	UART2 Remapping

Table 59: CFG-UART2 configuration items

Constant	Value	Description
HALF	0	0.5 stopbits
ONE	1	1.0 stopbits
ONEHALF	2	1.5 stopbits
TWO	3	2.0 stopbits

Table 60: Constants for CFG-UART2-STOPBITS

Constant	Value	Description
EIGHT	0	8 databits
SEVEN	1	7 databits

Table 61: Constants for CFG-UART2-DATABITS

Constant	Value	Description
NONE	0	No parity bit
ODD	1	Add an odd parity bit
EVEN	2	Add an even parity bit

Table 62: Constants for CFG-UART2-PARITY

4.9.33 CFG-UART2INPROT: Input protocol configuration of the UART2 interface

Input protocol enable flags of the UART2 interface.

Configuration item	Key ID	Type	Scale	Unit	Description
CFG-UART2INPROT-UBX	0x10750001	L	-	-	Flag to indicate if UBX should be an input protocol on UART2
CFG-UART2INPROT-NMEA	0x10750002	L	-	-	Flag to indicate if NMEA should be an input protocol on UART2

CONFIDENTIAL

Configuration item	Key ID	Type	Scale	Unit	Description
CFG-UART2INPROT-RTCM3X	0x10750004	L	-	-	Flag to indicate if RTCM3X should be an input protocol on UART2

Table 63: CFG-UART2INPROT configuration items

4.9.34 CFG-UART2OUTPROT: Output protocol configuration of the UART2 interface

Output protocol enable flags of the UART2 interface.

Configuration item	Key ID	Type	Scale	Unit	Description
CFG-UART2OUTPROT-UBX	0x10760001	L	-	-	Flag to indicate if UBX should be an output protocol on UART2
CFG-UART2OUTPROT-NMEA	0x10760002	L	-	-	Flag to indicate if NMEA should be an output protocol on UART2

Table 64: CFG-UART2OUTPROT configuration items

4.9.35 CFG-USB: Configuration of the USB interface

Settings needed to configure the USB communication interface.

Configuration item	Key ID	Type	Scale	Unit	Description
CFG-USB-ENABLED	0x10650001	L	-	-	Flag to indicate if the USB interface should be enabled
CFG-USB-SELFPOW	0x10650002	L	-	-	Self-Powered device
CFG-USB-VENDOR_ID	0x3065000a	U2	-	-	Vendor ID
CFG-USB-PRODUCT_ID	0x3065000b	U2	-	-	Vendor ID
CFG-USB-POWER	0x3065000c	U2	-	mA	Power consumption
CFG-USB-VENDOR_STR0	0x5065000d	X8	-	-	Vendor string characters 0-7
CFG-USB-VENDOR_STR1	0x5065000e	X8	-	-	Vendor string characters 8-15
CFG-USB-VENDOR_STR2	0x5065000f	X8	-	-	Vendor string characters 16-23
CFG-USB-VENDOR_STR3	0x50650010	X8	-	-	Vendor string characters 24-31
CFG-USB-PRODUCT_STR0	0x50650011	X8	-	-	Product string characters 0-7
CFG-USB-PRODUCT_STR1	0x50650012	X8	-	-	Product string characters 8-15
CFG-USB-PRODUCT_STR2	0x50650013	X8	-	-	Product string characters 16-23
CFG-USB-PRODUCT_STR3	0x50650014	X8	-	-	Product string characters 24-31
CFG-USB-SERIAL_NO_STR0	0x50650015	X8	-	-	Serial number string characters 0-7
CFG-USB-SERIAL_NO_STR1	0x50650016	X8	-	-	Serial number string characters 8-15
CFG-USB-SERIAL_NO_STR2	0x50650017	X8	-	-	Serial number string characters 16-23
CFG-USB-SERIAL_NO_STR3	0x50650018	X8	-	-	Serial number string characters 24-31

Table 65: CFG-USB configuration items

4.9.36 CFG-USBINPROT: Input protocol configuration of the USB interface

Input protocol enable flags of the USB interface.

Configuration item	Key ID	Type	Scale	Unit	Description
CFG-USBINPROT-UBX	0x10770001	L	-	-	Flag to indicate if UBX should be an input protocol on USB
CFG-USBINPROT-NMEA	0x10770002	L	-	-	Flag to indicate if NMEA should be an input protocol on USB

CONFIDENTIAL

Configuration item	Key ID	Type	Scale	Unit	Description
CFG-USBINPROT-RTCM3X	0x10770004	L	-	-	Flag to indicate if RTCM3X should be an input protocol on USB

Table 66: CFG-USBINPROT configuration items

4.9.37 CFG-USBOUTPROT: Output protocol configuration of the USB interface

Output protocol enable flags of the USB interface.

Configuration item	Key ID	Type	Scale	Unit	Description
CFG-USBOUTPROT-UBX	0x10780001	L	-	-	Flag to indicate if UBX should be an output protocol on USB
CFG-USBOUTPROT-NMEA	0x10780002	L	-	-	Flag to indicate if NMEA should be an output protocol on USB

Table 67: CFG-USBOUTPROT configuration items

4.10 Legacy UBX message fields reference

The following table lists the legacy UBX message fields and the corresponding Configuration Item. Note that the mapping from UBX-CFG message fields to Configuration Items is not necessarily 1:1 and that that some legacy UBX-CFG messages may not be available for certain products.

UBX message and field	Configuration item(s)
UBX-CFG-ANT	
UBX-CFG-ANT.ocd	CFG-HW-ANT_CFG_OPENDET
UBX-CFG-ANT.pdwnOnSCD	CFG-HW-ANT_CFG_PWRDOWN
UBX-CFG-ANT.pinOCD	CFG-HW-ANT_SUP_OPEN_PIN
UBX-CFG-ANT.pinSCD	CFG-HW-ANT_SUP_SHORT_PIN
UBX-CFG-ANT.pinSwitch	CFG-HW-ANT_SUP_SWITCH_PIN
UBX-CFG-ANT.recovery	CFG-HW-ANT_CFG_RECOVER
UBX-CFG-ANT.scd	CFG-HW-ANT_CFG_SHORTDET
UBX-CFG-ANT.svcs	CFG-HW-ANT_CFG_VOLTCTRL
UBX-CFG-BATCH	
UBX-CFG-BATCH.bufSize	CFG-BATCH-MAXENTRIES
UBX-CFG-BATCH.enable	CFG-BATCH-ENABLE
UBX-CFG-BATCH.extraOdo	CFG-BATCH-EXTRAODO
UBX-CFG-BATCH.extraPvt	CFG-BATCH-EXTRAPVT
UBX-CFG-BATCH.notifThrs	CFG-BATCH-WARNTHRS
UBX-CFG-BATCH.pioActiveLow	CFG-BATCH-PIOACTIVELOW
UBX-CFG-BATCH.pioEnable	CFG-BATCH-PIOENABLE
UBX-CFG-BATCH.pioId	CFG-BATCH-PIOID
UBX-CFG-DAT	
UBX-CFG-DAT.dX	CFG-NAVSPG-USRDAT_DX
UBX-CFG-DAT.dY	CFG-NAVSPG-USRDAT_DY
UBX-CFG-DAT.dZ	CFG-NAVSPG-USRDAT_DZ
UBX-CFG-DAT.flat	CFG-NAVSPG-USRDAT_FLAT
UBX-CFG-DAT.majA	CFG-NAVSPG-USE_USRDAT, CFG-NAVSPG-USRDAT_MAJA
UBX-CFG-DAT.rotX	CFG-NAVSPG-USRDAT_ROTX
UBX-CFG-DAT.rotY	CFG-NAVSPG-USRDAT_ROTY
UBX-CFG-DAT.rotZ	CFG-NAVSPG-USRDAT_ROTZ

CONFIDENTIAL

UBX message and field	Configuration item(s)
UBX-CFG-DAT.scale	CFG-NAVSPG-USRDAT_SCALE
UBX-CFG-GEOFENCE	
UBX-CFG-GEOFENCE.confLvl	CFG-GEOFENCE-CONFLVL
UBX-CFG-GEOFENCE.lat	CFG-GEOFENCE-FENCE1_LAT, CFG-GEOFENCE-FENCE2_LAT, CFG-GEOFENCE-FENCE3_LAT, CFG-GEOFENCE-FENCE4_LAT
UBX-CFG-GEOFENCE.lon	CFG-GEOFENCE-FENCE1_LON, CFG-GEOFENCE-FENCE2_LON, CFG-GEOFENCE-FENCE3_LON, CFG-GEOFENCE-FENCE4_LON
UBX-CFG-GEOFENCE.numFences	CFG-GEOFENCE-USE_FENCE1, CFG-GEOFENCE-USE_FENCE2, CFG-GEOFENCE-USE_FENCE3, CFG-GEOFENCE-USE_FENCE4
UBX-CFG-GEOFENCE.pin	CFG-GEOFENCE-PIN
UBX-CFG-GEOFENCE.pinPolarity	CFG-GEOFENCE-PINPOL
UBX-CFG-GEOFENCE.pioEnabled	CFG-GEOFENCE-USE_PIO
UBX-CFG-GEOFENCE.radius	CFG-GEOFENCE-FENCE1_RAD, CFG-GEOFENCE-FENCE2_RAD, CFG-GEOFENCE-FENCE3_RAD, CFG-GEOFENCE-FENCE4_RAD
UBX-CFG-GNSS	
UBX-CFG-GNSS.gnssId	CFG-SIGNAL-GPS_ENA, CFG-SIGNAL-SBAS_ENA, CFG-SIGNAL-BDS_ENA, CFG-SIGNAL-QZSS_ENA, CFG-SIGNAL-GLO_ENA
UBX-CFG-INF	
UBX-CFG-INF.infMsgMask	CFG-INFMSG-UBX_I2C, CFG-INFMSG-UBX_UART1, CFG-INFMSG-UBX_UART2, CFG-INFMSG-UBX_USB, CFG-INFMSG-UBX_SPI, CFG-INFMSG-NMEA_I2C, CFG-INFMSG-NMEA_UART1, CFG-INFMSG-NMEA_UART2, CFG-INFMSG-NMEA_USB, CFG-INFMSG-NMEA_SPI
UBX-CFG-INF.protocolID	CFG-INFMSG-UBX_UART1, CFG-INFMSG-UBX_UART2, CFG-INFMSG-UBX_USB, CFG-INFMSG-UBX_SPI, CFG-INFMSG-NMEA_I2C, CFG-INFMSG-NMEA_UART1, CFG-INFMSG-NMEA_UART2, CFG-INFMSG-NMEA_USB, CFG-INFMSG-NMEA_SPI
UBX-CFG-ITFM	
UBX-CFG-ITFM.antSetting	CFG-ITFM-ANTSETTING
UBX-CFG-ITFM.bbThreshold	CFG-ITFM-BBTHRESHOLD
UBX-CFG-ITFM.cwThreshold	CFG-ITFM-CWTHRESHOLD
UBX-CFG-ITFM.enable	CFG-ITFM-ENABLE
UBX-CFG-ITFM.enable2	CFG-ITFM-ENABLE_AUX
UBX-CFG-LOGFILTER	
UBX-CFG-LOGFILTER.applyAllFilterSettings	CFG-LOGFILTER-APPLY_ALL_FILTERS
UBX-CFG-LOGFILTER.minInterval	CFG-LOGFILTER-MIN_INTERVAL
UBX-CFG-LOGFILTER.positionThreshold	CFG-LOGFILTER-POSITION_THRS
UBX-CFG-LOGFILTER.psmOncePerWakupEnabled	CFG-LOGFILTER-ONCE_PER_WAKE_UP_ENA
UBX-CFG-LOGFILTER.recordEnabled	CFG-LOGFILTER-RECORD_ENA
UBX-CFG-LOGFILTER.speedThreshold	CFG-LOGFILTER-SPEED_THRS
UBX-CFG-LOGFILTER.timeThreshold	CFG-LOGFILTER-TIME_THRS
UBX-CFG-MOT	
UBX-CFG-MOT.gnssDistThdl	CFG-MOT-GNSSDIST_THRS
UBX-CFG-MOT.gnssSpeedThdl	CFG-MOT-GNSSSPEED_THRS

CONFIDENTIAL

UBX message and field	Configuration item(s)
UBX-CFG-NAV5	
UBX-CFG-NAV5.cnoThresh	CFG-NAVSPG-INFIL_CNOTHRS
UBX-CFG-NAV5.cnoThreshNumSVs	CFG-NAVSPG-INFIL_NCNOTHRS
UBX-CFG-NAV5.dgnssTimeout	CFG-NAVSPG-CONSTR_DGNSSTO
UBX-CFG-NAV5.dynModel	CFG-NAVSPG-DYNMODEL
UBX-CFG-NAV5.fixMode	CFG-NAVSPG-FIXMODE
UBX-CFG-NAV5.fixedAlt	CFG-NAVSPG-CONSTR_ALT
UBX-CFG-NAV5.fixedAltVar	CFG-NAVSPG-CONSTR_ALTVAR
UBX-CFG-NAV5.minElev	CFG-NAVSPG-INFIL_MINELEV
UBX-CFG-NAV5.pAcc	CFG-NAVSPG-OUTFIL_PACC
UBX-CFG-NAV5.pDop	CFG-NAVSPG-OUTFIL_PDOP
UBX-CFG-NAV5.staticHoldMaxDist	CFG-MOT-GNSSDIST_THRS
UBX-CFG-NAV5.staticHoldThresh	CFG-MOT-GNSSSPEED_THRS
UBX-CFG-NAV5.tAcc	CFG-NAVSPG-OUTFIL_TACC, CFG-NAVSPG-OUTFIL_FACC
UBX-CFG-NAV5.tDop	CFG-NAVSPG-OUTFIL_TDOP
UBX-CFG-NAV5.utcStandard	CFG-NAVSPG-UTCSTANDARD
UBX-CFG-NAVX5	
UBX-CFG-NAVX5.ackAiding	CFG-NAVSPG-ACKAIDING
UBX-CFG-NAVX5.aopOrbMaxErr	CFG-ANA-ORBMAXERR
UBX-CFG-NAVX5.iniFix3D	CFG-NAVSPG-INIFIX3D
UBX-CFG-NAVX5.maxSVs	CFG-NAVSPG-INFIL_MAXSVS
UBX-CFG-NAVX5.minCNO	CFG-NAVSPG-INFIL_MINCNO
UBX-CFG-NAVX5.minSVs	CFG-NAVSPG-INFIL_MINSVS
UBX-CFG-NAVX5.sigAttenCompMode	CFG-NAVSPG-SIGATTCOMP
UBX-CFG-NAVX5.useAOP	CFG-ANA-USE_ANA
UBX-CFG-NAVX5.usePPP	CFG-NAVSPG-USE_PPP
UBX-CFG-NAVX5.wknRollover	CFG-NAVSPG-WKNROLLOVER
UBX-CFG-NMEA	
UBX-CFG-NMEA.bdsTalkerId	CFG-NMEA-BDSTALKERID
UBX-CFG-NMEA.beidou	CFG-NMEA-FILT_BDS
UBX-CFG-NMEA.compat	CFG-NMEA-COMPAT
UBX-CFG-NMEA.consider	CFG-NMEA-CONSIDER
UBX-CFG-NMEA.dateFilt	CFG-NMEA-OUT_INVDATE
UBX-CFG-NMEA.galileo	CFG-NMEA-FILT_GAL
UBX-CFG-NMEA.glonass	CFG-NMEA-FILT_GLO
UBX-CFG-NMEA.gps	CFG-NMEA-FILT_GPS
UBX-CFG-NMEA.gpsOnlyFilter	CFG-NMEA-OUT_ONLYGPS
UBX-CFG-NMEA.gsvTalkerId	CFG-NMEA-GSVTALKERID
UBX-CFG-NMEA.highPrec	CFG-NMEA-HIGHPREC
UBX-CFG-NMEA.limit82	CFG-NMEA-LIMIT82
UBX-CFG-NMEA.mainTalkerId	CFG-NMEA-MAINTALKERID
UBX-CFG-NMEA.mskPosFilt	CFG-NMEA-OUT_MSKFIX
UBX-CFG-NMEA.nmeaVersion	CFG-NMEA-PROTVER
UBX-CFG-NMEA.numSV	CFG-NMEA-MAXSVS

CONFIDENTIAL

UBX message and field	Configuration item(s)
UBX-CFG-NMEA.posFilt	CFG-NMEA-OUT_INVFIX
UBX-CFG-NMEA.qzss	CFG-NMEA-FILT_QZSS
UBX-CFG-NMEA.sbas	CFG-NMEA-FILT_SBAS
UBX-CFG-NMEA.svNumbering	CFG-NMEA-SVNUMBERING
UBX-CFG-NMEA.timeFilt	CFG-NMEA-OUT_INVTIME
UBX-CFG-NMEA.trackFilt	CFG-NMEA-OUT_FROZENCOG
UBX-CFG-ODO	
UBX-CFG-ODO.cogLpGain	CFG-ODO-COGLPGAIN
UBX-CFG-ODO.cogMaxPosAcc	CFG-ODO-COGMAXPOSACC
UBX-CFG-ODO.cogMaxSpeed	CFG-ODO-COGMAXSPEED
UBX-CFG-ODO.outLPCog	CFG-ODO-OUTLPCOG
UBX-CFG-ODO.outLPVel	CFG-ODO-OUTLPVEL
UBX-CFG-ODO.profile	CFG-ODO-PROFILE
UBX-CFG-ODO.useCOG	CFG-ODO-USE_COG
UBX-CFG-ODO.useODO	CFG-ODO-USE_ODO
UBX-CFG-ODO.velLpGain	CFG-ODO-VELLPGAIN
UBX-CFG-OTP	
UBX-CFG-OTP.payload	CFG-HW-DCDC_DIS, CFG-HW-SINGLE_CLK, CFG-HW-OSC_TYPE, CFG-UART1-REMAP
UBX-CFG-OTP.fileID	CFG-CLOCK-OSC_FREQ
UBX-CFG-OTP.maxCalibDeviation	CFG-HW-CLK_MAX_CALIB_DEV
UBX-CFG-OTP.maxCalibDeviationInvalid	CFG-HW-CLK_MAX_CALIB_DEV_VALID
UBX-CFG-OTP.offset	CFG-HW-CLK_OFFSET
UBX-CFG-OTP.offsetInvalid	CFG-HW-CLK_OFFSET_VALID
UBX-CFG-OTP.precision	CFG-HW-CLK_PRECISION
UBX-CFG-PM2	
UBX-CFG-PM2.doNotEnterOff	CFG-PM-DONOTENTEROFF
UBX-CFG-PM2.extintBackup	CFG-PM-EXTINTBACKUP
UBX-CFG-PM2.extintInactive	CFG-PM-EXTINTINACTIVE
UBX-CFG-PM2.extintInactivityMs	CFG-PM-EXTINTINACTIVITY
UBX-CFG-PM2.extintSel	CFG-PM-EXTINTSEL
UBX-CFG-PM2.extintWake	CFG-PM-EXTINTWAKE
UBX-CFG-PM2.gridOffset	CFG-PM-GRIDOFFSET
UBX-CFG-PM2.limitPeakCurr	CFG-PM-LIMITPEAKCURR
UBX-CFG-PM2.maxStartupStateDur	CFG-PM-MAXACQTIME
UBX-CFG-PM2.minAcqTime	CFG-PM-MINACQTIME
UBX-CFG-PM2.mode	CFG-PM-OPERATEMODE
UBX-CFG-PM2.onTime	CFG-PM-ONTIME
UBX-CFG-PM2.searchPeriod	CFG-PM-ACQPERIOD
UBX-CFG-PM2.updateEPH	CFG-PM-UPDATEEPH
UBX-CFG-PM2.updatePeriod	CFG-PM-POSUPDATEPERIOD
UBX-CFG-PM2.waitTimeFix	CFG-PM-WAITTIMEFIX
UBX-CFG-PRT	
UBX-CFG-PRT.en	CFG-TXREADY-ENABLED

CONFIDENTIAL

UBX message and field	Configuration item(s)
UBX-CFG-PRT.extendedTxTimeout	CFG-I2C-EXTENDEDTIMEOUT
UBX-CFG-PRT.inNmea	CFG-I2CINPROT-NMEA
UBX-CFG-PRT.inProtoMask	CFG-I2C-ENABLED
UBX-CFG-PRT.inRtcm3	CFG-I2CINPROT-RTCM3X
UBX-CFG-PRT.inUbx	CFG-I2CINPROT-UBX
UBX-CFG-PRT.outNmea	CFG-I2COUTPROT-NMEA
UBX-CFG-PRT.outProtoMask	CFG-I2C-ENABLED
UBX-CFG-PRT.outUbx	CFG-I2COUTPROT-UBX
UBX-CFG-PRT.pin	CFG-TXREADY-PIN
UBX-CFG-PRT.pol	CFG-TXREADY-POLARITY
UBX-CFG-PRT.slaveAddr	CFG-I2C-ADDRESS
UBX-CFG-PRT.thres	CFG-TXREADY-THRESHOLD
UBX-CFG-PRT.en	CFG-TXREADY-ENABLED
UBX-CFG-PRT.extendedTxTimeout	CFG-SPI-EXTENDEDTIMEOUT
UBX-CFG-PRT.ffCnt	CFG-SPI-MAXFF
UBX-CFG-PRT.inNmea	CFG-SPIINPROT-NMEA
UBX-CFG-PRT.inProtoMask	CFG-SPI-ENABLED
UBX-CFG-PRT.inRtcm3	CFG-SPIINPROT-RTCM3X
UBX-CFG-PRT.inUbx	CFG-SPIINPROT-UBX
UBX-CFG-PRT.outNmea	CFG-SPIOUTPROT-NMEA
UBX-CFG-PRT.outProtoMask	CFG-SPI-ENABLED
UBX-CFG-PRT.outUbx	CFG-SPIOUTPROT-UBX
UBX-CFG-PRT.pin	CFG-TXREADY-PIN
UBX-CFG-PRT.pol	CFG-TXREADY-POLARITY
UBX-CFG-PRT.spiMode	CFG-SPI-CPOLARITY, CFG-SPI-CPHASE
UBX-CFG-PRT.thres	CFG-TXREADY-THRESHOLD
UBX-CFG-PRT.baudRate	CFG-UART1-BAUDRATE, CFG-UART2-BAUDRATE
UBX-CFG-PRT.charLen	CFG-UART1-DATABITS, CFG-UART2-DATABITS
UBX-CFG-PRT.inNmea	CFG-UART1INPROT-NMEA, CFG-UART2INPROT-NMEA
UBX-CFG-PRT.inProtoMask	CFG-UART1-ENABLED, CFG-UART2-ENABLED
UBX-CFG-PRT.inRtcm3	CFG-UART1INPROT-RTCM3X, CFG-UART2INPROT-RTCM3X
UBX-CFG-PRT.inUbx	CFG-UART1INPROT-UBX, CFG-UART2INPROT-UBX
UBX-CFG-PRT.nStopBits	CFG-UART1-STOPBITS, CFG-UART2-STOPBITS
UBX-CFG-PRT.outNmea	CFG-UART1OUTPROT-NMEA, CFG-UART2OUTPROT-NMEA
UBX-CFG-PRT.outProtoMask	CFG-UART1-ENABLED, CFG-UART2-ENABLED
UBX-CFG-PRT.outUbx	CFG-UART1OUTPROT-UBX, CFG-UART2OUTPROT-UBX
UBX-CFG-PRT.parity	CFG-UART1-PARITY, CFG-UART2-PARITY
UBX-CFG-PRT.inNmea	CFG-USBINPROT-NMEA
UBX-CFG-PRT.inProtoMask	CFG-USB-ENABLED
UBX-CFG-PRT.inRtcm3	CFG-USBINPROT-RTCM3X
UBX-CFG-PRT.inUbx	CFG-USBINPROT-UBX
UBX-CFG-PRT.outNmea	CFG-USBOUTPROT-NMEA
UBX-CFG-PRT.outProtoMask	CFG-USB-ENABLED
UBX-CFG-PRT.outUbx	CFG-USBOUTPROT-UBX

CONFIDENTIAL

UBX message and field	Configuration item(s)
UBX-CFG-RATE	
UBX-CFG-RATE.measRate	CFG-RATE-MEAS
UBX-CFG-RATE.navRate	CFG-RATE-NAV
UBX-CFG-RATE.timeRef	CFG-RATE-TIMEREF
UBX-CFG-RINV	
UBX-CFG-RINV.data	CFG-RINV-DATA_SIZE, CFG-RINV-CHUNK0, CFG-RINV-CHUNK1, CFG-RINV-CHUNK2, CFG-RINV-CHUNK3
UBX-CFG-RINV.flags	CFG-RINV-DUMP, CFG-RINV-BINARY
UBX-CFG-SBAS	
UBX-CFG-SBAS.diffCorr	CFG-SBAS-USE_DIFFCORR
UBX-CFG-SBAS.integrity	CFG-SBAS-USE_INTEGRITY
UBX-CFG-SBAS.range	CFG-SBAS-USE_RANGING
UBX-CFG-SBAS.scanmode1	CFG-SBAS-PRNSCANMASK
UBX-CFG-SBAS.test	CFG-SBAS-USE_TESTMODE
UBX-CFG-SLAS	
UBX-CFG-SLAS.enabled	CFG-QZSS-USE_SLAS_DGNSS
UBX-CFG-SLAS.raim	CFG-QZSS-USE_SLAS_RAIM_UNCORR
UBX-CFG-SLAS.test	CFG-QZSS-USE_SLAS_TESTMODE
UBX-CFG-TP5	
UBX-CFG-TP5.active	CFG-TP-TP1_ENA, CFG-TP-TP2_ENA
UBX-CFG-TP5.alignToTow	CFG-TP-ALIGN_TO_TOW_TP1, CFG-TP-ALIGN_TO_TOW_TP2
UBX-CFG-TP5.antCableDelay	CFG-TP-ANT_CABLEDELAY
UBX-CFG-TP5.freqPeriod	CFG-TP-PERIOD_TP1, CFG-TP-FREQ_TP1, CFG-TP-PERIOD_TP2, CFG-TP-FREQ_TP2
UBX-CFG-TP5.freqPeriodLock	CFG-TP-PERIOD_LOCK_TP1, CFG-TP-FREQ_LOCK_TP1, CFG-TP-PERIOD_LOCK_TP2, CFG-TP-FREQ_LOCK_TP2
UBX-CFG-TP5.gridUtcGnss	CFG-TP-TIMEGRID_TP1, CFG-TP-TIMEGRID_TP2
UBX-CFG-TP5.isFreq	CFG-TP-PULSE_DEF
UBX-CFG-TP5.isLength	CFG-TP-PULSE_LENGTH_DEF
UBX-CFG-TP5.lockGnssFreq	CFG-TP-SYNC_GNSS_TP1, CFG-TP-SYNC_GNSS_TP2
UBX-CFG-TP5.lockedOtherSet	CFG-TP-USE_LOCKED_TP1, CFG-TP-USE_LOCKED_TP2
UBX-CFG-TP5.polarity	CFG-TP-POL_TP1, CFG-TP-POL_TP2
UBX-CFG-TP5.pulseLenRatio	CFG-TP-LEN_TP1, CFG-TP-DUTY_TP1, CFG-TP-LEN_TP2, CFG-TP-DUTY_TP2
UBX-CFG-TP5.pulseLenRatioLock	CFG-TP-LEN_LOCK_TP1, CFG-TP-DUTY_LOCK_TP1, CFG-TP-LEN_LOCK_TP2, CFG-TP-DUTY_LOCK_TP2
UBX-CFG-TP5.userConfigDelay	CFG-TP-USER_DELAY_TP1, CFG-TP-USER_DELAY_TP2
UBX-CFG-USB	
UBX-CFG-USB.powerConsumption	CFG-USB-POWER
UBX-CFG-USB.powerMode	CFG-USB-SELFPOW
UBX-CFG-USB.productID	CFG-USB-PRODUCT_ID
UBX-CFG-USB.productString	CFG-USB-PRODUCT_STR0, CFG-USB-PRODUCT_STR1, CFG-USB-PRODUCT_STR2, CFG-USB-PRODUCT_STR3
UBX-CFG-USB.serialNumber	CFG-USB-SERIAL_NO_STR0, CFG-USB-SERIAL_NO_STR1, CFG-USB-SERIAL_NO_STR2, CFG-USB-SERIAL_NO_STR3

CONFIDENTIAL

UBX message and field	Configuration item(s)
UBX-CFG-USB.vendorID	CFG-USB-VENDOR_ID
UBX-CFG-USB.vendorString	CFG-USB-VENDOR_STR0, CFG-USB-VENDOR_STR1, CFG-USB-VENDOR_STR2, CFG-USB-VENDOR_STR3

Table 68: Legacy UBX message fields and the corresponding configuration items

CONFIDENTIAL

Configuration defaults

The following tables contain the configuration defaults for the product firmware version *SPG 4.00*.

These values assume that the defaults have not been changed using the OTP layer configuration or the Pin layer configuration (see Default layer composite).

Configuration item	Key ID	Type	Scale	Unit	Default value
CFG-ANA-USE_ANA	0x10230001	L	-	-	0 (false)
CFG-ANA-ORBMAXERR	0x30230002	U2	-	m	100

Table 69: CFG-ANA configuration defaults

Configuration item	Key ID	Type	Scale	Unit	Default value
CFG-BATCH-ENABLE	0x10260013	L	-	-	0 (false)
CFG-BATCH-PIOENABLE	0x10260014	L	-	-	0 (false)
CFG-BATCH-MAXENTRIES	0x30260015	U2	-	-	0
CFG-BATCH-WARNTHRS	0x30260016	U2	-	-	0
CFG-BATCH-PIOACTIVELOW	0x10260018	L	-	-	0 (false)
CFG-BATCH-PIOID	0x20260019	U1	-	-	0
CFG-BATCH-EXTRAPVT	0x1026001a	L	-	-	0 (false)
CFG-BATCH-EXTRAODO	0x1026001b	L	-	-	0 (false)

Table 70: CFG-BATCH configuration defaults

Configuration item	Key ID	Type	Scale	Unit	Default value
CFG-CLOCK-OSC_FREQ	0x40a4000d	U4	-	Hz	26000000

Table 71: CFG-CLOCK configuration defaults

Configuration item	Key ID	Type	Scale	Unit	Default value
CFG-GEOFENCE-CONFLVL	0x20240011	E1	-	-	0 (L000)
CFG-GEOFENCE-USE_PIO	0x10240012	L	-	-	0 (false)
CFG-GEOFENCE-PINPOL	0x20240013	E1	-	-	0 (LOW_IN)
CFG-GEOFENCE-PIN	0x20240014	U1	-	-	0
CFG-GEOFENCE-USE_FENCE1	0x10240020	L	-	-	0 (false)
CFG-GEOFENCE-FENCE1_LAT	0x40240021	I4	1e-7	deg	0
CFG-GEOFENCE-FENCE1_LON	0x40240022	I4	1e-7	deg	0
CFG-GEOFENCE-FENCE1_RAD	0x40240023	U4	0.01	m	0
CFG-GEOFENCE-USE_FENCE2	0x10240030	L	-	-	0 (false)
CFG-GEOFENCE-FENCE2_LAT	0x40240031	I4	1e-7	deg	0
CFG-GEOFENCE-FENCE2_LON	0x40240032	I4	1e-7	deg	0
CFG-GEOFENCE-FENCE2_RAD	0x40240033	U4	0.01	m	0
CFG-GEOFENCE-USE_FENCE3	0x10240040	L	-	-	0 (false)
CFG-GEOFENCE-FENCE3_LAT	0x40240041	I4	1e-7	deg	0
CFG-GEOFENCE-FENCE3_LON	0x40240042	I4	1e-7	deg	0
CFG-GEOFENCE-FENCE3_RAD	0x40240043	U4	0.01	m	0
CFG-GEOFENCE-USE_FENCE4	0x10240050	L	-	-	0 (false)

CONFIDENTIAL

Configuration item	Key ID	Type	Scale	Unit	Default value
CFG-GEOFENCE-FENCE4_LAT	0x40240051	I4	1e-7	deg	0
CFG-GEOFENCE-FENCE4_LON	0x40240052	I4	1e-7	deg	0
CFG-GEOFENCE-FENCE4_RAD	0x40240053	U4	0.01	m	0

Table 72: CFG-GEOFENCE configuration defaults

Configuration item	Key ID	Type	Scale	Unit	Default value
CFG-HW-DCDC_DIS	0x10a30018	L	-	-	1 (true)
CFG-HW-SINGLE_CLK	0x10a30019	L	-	-	0 (false)
CFG-HW-OSC_TYPE	0x20a30025	E1	-	-	0 (TCXO_D1V2)
CFG-HW-CLK_OFFSET	0x40a30028	I4	-	ppb	0
CFG-HW-CLK_OFFSET_VALID	0x10a30029	L	-	-	0 (false)
CFG-HW-CLK_PRECISION	0x40a3002a	U4	-	ppb	0
CFG-HW-CLK_MAX_CALIB_DEV	0x40a3002b	U4	-	ppb	0
CFG-HW-CLK_MAX_CALIB_DEV_VALID	0x10a3002c	L	-	-	0 (false)
CFG-HW-ANT_CFG_VOLTCTRL	0x10a3002e	L	-	-	0 (false)
CFG-HW-ANT_CFG_SHORTDET	0x10a3002f	L	-	-	0 (false)
CFG-HW-ANT_CFG_SHORTDET_POL	0x10a30030	L	-	-	1 (true)
CFG-HW-ANT_CFG_OPENDET	0x10a30031	L	-	-	0 (false)
CFG-HW-ANT_CFG_OPENDET_POL	0x10a30032	L	-	-	1 (true)
CFG-HW-ANT_CFG_PWRDOWN	0x10a30033	L	-	-	0 (false)
CFG-HW-ANT_CFG_PWRDOWN_POL	0x10a30034	L	-	-	1 (true)
CFG-HW-ANT_CFG_RECOVER	0x10a30035	L	-	-	0 (false)
CFG-HW-ANT_SUP_SWITCH_PIN	0x20a30036	U1	-	-	16
CFG-HW-ANT_SUP_SHORT_PIN	0x20a30037	U1	-	-	15
CFG-HW-ANT_SUP_OPEN_PIN	0x20a30038	U1	-	-	8

Table 73: CFG-HW configuration defaults

Configuration item	Key ID	Type	Scale	Unit	Default value
CFG-I2C-ADDRESS	0x20510001	U1	-	-	132
CFG-I2C-EXTENDEDTIMEOUT	0x10510002	L	-	-	0 (false)
CFG-I2C-ENABLED	0x10510003	L	-	-	1 (true)

Table 74: CFG-I2C configuration defaults

Configuration item	Key ID	Type	Scale	Unit	Default value
CFG-I2CINPROT-UBX	0x10710001	L	-	-	1 (true)
CFG-I2CINPROT-NMEA	0x10710002	L	-	-	1 (true)
CFG-I2CINPROT-RTCM3X	0x10710004	L	-	-	1 (true)

Table 75: CFG-I2CINPROT configuration defaults

Configuration item	Key ID	Type	Scale	Unit	Default value
CFG-I2COUTPROT-UBX	0x10720001	L	-	-	1 (true)
CFG-I2COUTPROT-NMEA	0x10720002	L	-	-	1 (true)

Table 76: CFG-I2COUTPROT configuration defaults

CONFIDENTIAL

Configuration item	Key ID	Type	Scale	Unit	Default value
CFG-INFMSG-UBX_I2C	0x20920001	X1	-	-	0x00
CFG-INFMSG-UBX_UART1	0x20920002	X1	-	-	0x00
CFG-INFMSG-UBX_UART2	0x20920003	X1	-	-	0x00
CFG-INFMSG-UBX_USB	0x20920004	X1	-	-	0x00
CFG-INFMSG-UBX_SPI	0x20920005	X1	-	-	0x00
CFG-INFMSG-NMEA_I2C	0x20920006	X1	-	-	0x07 (ERROR | WARNING | NOTICE)
CFG-INFMSG-NMEA_UART1	0x20920007	X1	-	-	0x07 (ERROR | WARNING | NOTICE)
CFG-INFMSG-NMEA_UART2	0x20920008	X1	-	-	0x07 (ERROR | WARNING | NOTICE)
CFG-INFMSG-NMEA_USB	0x20920009	X1	-	-	0x07 (ERROR | WARNING | NOTICE)
CFG-INFMSG-NMEA_SPI	0x2092000a	X1	-	-	0x07 (ERROR | WARNING | NOTICE)

Table 77: CFG-INFMSG configuration defaults

Configuration item	Key ID	Type	Scale	Unit	Default value
CFG-ITFM-BBTHRESHOLD	0x20410001	U1	-	-	3
CFG-ITFM-CWTHRESHOLD	0x20410002	U1	-	-	15
CFG-ITFM-ENABLE	0x1041000d	L	-	-	0 (false)
CFG-ITFM-ANTSETTING	0x20410010	E1	-	-	0 (UNKNOWN)
CFG-ITFM-ENABLE_AUX	0x10410013	L	-	-	0 (false)

Table 78: CFG-ITFM configuration defaults

Configuration item	Key ID	Type	Scale	Unit	Default value
CFG-LOGFILTER-RECORD_ENA	0x10de0002	L	-	-	0 (false)
CFG-LOGFILTER-ONCE_PER_WAKE_UP_ENA	0x10de0003	L	-	-	0 (false)
CFG-LOGFILTER-APPLY_ALL_FILTERS	0x10de0004	L	-	-	0 (false)
CFG-LOGFILTER-MIN_INTERVAL	0x30de0005	U2	-	s	0
CFG-LOGFILTER-TIME_THRS	0x30de0006	U2	-	s	0
CFG-LOGFILTER-SPEED_THRS	0x30de0007	U2	-	m/s	0
CFG-LOGFILTER-POSITION_THRS	0x40de0008	U4	-	m	0

Table 79: CFG-LOGFILTER configuration defaults

Configuration item	Key ID	Type	Scale	Unit	Default value
CFG-MOT-GNSSSPEED_THRS	0x20250038	U1	0.01	m/s	0
CFG-MOT-GNSSDIST_THRS	0x3025003b	U2	-	-	0

Table 80: CFG-MOT configuration defaults

Configuration item	Key ID	Type	Scale	Unit	Default value
CFG-MSGOUT-NMEA_ID_DTM_I2C	0x209100a6	U1	-	-	0
CFG-MSGOUT-NMEA_ID_DTM_SPI	0x209100aa	U1	-	-	0
CFG-MSGOUT-NMEA_ID_DTM_UART1	0x209100a7	U1	-	-	0
CFG-MSGOUT-NMEA_ID_DTM_UART2	0x209100a8	U1	-	-	0
CFG-MSGOUT-NMEA_ID_DTM_USB	0x209100a9	U1	-	-	0

CONFIDENTIAL

Configuration item	Key ID	Type	Scale	Unit	Default value
CFG-MSGOUT-NMEA_ID_GBS_I2C	0x209100dd	U1	-	-	0
CFG-MSGOUT-NMEA_ID_GBS_SPI	0x209100e1	U1	-	-	0
CFG-MSGOUT-NMEA_ID_GBS_UART1	0x209100de	U1	-	-	0
CFG-MSGOUT-NMEA_ID_GBS_UART2	0x209100df	U1	-	-	0
CFG-MSGOUT-NMEA_ID_GBS_USB	0x209100e0	U1	-	-	0
CFG-MSGOUT-NMEA_ID_GGA_I2C	0x209100ba	U1	-	-	1
CFG-MSGOUT-NMEA_ID_GGA_SPI	0x209100be	U1	-	-	1
CFG-MSGOUT-NMEA_ID_GGA_UART1	0x209100bb	U1	-	-	1
CFG-MSGOUT-NMEA_ID_GGA_UART2	0x209100bc	U1	-	-	1
CFG-MSGOUT-NMEA_ID_GGA_USB	0x209100bd	U1	-	-	1
CFG-MSGOUT-NMEA_ID_GLL_I2C	0x209100c9	U1	-	-	1
CFG-MSGOUT-NMEA_ID_GLL_SPI	0x209100cd	U1	-	-	1
CFG-MSGOUT-NMEA_ID_GLL_UART1	0x209100ca	U1	-	-	1
CFG-MSGOUT-NMEA_ID_GLL_UART2	0x209100cb	U1	-	-	1
CFG-MSGOUT-NMEA_ID_GLL_USB	0x209100cc	U1	-	-	1
CFG-MSGOUT-NMEA_ID_GNS_I2C	0x209100b5	U1	-	-	0
CFG-MSGOUT-NMEA_ID_GNS_SPI	0x209100b9	U1	-	-	0
CFG-MSGOUT-NMEA_ID_GNS_UART1	0x209100b6	U1	-	-	0
CFG-MSGOUT-NMEA_ID_GNS_UART2	0x209100b7	U1	-	-	0
CFG-MSGOUT-NMEA_ID_GNS_USB	0x209100b8	U1	-	-	0
CFG-MSGOUT-NMEA_ID_GRS_I2C	0x209100ce	U1	-	-	0
CFG-MSGOUT-NMEA_ID_GRS_SPI	0x209100d2	U1	-	-	0
CFG-MSGOUT-NMEA_ID_GRS_UART1	0x209100cf	U1	-	-	0
CFG-MSGOUT-NMEA_ID_GRS_UART2	0x209100d0	U1	-	-	0
CFG-MSGOUT-NMEA_ID_GRS_USB	0x209100d1	U1	-	-	0
CFG-MSGOUT-NMEA_ID_GSA_I2C	0x209100bf	U1	-	-	1
CFG-MSGOUT-NMEA_ID_GSA_SPI	0x209100c3	U1	-	-	1
CFG-MSGOUT-NMEA_ID_GSA_UART1	0x209100c0	U1	-	-	1
CFG-MSGOUT-NMEA_ID_GSA_UART2	0x209100c1	U1	-	-	1
CFG-MSGOUT-NMEA_ID_GSA_USB	0x209100c2	U1	-	-	1
CFG-MSGOUT-NMEA_ID_GST_I2C	0x209100d3	U1	-	-	0
CFG-MSGOUT-NMEA_ID_GST_SPI	0x209100d7	U1	-	-	0
CFG-MSGOUT-NMEA_ID_GST_UART1	0x209100d4	U1	-	-	0
CFG-MSGOUT-NMEA_ID_GST_UART2	0x209100d5	U1	-	-	0
CFG-MSGOUT-NMEA_ID_GST_USB	0x209100d6	U1	-	-	0
CFG-MSGOUT-NMEA_ID_GSV_I2C	0x209100c4	U1	-	-	1
CFG-MSGOUT-NMEA_ID_GSV_SPI	0x209100c8	U1	-	-	1
CFG-MSGOUT-NMEA_ID_GSV_UART1	0x209100c5	U1	-	-	1
CFG-MSGOUT-NMEA_ID_GSV_UART2	0x209100c6	U1	-	-	1
CFG-MSGOUT-NMEA_ID_GSV_USB	0x209100c7	U1	-	-	1
CFG-MSGOUT-NMEA_ID_RLM_I2C	0x20910400	U1	-	-	0

CONFIDENTIAL

Configuration item	Key ID	Type	Scale	Unit	Default value
CFG-MSGOUT-NMEA_ID_RLM_SPI	0x20910404	U1	-	-	0
CFG-MSGOUT-NMEA_ID_RLM_UART1	0x20910401	U1	-	-	0
CFG-MSGOUT-NMEA_ID_RLM_UART2	0x20910402	U1	-	-	0
CFG-MSGOUT-NMEA_ID_RLM_USB	0x20910403	U1	-	-	0
CFG-MSGOUT-NMEA_ID_RMC_I2C	0x209100ab	U1	-	-	1
CFG-MSGOUT-NMEA_ID_RMC_SPI	0x209100af	U1	-	-	1
CFG-MSGOUT-NMEA_ID_RMC_UART1	0x209100ac	U1	-	-	1
CFG-MSGOUT-NMEA_ID_RMC_UART2	0x209100ad	U1	-	-	1
CFG-MSGOUT-NMEA_ID_RMC_USB	0x209100ae	U1	-	-	1
CFG-MSGOUT-NMEA_ID_VLW_I2C	0x209100e7	U1	-	-	0
CFG-MSGOUT-NMEA_ID_VLW_SPI	0x209100eb	U1	-	-	0
CFG-MSGOUT-NMEA_ID_VLW_UART1	0x209100e8	U1	-	-	0
CFG-MSGOUT-NMEA_ID_VLW_UART2	0x209100e9	U1	-	-	0
CFG-MSGOUT-NMEA_ID_VLW_USB	0x209100ea	U1	-	-	0
CFG-MSGOUT-NMEA_ID_VTG_I2C	0x209100b0	U1	-	-	1
CFG-MSGOUT-NMEA_ID_VTG_SPI	0x209100b4	U1	-	-	1
CFG-MSGOUT-NMEA_ID_VTG_UART1	0x209100b1	U1	-	-	1
CFG-MSGOUT-NMEA_ID_VTG_UART2	0x209100b2	U1	-	-	1
CFG-MSGOUT-NMEA_ID_VTG_USB	0x209100b3	U1	-	-	1
CFG-MSGOUT-NMEA_ID_ZDA_I2C	0x209100d8	U1	-	-	0
CFG-MSGOUT-NMEA_ID_ZDA_SPI	0x209100dc	U1	-	-	0
CFG-MSGOUT-NMEA_ID_ZDA_UART1	0x209100d9	U1	-	-	0
CFG-MSGOUT-NMEA_ID_ZDA_UART2	0x209100da	U1	-	-	0
CFG-MSGOUT-NMEA_ID_ZDA_USB	0x209100db	U1	-	-	0
CFG-MSGOUT-PUBX_ID_POLYP_I2C	0x209100ec	U1	-	-	0
CFG-MSGOUT-PUBX_ID_POLYP_SPI	0x209100f0	U1	-	-	0
CFG-MSGOUT-PUBX_ID_POLYP_UART1	0x209100ed	U1	-	-	0
CFG-MSGOUT-PUBX_ID_POLYP_UART2	0x209100ee	U1	-	-	0
CFG-MSGOUT-PUBX_ID_POLYP_USB	0x209100ef	U1	-	-	0
CFG-MSGOUT-PUBX_ID_POLYS_I2C	0x209100f1	U1	-	-	0
CFG-MSGOUT-PUBX_ID_POLYS_SPI	0x209100f5	U1	-	-	0
CFG-MSGOUT-PUBX_ID_POLYS_UART1	0x209100f2	U1	-	-	0
CFG-MSGOUT-PUBX_ID_POLYS_UART2	0x209100f3	U1	-	-	0
CFG-MSGOUT-PUBX_ID_POLYS_USB	0x209100f4	U1	-	-	0
CFG-MSGOUT-PUBX_ID_POLYT_I2C	0x209100f6	U1	-	-	0
CFG-MSGOUT-PUBX_ID_POLYT_SPI	0x209100fa	U1	-	-	0
CFG-MSGOUT-PUBX_ID_POLYT_UART1	0x209100f7	U1	-	-	0
CFG-MSGOUT-PUBX_ID_POLYT_UART2	0x209100f8	U1	-	-	0
CFG-MSGOUT-PUBX_ID_POLYT_USB	0x209100f9	U1	-	-	0
CFG-MSGOUT-UBX_LOG_INFO_I2C	0x20910259	U1	-	-	0
CFG-MSGOUT-UBX_LOG_INFO_SPI	0x2091025d	U1	-	-	0

CONFIDENTIAL

Configuration item	Key ID	Type	Scale	Unit	Default value
CFG-MSGOUT-UBX_LOG_INFO_UART1	0x2091025a	U1	-	-	0
CFG-MSGOUT-UBX_LOG_INFO_UART2	0x2091025b	U1	-	-	0
CFG-MSGOUT-UBX_LOG_INFO_USB	0x2091025c	U1	-	-	0
CFG-MSGOUT-UBX_MON_COMMS_I2C	0x2091034f	U1	-	-	0
CFG-MSGOUT-UBX_MON_COMMS_SPI	0x20910353	U1	-	-	0
CFG-MSGOUT-UBX_MON_COMMS_UART1	0x20910350	U1	-	-	0
CFG-MSGOUT-UBX_MON_COMMS_UART2	0x20910351	U1	-	-	0
CFG-MSGOUT-UBX_MON_COMMS_USB	0x20910352	U1	-	-	0
CFG-MSGOUT-UBX_MON_HW2_I2C	0x209101b9	U1	-	-	0
CFG-MSGOUT-UBX_MON_HW2_SPI	0x209101bd	U1	-	-	0
CFG-MSGOUT-UBX_MON_HW2_UART1	0x209101ba	U1	-	-	0
CFG-MSGOUT-UBX_MON_HW2_UART2	0x209101bb	U1	-	-	0
CFG-MSGOUT-UBX_MON_HW2_USB	0x209101bc	U1	-	-	0
CFG-MSGOUT-UBX_MON_HW3_I2C	0x20910354	U1	-	-	0
CFG-MSGOUT-UBX_MON_HW3_SPI	0x20910358	U1	-	-	0
CFG-MSGOUT-UBX_MON_HW3_UART1	0x20910355	U1	-	-	0
CFG-MSGOUT-UBX_MON_HW3_UART2	0x20910356	U1	-	-	0
CFG-MSGOUT-UBX_MON_HW3_USB	0x20910357	U1	-	-	0
CFG-MSGOUT-UBX_MON_HW_I2C	0x209101b4	U1	-	-	0
CFG-MSGOUT-UBX_MON_HW_SPI	0x209101b8	U1	-	-	0
CFG-MSGOUT-UBX_MON_HW_UART1	0x209101b5	U1	-	-	0
CFG-MSGOUT-UBX_MON_HW_UART2	0x209101b6	U1	-	-	0
CFG-MSGOUT-UBX_MON_HW_USB	0x209101b7	U1	-	-	0
CFG-MSGOUT-UBX_MON_IO_I2C	0x209101a5	U1	-	-	0
CFG-MSGOUT-UBX_MON_IO_SPI	0x209101a9	U1	-	-	0
CFG-MSGOUT-UBX_MON_IO_UART1	0x209101a6	U1	-	-	0
CFG-MSGOUT-UBX_MON_IO_UART2	0x209101a7	U1	-	-	0
CFG-MSGOUT-UBX_MON_IO_USB	0x209101a8	U1	-	-	0
CFG-MSGOUT-UBX_MON_MSGPP_I2C	0x20910196	U1	-	-	0
CFG-MSGOUT-UBX_MON_MSGPP_SPI	0x2091019a	U1	-	-	0
CFG-MSGOUT-UBX_MON_MSGPP_UART1	0x20910197	U1	-	-	0
CFG-MSGOUT-UBX_MON_MSGPP_UART2	0x20910198	U1	-	-	0
CFG-MSGOUT-UBX_MON_MSGPP_USB	0x20910199	U1	-	-	0
CFG-MSGOUT-UBX_MON_PT2_I2C	0x20910209	U1	-	-	0
CFG-MSGOUT-UBX_MON_PT2_SPI	0x2091020d	U1	-	-	0
CFG-MSGOUT-UBX_MON_PT2_UART1	0x2091020a	U1	-	-	0
CFG-MSGOUT-UBX_MON_PT2_UART2	0x2091020b	U1	-	-	0
CFG-MSGOUT-UBX_MON_PT2_USB	0x2091020c	U1	-	-	0
CFG-MSGOUT-UBX_MON_RF_I2C	0x20910359	U1	-	-	0
CFG-MSGOUT-UBX_MON_RF_SPI	0x2091035d	U1	-	-	0
CFG-MSGOUT-UBX_MON_RF_UART1	0x2091035a	U1	-	-	0

CONFIDENTIAL

Configuration item	Key ID	Type	Scale	Unit	Default value
CFG-MSGOUT-UBX_MON_RF_UART2	0x2091035b	U1	-	-	0
CFG-MSGOUT-UBX_MON_RF_USB	0x2091035c	U1	-	-	0
CFG-MSGOUT-UBX_MON_RXBUF_I2C	0x209101a0	U1	-	-	0
CFG-MSGOUT-UBX_MON_RXBUF_SPI	0x209101a4	U1	-	-	0
CFG-MSGOUT-UBX_MON_RXBUF_UART1	0x209101a1	U1	-	-	0
CFG-MSGOUT-UBX_MON_RXBUF_UART2	0x209101a2	U1	-	-	0
CFG-MSGOUT-UBX_MON_RXBUF_USB	0x209101a3	U1	-	-	0
CFG-MSGOUT-UBX_MON_RXR_I2C	0x20910187	U1	-	-	0
CFG-MSGOUT-UBX_MON_RXR_SPI	0x2091018b	U1	-	-	0
CFG-MSGOUT-UBX_MON_RXR_UART1	0x20910188	U1	-	-	0
CFG-MSGOUT-UBX_MON_RXR_UART2	0x20910189	U1	-	-	0
CFG-MSGOUT-UBX_MON_RXR_USB	0x2091018a	U1	-	-	0
CFG-MSGOUT-UBX_MON_SPAN_I2C	0x2091038b	U1	-	-	0
CFG-MSGOUT-UBX_MON_SPAN_SPI	0x2091038f	U1	-	-	0
CFG-MSGOUT-UBX_MON_SPAN_UART1	0x2091038c	U1	-	-	0
CFG-MSGOUT-UBX_MON_SPAN_UART2	0x2091038d	U1	-	-	0
CFG-MSGOUT-UBX_MON_SPAN_USB	0x2091038e	U1	-	-	0
CFG-MSGOUT-UBX_MON_TEMP_I2C	0x20910331	U1	-	-	0
CFG-MSGOUT-UBX_MON_TEMP_SPI	0x20910335	U1	-	-	0
CFG-MSGOUT-UBX_MON_TEMP_UART1	0x20910332	U1	-	-	0
CFG-MSGOUT-UBX_MON_TEMP_UART2	0x20910333	U1	-	-	0
CFG-MSGOUT-UBX_MON_TEMP_USB	0x20910334	U1	-	-	0
CFG-MSGOUT-UBX_MON_TXBUF_I2C	0x2091019b	U1	-	-	0
CFG-MSGOUT-UBX_MON_TXBUF_SPI	0x2091019f	U1	-	-	0
CFG-MSGOUT-UBX_MON_TXBUF_UART1	0x2091019c	U1	-	-	0
CFG-MSGOUT-UBX_MON_TXBUF_UART2	0x2091019d	U1	-	-	0
CFG-MSGOUT-UBX_MON_TXBUF_USB	0x2091019e	U1	-	-	0
CFG-MSGOUT-UBX_NAV_AOPSTATUS_I2C	0x20910079	U1	-	-	0
CFG-MSGOUT-UBX_NAV_AOPSTATUS_SPI	0x2091007d	U1	-	-	0
CFG-MSGOUT-UBX_NAV_AOPSTATUS_UART1	0x2091007a	U1	-	-	0
CFG-MSGOUT-UBX_NAV_AOPSTATUS_UART2	0x2091007b	U1	-	-	0
CFG-MSGOUT-UBX_NAV_AOPSTATUS_USB	0x2091007c	U1	-	-	0
CFG-MSGOUT-UBX_NAV_CLOCK_I2C	0x20910065	U1	-	-	0
CFG-MSGOUT-UBX_NAV_CLOCK_SPI	0x20910069	U1	-	-	0
CFG-MSGOUT-UBX_NAV_CLOCK_UART1	0x20910066	U1	-	-	0
CFG-MSGOUT-UBX_NAV_CLOCK_UART2	0x20910067	U1	-	-	0
CFG-MSGOUT-UBX_NAV_CLOCK_USB	0x20910068	U1	-	-	0
CFG-MSGOUT-UBX_NAV_COV_I2C	0x20910083	U1	-	-	0
CFG-MSGOUT-UBX_NAV_COV_SPI	0x20910087	U1	-	-	0
CFG-MSGOUT-UBX_NAV_COV_UART1	0x20910084	U1	-	-	0
CFG-MSGOUT-UBX_NAV_COV_UART2	0x20910085	U1	-	-	0

CONFIDENTIAL

Configuration item	Key ID	Type	Scale	Unit	Default value
CFG-MSGOUT-UBX_NAV_COV_USB	0x20910086	U1	-	-	0
CFG-MSGOUT-UBX_NAV_DOP_I2C	0x20910038	U1	-	-	0
CFG-MSGOUT-UBX_NAV_DOP_SPI	0x2091003c	U1	-	-	0
CFG-MSGOUT-UBX_NAV_DOP_UART1	0x20910039	U1	-	-	0
CFG-MSGOUT-UBX_NAV_DOP_UART2	0x2091003a	U1	-	-	0
CFG-MSGOUT-UBX_NAV_DOP_USB	0x2091003b	U1	-	-	0
CFG-MSGOUT-UBX_NAV_EELL_I2C	0x20910313	U1	-	-	0
CFG-MSGOUT-UBX_NAV_EELL_SPI	0x20910317	U1	-	-	0
CFG-MSGOUT-UBX_NAV_EELL_UART1	0x20910314	U1	-	-	0
CFG-MSGOUT-UBX_NAV_EELL_UART2	0x20910315	U1	-	-	0
CFG-MSGOUT-UBX_NAV_EELL_USB	0x20910316	U1	-	-	0
CFG-MSGOUT-UBX_NAV_EOE_I2C	0x2091015f	U1	-	-	0
CFG-MSGOUT-UBX_NAV_EOE_SPI	0x20910163	U1	-	-	0
CFG-MSGOUT-UBX_NAV_EOE_UART1	0x20910160	U1	-	-	0
CFG-MSGOUT-UBX_NAV_EOE_UART2	0x20910161	U1	-	-	0
CFG-MSGOUT-UBX_NAV_EOE_USB	0x20910162	U1	-	-	0
CFG-MSGOUT-UBX_NAV_GEOFENCE_I2C	0x209100a1	U1	-	-	0
CFG-MSGOUT-UBX_NAV_GEOFENCE_SPI	0x209100a5	U1	-	-	0
CFG-MSGOUT-UBX_NAV_GEOFENCE_UART1	0x209100a2	U1	-	-	0
CFG-MSGOUT-UBX_NAV_GEOFENCE_UART2	0x209100a3	U1	-	-	0
CFG-MSGOUT-UBX_NAV_GEOFENCE_USB	0x209100a4	U1	-	-	0
CFG-MSGOUT-UBX_NAV_ODO_I2C	0x2091007e	U1	-	-	0
CFG-MSGOUT-UBX_NAV_ODO_SPI	0x20910082	U1	-	-	0
CFG-MSGOUT-UBX_NAV_ODO_UART1	0x2091007f	U1	-	-	0
CFG-MSGOUT-UBX_NAV_ODO_UART2	0x20910080	U1	-	-	0
CFG-MSGOUT-UBX_NAV_ODO_USB	0x20910081	U1	-	-	0
CFG-MSGOUT-UBX_NAV_ORB_I2C	0x20910010	U1	-	-	0
CFG-MSGOUT-UBX_NAV_ORB_SPI	0x20910014	U1	-	-	0
CFG-MSGOUT-UBX_NAV_ORB_UART1	0x20910011	U1	-	-	0
CFG-MSGOUT-UBX_NAV_ORB_UART2	0x20910012	U1	-	-	0
CFG-MSGOUT-UBX_NAV_ORB_USB	0x20910013	U1	-	-	0
CFG-MSGOUT-UBX_NAV_POSECEF_I2C	0x20910024	U1	-	-	0
CFG-MSGOUT-UBX_NAV_POSECEF_SPI	0x20910028	U1	-	-	0
CFG-MSGOUT-UBX_NAV_POSECEF_UART1	0x20910025	U1	-	-	0
CFG-MSGOUT-UBX_NAV_POSECEF_UART2	0x20910026	U1	-	-	0
CFG-MSGOUT-UBX_NAV_POSECEF_USB	0x20910027	U1	-	-	0
CFG-MSGOUT-UBX_NAV_POSLLH_I2C	0x20910029	U1	-	-	0
CFG-MSGOUT-UBX_NAV_POSLLH_SPI	0x2091002d	U1	-	-	0
CFG-MSGOUT-UBX_NAV_POSLLH_UART1	0x2091002a	U1	-	-	0
CFG-MSGOUT-UBX_NAV_POSLLH_UART2	0x2091002b	U1	-	-	0
CFG-MSGOUT-UBX_NAV_POSLLH_USB	0x2091002c	U1	-	-	0

CONFIDENTIAL

Configuration item	Key ID	Type	Scale	Unit	Default value
CFG-MSGOUT-UBX_NAV_PVT_I2C	0x20910006	U1	-	-	0
CFG-MSGOUT-UBX_NAV_PVT_SPI	0x2091000a	U1	-	-	0
CFG-MSGOUT-UBX_NAV_PVT_UART1	0x20910007	U1	-	-	0
CFG-MSGOUT-UBX_NAV_PVT_UART2	0x20910008	U1	-	-	0
CFG-MSGOUT-UBX_NAV_PVT_USB	0x20910009	U1	-	-	0
CFG-MSGOUT-UBX_NAV_SAT_I2C	0x20910015	U1	-	-	0
CFG-MSGOUT-UBX_NAV_SAT_SPI	0x20910019	U1	-	-	0
CFG-MSGOUT-UBX_NAV_SAT_UART1	0x20910016	U1	-	-	0
CFG-MSGOUT-UBX_NAV_SAT_UART2	0x20910017	U1	-	-	0
CFG-MSGOUT-UBX_NAV_SAT_USB	0x20910018	U1	-	-	0
CFG-MSGOUT-UBX_NAV_SBAS_I2C	0x2091006a	U1	-	-	0
CFG-MSGOUT-UBX_NAV_SBAS_SPI	0x2091006e	U1	-	-	0
CFG-MSGOUT-UBX_NAV_SBAS_UART1	0x2091006b	U1	-	-	0
CFG-MSGOUT-UBX_NAV_SBAS_UART2	0x2091006c	U1	-	-	0
CFG-MSGOUT-UBX_NAV_SBAS_USB	0x2091006d	U1	-	-	0
CFG-MSGOUT-UBX_NAV_SIG_I2C	0x20910345	U1	-	-	0
CFG-MSGOUT-UBX_NAV_SIG_SPI	0x20910349	U1	-	-	0
CFG-MSGOUT-UBX_NAV_SIG_UART1	0x20910346	U1	-	-	0
CFG-MSGOUT-UBX_NAV_SIG_UART2	0x20910347	U1	-	-	0
CFG-MSGOUT-UBX_NAV_SIG_USB	0x20910348	U1	-	-	0
CFG-MSGOUT-UBX_NAV_SLAS_I2C	0x20910336	U1	-	-	0
CFG-MSGOUT-UBX_NAV_SLAS_SPI	0x2091033a	U1	-	-	0
CFG-MSGOUT-UBX_NAV_SLAS_UART1	0x20910337	U1	-	-	0
CFG-MSGOUT-UBX_NAV_SLAS_UART2	0x20910338	U1	-	-	0
CFG-MSGOUT-UBX_NAV_SLAS_USB	0x20910339	U1	-	-	0
CFG-MSGOUT-UBX_NAV_STATUS_I2C	0x2091001a	U1	-	-	0
CFG-MSGOUT-UBX_NAV_STATUS_SPI	0x2091001e	U1	-	-	0
CFG-MSGOUT-UBX_NAV_STATUS_UART1	0x2091001b	U1	-	-	0
CFG-MSGOUT-UBX_NAV_STATUS_UART2	0x2091001c	U1	-	-	0
CFG-MSGOUT-UBX_NAV_STATUS_USB	0x2091001d	U1	-	-	0
CFG-MSGOUT-UBX_NAV_TIMEBDS_I2C	0x20910051	U1	-	-	0
CFG-MSGOUT-UBX_NAV_TIMEBDS_SPI	0x20910055	U1	-	-	0
CFG-MSGOUT-UBX_NAV_TIMEBDS_UART1	0x20910052	U1	-	-	0
CFG-MSGOUT-UBX_NAV_TIMEBDS_UART2	0x20910053	U1	-	-	0
CFG-MSGOUT-UBX_NAV_TIMEBDS_USB	0x20910054	U1	-	-	0
CFG-MSGOUT-UBX_NAV_TIMEGAL_I2C	0x20910056	U1	-	-	0
CFG-MSGOUT-UBX_NAV_TIMEGAL_SPI	0x2091005a	U1	-	-	0
CFG-MSGOUT-UBX_NAV_TIMEGAL_UART1	0x20910057	U1	-	-	0
CFG-MSGOUT-UBX_NAV_TIMEGAL_UART2	0x20910058	U1	-	-	0
CFG-MSGOUT-UBX_NAV_TIMEGAL_USB	0x20910059	U1	-	-	0
CFG-MSGOUT-UBX_NAV_TIMEGLO_I2C	0x2091004c	U1	-	-	0

CONFIDENTIAL

Configuration item	Key ID	Type	Scale	Unit	Default value
CFG-MSGOUT-UBX_NAV_TIMEGLO_SPI	0x20910050	U1	-	-	0
CFG-MSGOUT-UBX_NAV_TIMEGLO_UART1	0x2091004d	U1	-	-	0
CFG-MSGOUT-UBX_NAV_TIMEGLO_UART2	0x2091004e	U1	-	-	0
CFG-MSGOUT-UBX_NAV_TIMEGLO_USB	0x2091004f	U1	-	-	0
CFG-MSGOUT-UBX_NAV_TIMEGPS_I2C	0x20910047	U1	-	-	0
CFG-MSGOUT-UBX_NAV_TIMEGPS_SPI	0x2091004b	U1	-	-	0
CFG-MSGOUT-UBX_NAV_TIMEGPS_UART1	0x20910048	U1	-	-	0
CFG-MSGOUT-UBX_NAV_TIMEGPS_UART2	0x20910049	U1	-	-	0
CFG-MSGOUT-UBX_NAV_TIMEGPS_USB	0x2091004a	U1	-	-	0
CFG-MSGOUT-UBX_NAV_TIMELS_I2C	0x20910060	U1	-	-	0
CFG-MSGOUT-UBX_NAV_TIMELS_SPI	0x20910064	U1	-	-	0
CFG-MSGOUT-UBX_NAV_TIMELS_UART1	0x20910061	U1	-	-	0
CFG-MSGOUT-UBX_NAV_TIMELS_UART2	0x20910062	U1	-	-	0
CFG-MSGOUT-UBX_NAV_TIMELS_USB	0x20910063	U1	-	-	0
CFG-MSGOUT-UBX_NAV_TIMEQZSS_I2C	0x20910386	U1	-	-	0
CFG-MSGOUT-UBX_NAV_TIMEQZSS_SPI	0x2091038a	U1	-	-	0
CFG-MSGOUT-UBX_NAV_TIMEQZSS_UART1	0x20910387	U1	-	-	0
CFG-MSGOUT-UBX_NAV_TIMEQZSS_UART2	0x20910388	U1	-	-	0
CFG-MSGOUT-UBX_NAV_TIMEQZSS_USB	0x20910389	U1	-	-	0
CFG-MSGOUT-UBX_NAV_TIMEUTC_I2C	0x2091005b	U1	-	-	0
CFG-MSGOUT-UBX_NAV_TIMEUTC_SPI	0x2091005f	U1	-	-	0
CFG-MSGOUT-UBX_NAV_TIMEUTC_UART1	0x2091005c	U1	-	-	0
CFG-MSGOUT-UBX_NAV_TIMEUTC_UART2	0x2091005d	U1	-	-	0
CFG-MSGOUT-UBX_NAV_TIMEUTC_USB	0x2091005e	U1	-	-	0
CFG-MSGOUT-UBX_NAV_VELECEF_I2C	0x2091003d	U1	-	-	0
CFG-MSGOUT-UBX_NAV_VELECEF_SPI	0x20910041	U1	-	-	0
CFG-MSGOUT-UBX_NAV_VELECEF_UART1	0x2091003e	U1	-	-	0
CFG-MSGOUT-UBX_NAV_VELECEF_UART2	0x2091003f	U1	-	-	0
CFG-MSGOUT-UBX_NAV_VELECEF_USB	0x20910040	U1	-	-	0
CFG-MSGOUT-UBX_NAV_VELNED_I2C	0x20910042	U1	-	-	0
CFG-MSGOUT-UBX_NAV_VELNED_SPI	0x20910046	U1	-	-	0
CFG-MSGOUT-UBX_NAV_VELNED_UART1	0x20910043	U1	-	-	0
CFG-MSGOUT-UBX_NAV_VELNED_UART2	0x20910044	U1	-	-	0
CFG-MSGOUT-UBX_NAV_VELNED_USB	0x20910045	U1	-	-	0
CFG-MSGOUT-UBX_RXM_MEASX_I2C	0x20910204	U1	-	-	0
CFG-MSGOUT-UBX_RXM_MEASX_SPI	0x20910208	U1	-	-	0
CFG-MSGOUT-UBX_RXM_MEASX_UART1	0x20910205	U1	-	-	0
CFG-MSGOUT-UBX_RXM_MEASX_UART2	0x20910206	U1	-	-	0
CFG-MSGOUT-UBX_RXM_MEASX_USB	0x20910207	U1	-	-	0
CFG-MSGOUT-UBX_RXM_RAWX_I2C	0x209102a4	U1	-	-	0
CFG-MSGOUT-UBX_RXM_RAWX_SPI	0x209102a8	U1	-	-	0

CONFIDENTIAL

Configuration item	Key ID	Type	Scale	Unit	Default value
CFG-MSGOUT-UBX_RXM_RAWX_UART1	0x209102a5	U1	-	-	0
CFG-MSGOUT-UBX_RXM_RAWX_UART2	0x209102a6	U1	-	-	0
CFG-MSGOUT-UBX_RXM_RAWX_USB	0x209102a7	U1	-	-	0
CFG-MSGOUT-UBX_RXM_RLM_I2C	0x2091025e	U1	-	-	0
CFG-MSGOUT-UBX_RXM_RLM_SPI	0x20910262	U1	-	-	0
CFG-MSGOUT-UBX_RXM_RLM_UART1	0x2091025f	U1	-	-	0
CFG-MSGOUT-UBX_RXM_RLM_UART2	0x20910260	U1	-	-	0
CFG-MSGOUT-UBX_RXM_RLM_USB	0x20910261	U1	-	-	0
CFG-MSGOUT-UBX_RXM_RTC5_I2C	0x20910155	U1	-	-	0
CFG-MSGOUT-UBX_RXM_RTC5_SPI	0x20910159	U1	-	-	0
CFG-MSGOUT-UBX_RXM_RTC5_UART1	0x20910156	U1	-	-	0
CFG-MSGOUT-UBX_RXM_RTC5_UART2	0x20910157	U1	-	-	0
CFG-MSGOUT-UBX_RXM_RTC5_USB	0x20910158	U1	-	-	0
CFG-MSGOUT-UBX_RXM_RTCM_I2C	0x20910268	U1	-	-	0
CFG-MSGOUT-UBX_RXM_RTCM_SPI	0x2091026c	U1	-	-	0
CFG-MSGOUT-UBX_RXM_RTCM_UART1	0x20910269	U1	-	-	0
CFG-MSGOUT-UBX_RXM_RTCM_UART2	0x2091026a	U1	-	-	0
CFG-MSGOUT-UBX_RXM_RTCM_USB	0x2091026b	U1	-	-	0
CFG-MSGOUT-UBX_RXM_SFRBX_I2C	0x20910231	U1	-	-	0
CFG-MSGOUT-UBX_RXM_SFRBX_SPI	0x20910235	U1	-	-	0
CFG-MSGOUT-UBX_RXM_SFRBX_UART1	0x20910232	U1	-	-	0
CFG-MSGOUT-UBX_RXM_SFRBX_UART2	0x20910233	U1	-	-	0
CFG-MSGOUT-UBX_RXM_SFRBX_USB	0x20910234	U1	-	-	0
CFG-MSGOUT-UBX_SEC_ECSIGN_I2C	0x2091034a	U1	-	-	0
CFG-MSGOUT-UBX_SEC_ECSIGN_SPI	0x2091034e	U1	-	-	0
CFG-MSGOUT-UBX_SEC_ECSIGN_UART1	0x2091034b	U1	-	-	0
CFG-MSGOUT-UBX_SEC_ECSIGN_UART2	0x2091034c	U1	-	-	0
CFG-MSGOUT-UBX_SEC_ECSIGN_USB	0x2091034d	U1	-	-	0
CFG-MSGOUT-UBX_TIM_TM2_I2C	0x20910178	U1	-	-	0
CFG-MSGOUT-UBX_TIM_TM2_SPI	0x2091017c	U1	-	-	0
CFG-MSGOUT-UBX_TIM_TM2_UART1	0x20910179	U1	-	-	0
CFG-MSGOUT-UBX_TIM_TM2_UART2	0x2091017a	U1	-	-	0
CFG-MSGOUT-UBX_TIM_TM2_USB	0x2091017b	U1	-	-	0
CFG-MSGOUT-UBX_TIM_TP_I2C	0x2091017d	U1	-	-	0
CFG-MSGOUT-UBX_TIM_TP_SPI	0x20910181	U1	-	-	0
CFG-MSGOUT-UBX_TIM_TP_UART1	0x2091017e	U1	-	-	0
CFG-MSGOUT-UBX_TIM_TP_UART2	0x2091017f	U1	-	-	0
CFG-MSGOUT-UBX_TIM_TP_USB	0x20910180	U1	-	-	0
CFG-MSGOUT-UBX_TIM_VRFY_I2C	0x20910092	U1	-	-	0
CFG-MSGOUT-UBX_TIM_VRFY_SPI	0x20910096	U1	-	-	0
CFG-MSGOUT-UBX_TIM_VRFY_UART1	0x20910093	U1	-	-	0

CONFIDENTIAL

Configuration item	Key ID	Type	Scale	Unit	Default value
CFG-MSGOUT-UBX_TIM_VRFY_UART2	0x20910094	U1	-	-	0
CFG-MSGOUT-UBX_TIM_VRFY_USB	0x20910095	U1	-	-	0

Table 81: CFG-MSGOUT configuration defaults

Configuration item	Key ID	Type	Scale	Unit	Default value
CFG-NAVSPG-FIXMODE	0x20110011	E1	-	-	3 (AUTO)
CFG-NAVSPG-INIFIX3D	0x10110013	L	-	-	0 (false)
CFG-NAVSPG-WKNROLLOVER	0x30110017	U2	-	-	2029
CFG-NAVSPG-USE_PPP	0x10110019	L	-	-	0 (false)
CFG-NAVSPG-UTCSTANDARD	0x2011001c	E1	-	-	0 (AUTO)
CFG-NAVSPG-DYNMODEL	0x20110021	E1	-	-	0 (PORT)
CFG-NAVSPG-ACKAIDING	0x10110025	L	-	-	0 (false)
CFG-NAVSPG-USE_USRDAT	0x10110061	L	-	-	0 (false)
CFG-NAVSPG-USRDAT_MAJA	0x50110062	R8	-	m	6378137
CFG-NAVSPG-USRDAT_FLAT	0x50110063	R8	-	-	298.25722356300002502
CFG-NAVSPG-USRDAT_DX	0x40110064	R4	-	m	0
CFG-NAVSPG-USRDAT_DY	0x40110065	R4	-	m	0
CFG-NAVSPG-USRDAT_DZ	0x40110066	R4	-	m	0
CFG-NAVSPG-USRDAT_ROTX	0x40110067	R4	-	arcsec	0
CFG-NAVSPG-USRDAT_ROTY	0x40110068	R4	-	arcsec	0
CFG-NAVSPG-USRDAT_ROTZ	0x40110069	R4	-	arcsec	0
CFG-NAVSPG-USRDAT_SCALE	0x4011006a	R4	-	ppm	0
CFG-NAVSPG-INFIL_MINSVS	0x201100a1	U1	-	-	3
CFG-NAVSPG-INFIL_MAXSVS	0x201100a2	U1	-	-	32
CFG-NAVSPG-INFIL_MINCNO	0x201100a3	U1	-	dBHz	6
CFG-NAVSPG-INFIL_MINELEV	0x201100a4	I1	-	deg	5
CFG-NAVSPG-INFIL_NCNOTHRS	0x201100aa	U1	-	-	0
CFG-NAVSPG-INFIL_CNOTHRS	0x201100ab	U1	-	-	0
CFG-NAVSPG-OUTFIL_PDOP	0x301100b1	U2	0.1	-	250
CFG-NAVSPG-OUTFIL_TDOP	0x301100b2	U2	0.1	-	250
CFG-NAVSPG-OUTFIL_PACC	0x301100b3	U2	-	m	100
CFG-NAVSPG-OUTFIL_TACC	0x301100b4	U2	-	m	350
CFG-NAVSPG-OUTFIL_FACC	0x301100b5	U2	0.01	m/s	150
CFG-NAVSPG-CONSTR_ALT	0x401100c1	I4	0.01	m	0
CFG-NAVSPG-CONSTR_ALTVAR	0x401100c2	U4	0.0001	m^2	10000
CFG-NAVSPG-CONSTR_DGNSSTO	0x201100c4	U1	-	s	60
CFG-NAVSPG-SIGATTCOMP	0x201100d6	E1	-	-	0 (DIS)

Table 82: CFG-NAVSPG configuration defaults

Configuration item	Key ID	Type	Scale	Unit	Default value
CFG-NMEA-PROTVER	0x20930001	E1	-	-	41 (V41)
CFG-NMEA-MAXSVS	0x20930002	E1	-	-	0 (UNLIM)

CONFIDENTIAL

Configuration item	Key ID	Type	Scale	Unit	Default value
CFG-NMEA-COMPAT	0x10930003	L	-	-	0 (false)
CFG-NMEA-CONSIDER	0x10930004	L	-	-	1 (true)
CFG-NMEA-LIMIT82	0x10930005	L	-	-	0 (false)
CFG-NMEA-HIGHPREC	0x10930006	L	-	-	0 (false)
CFG-NMEA-SVNUMBERING	0x20930007	E1	-	-	0 (STRICT)
CFG-NMEA-FILT_GPS	0x10930011	L	-	-	0 (false)
CFG-NMEA-FILT_SBAS	0x10930012	L	-	-	0 (false)
CFG-NMEA-FILT_GAL	0x10930013	L	-	-	0 (false)
CFG-NMEA-FILT_QZSS	0x10930015	L	-	-	0 (false)
CFG-NMEA-FILT_GLO	0x10930016	L	-	-	0 (false)
CFG-NMEA-FILT_BDS	0x10930017	L	-	-	0 (false)
CFG-NMEA-OUT_INVFIX	0x10930021	L	-	-	0 (false)
CFG-NMEA-OUT_MSKFIX	0x10930022	L	-	-	0 (false)
CFG-NMEA-OUT_INVTIME	0x10930023	L	-	-	0 (false)
CFG-NMEA-OUT_INVDATE	0x10930024	L	-	-	0 (false)
CFG-NMEA-OUT_ONLYGPS	0x10930025	L	-	-	0 (false)
CFG-NMEA-OUT_FROZENCOG	0x10930026	L	-	-	0 (false)
CFG-NMEA-MAINTALKERID	0x20930031	E1	-	-	0 (AUTO)
CFG-NMEA-GSVTALKERID	0x20930032	E1	-	-	0 (GNSS)
CFG-NMEA-BDSTALKERID	0x30930033	U2	-	-	0

Table 83: CFG-NMEA configuration defaults

Configuration item	Key ID	Type	Scale	Unit	Default value
CFG-ODO-USE_ODO	0x10220001	L	-	-	0 (false)
CFG-ODO-USE_COG	0x10220002	L	-	-	0 (false)
CFG-ODO-OUTLPVEL	0x10220003	L	-	-	0 (false)
CFG-ODO-OUTLPCOG	0x10220004	L	-	-	0 (false)
CFG-ODO-PROFILE	0x20220005	E1	-	-	0 (RUN)
CFG-ODO-COGMAXSPEED	0x20220021	U1	-	m/s	10
CFG-ODO-COGMAXPOSACC	0x20220022	U1	-	-	50
CFG-ODO-VELLPGAIN	0x20220031	U1	-	-	153
CFG-ODO-COGLPGAIN	0x20220032	U1	-	-	76

Table 84: CFG-ODO configuration defaults

Configuration item	Key ID	Type	Scale	Unit	Default value
CFG-PM-OPERATEMODE	0x20d00001	E1	-	-	0 (FULL)
CFG-PM-POSUPDATEPERIOD	0x40d00002	U4	-	s	10
CFG-PM-ACQPERIOD	0x40d00003	U4	-	s	10
CFG-PM-GRIDOFFSET	0x40d00004	U4	-	s	0
CFG-PM-ONTIME	0x30d00005	U2	-	s	0
CFG-PM-MINACQTIME	0x20d00006	U1	-	s	0
CFG-PM-MAXACQTIME	0x20d00007	U1	-	s	0

CONFIDENTIAL

Configuration item	Key ID	Type	Scale	Unit	Default value
CFG-PM-DONOTENTEROFF	0x10d00008	L	-	-	0 (false)
CFG-PM-WAITTIMEFIX	0x10d00009	L	-	-	0 (false)
CFG-PM-UPDATEEPH	0x10d0000a	L	-	-	1 (true)
CFG-PM-EXTINTSEL	0x20d0000b	E1	-	-	0 (EXTINT0)
CFG-PM-EXTINTWAKE	0x10d0000c	L	-	-	0 (false)
CFG-PM-EXTINTBACKUP	0x10d0000d	L	-	-	0 (false)
CFG-PM-EXTINTINACTIVE	0x10d0000e	L	-	-	0 (false)
CFG-PM-EXTINTINACTIVITY	0x40d0000f	U4	0.001	s	0
CFG-PM-LIMITPEAKCURR	0x10d00010	L	-	-	0 (false)

Table 85: CFG-PM configuration defaults

Configuration item	Key ID	Type	Scale	Unit	Default value
CFG-QZSS-USE_SLAS_DGNSS	0x10370005	L	-	-	1 (true)
CFG-QZSS-USE_SLAS_TESTMODE	0x10370006	L	-	-	0 (false)
CFG-QZSS-USE_SLAS_RAIM_UNCORR	0x10370007	L	-	-	0 (false)

Table 86: CFG-QZSS configuration defaults

Configuration item	Key ID	Type	Scale	Unit	Default value
CFG-RATE-MEAS	0x30210001	U2	0.001	s	1000
CFG-RATE-NAV	0x30210002	U2	-	-	1
CFG-RATE-TIMEREF	0x20210003	E1	-	-	1 (GPS)

Table 87: CFG-RATE configuration defaults

Configuration item	Key ID	Type	Scale	Unit	Default value
CFG-RINV-DUMP	0x10c70001	L	-	-	0 (false)
CFG-RINV-BINARY	0x10c70002	L	-	-	0 (false)
CFG-RINV-DATA_SIZE	0x20c70003	U1	-	-	22
CFG-RINV-CHUNK0	0x50c70004	X8	-	-	0x203a656369746f4e ("Notice: ")
CFG-RINV-CHUNK1	0x50c70005	X8	-	-	0x2061746164206f6e ("no data ")
CFG-RINV-CHUNK2	0x50c70006	X8	-	-	0x0000216465766173 ("saved!\0\0")
CFG-RINV-CHUNK3	0x50c70007	X8	-	-	0x0000000000000000

Table 88: CFG-RINV configuration defaults

Configuration item	Key ID	Type	Scale	Unit	Default value
CFG-SBAS-USE_TESTMODE	0x10360002	L	-	-	0 (false)
CFG-SBAS-USE_RANGING	0x10360003	L	-	-	1 (true)
CFG-SBAS-USE_DIFFCORR	0x10360004	L	-	-	1 (true)
CFG-SBAS-USE_INTEGRITY	0x10360005	L	-	-	0 (false)
CFG-SBAS-PRNSCANMASK	0x50360006	X8	-	-	0x0000000000072b88 (ALL | PRN123 | PRN127 | PRN128 | PRN129 | PRN131 | PRN133 | PRN136 | PRN137 | PRN138)

Table 89: CFG-SBAS configuration defaults

CONFIDENTIAL

Configuration item	Key ID	Type	Scale	Unit	Default value
CFG-SEC-ECCFGSESSIONID0	0x50f60006	U8	-	-	0
CFG-SEC-ECCFGSESSIONID1	0x50f60007	U8	-	-	0
CFG-SEC-ECCFGSESSIONID2	0x50f60008	U8	-	-	0

Table 90: CFG-SEC configuration defaults

Configuration item	Key ID	Type	Scale	Unit	Default value
CFG-SIGNAL-GPS_ENA	0x1031001f	L	-	-	1 (true)
CFG-SIGNAL-GPS_L1CA_ENA	0x10310001	L	-	-	1 (true)
CFG-SIGNAL-SBAS_ENA	0x10310020	L	-	-	1 (true)
CFG-SIGNAL-SBAS_L1CA_ENA	0x10310005	L	-	-	1 (true)
CFG-SIGNAL-GAL_ENA	0x10310021	L	-	-	1 (true)
CFG-SIGNAL-GAL_E1_ENA	0x10310007	L	-	-	1 (true)
CFG-SIGNAL-BDS_ENA	0x10310022	L	-	-	1 (true)
CFG-SIGNAL-BDS_B1_ENA	0x1031000d	L	-	-	1 (true)
CFG-SIGNAL-QZSS_ENA	0x10310024	L	-	-	1 (true)
CFG-SIGNAL-QZSS_L1CA_ENA	0x10310012	L	-	-	1 (true)
CFG-SIGNAL-GLO_ENA	0x10310025	L	-	-	1 (true)
CFG-SIGNAL-GLO_L1_ENA	0x10310018	L	-	-	1 (true)

Table 91: CFG-SIGNAL configuration defaults

Configuration item	Key ID	Type	Scale	Unit	Default value
CFG-SPI-MAXFF	0x20640001	U1	-	-	50
CFG-SPI-CPOLARITY	0x10640002	L	-	-	0 (false)
CFG-SPI-CPHASE	0x10640003	L	-	-	0 (false)
CFG-SPI-EXTENDEDTIMEOUT	0x10640005	L	-	-	0 (false)
CFG-SPI-ENABLED	0x10640006	L	-	-	0 (false)

Table 92: CFG-SPI configuration defaults

Configuration item	Key ID	Type	Scale	Unit	Default value
CFG-SPIINPROT-UBX	0x10790001	L	-	-	1 (true)
CFG-SPIINPROT-NMEA	0x10790002	L	-	-	1 (true)
CFG-SPIINPROT-RTCM3X	0x10790004	L	-	-	1 (true)

Table 93: CFG-SPIINPROT configuration defaults

Configuration item	Key ID	Type	Scale	Unit	Default value
CFG-SPIOUTPROT-UBX	0x107a0001	L	-	-	1 (true)
CFG-SPIOUTPROT-NMEA	0x107a0002	L	-	-	1 (true)

Table 94: CFG-SPIOUTPROT configuration defaults

Configuration item	Key ID	Type	Scale	Unit	Default value
CFG-TP-PULSE_DEF	0x20050023	E1	-	-	0 (PERIOD)
CFG-TP-PULSE_LENGTH_DEF	0x20050030	E1	-	-	1 (LENGTH)
CFG-TP-ANT_CABLEDELAY	0x30050001	I2	0.000000001	s	50
CFG-TP-PERIOD_TP1	0x40050002	U4	0.000001	s	1000000

CONFIDENTIAL

Configuration item	Key ID	Type	Scale	Unit	Default value
CFG-TP-PERIOD_LOCK_TP1	0x40050003	U4	0.000001	s	1000000
CFG-TP-FREQ_TP1	0x40050024	U4	-	Hz	1
CFG-TP-FREQ_LOCK_TP1	0x40050025	U4	-	Hz	1
CFG-TP-LEN_TP1	0x40050004	U4	0.000001	s	0
CFG-TP-LEN_LOCK_TP1	0x40050005	U4	0.000001	s	100000
CFG-TP-DUTY_TP1	0x5005002a	R8	-	%	0
CFG-TP-DUTY_LOCK_TP1	0x5005002b	R8	-	%	10
CFG-TP-USER_DELAY_TP1	0x40050006	I4	0.000000001	s	0
CFG-TP-TP1_ENA	0x10050007	L	-	-	1 (true)
CFG-TP-SYNC_GNSS_TP1	0x10050008	L	-	-	1 (true)
CFG-TP-USE_LOCKED_TP1	0x10050009	L	-	-	1 (true)
CFG-TP-ALIGN_TO_TOW_TP1	0x1005000a	L	-	-	1 (true)
CFG-TP-POL_TP1	0x1005000b	L	-	-	1 (true)
CFG-TP-TIMEGRID_TP1	0x2005000c	E1	-	-	0 (UTC)
CFG-TP-PERIOD_TP2	0x4005000d	U4	0.000001	s	1000000
CFG-TP-PERIOD_LOCK_TP2	0x4005000e	U4	0.000001	s	1000000
CFG-TP-FREQ_TP2	0x40050026	U4	-	Hz	1
CFG-TP-FREQ_LOCK_TP2	0x40050027	U4	-	Hz	1
CFG-TP-LEN_TP2	0x4005000f	U4	0.000001	s	0
CFG-TP-LEN_LOCK_TP2	0x40050010	U4	0.000001	s	100000
CFG-TP-DUTY_TP2	0x5005002c	R8	-	%	0
CFG-TP-DUTY_LOCK_TP2	0x5005002d	R8	-	%	10
CFG-TP-USER_DELAY_TP2	0x40050011	I4	0.000000001	s	0
CFG-TP-TP2_ENA	0x10050012	L	-	-	0 (false)
CFG-TP-SYNC_GNSS_TP2	0x10050013	L	-	-	1 (true)
CFG-TP-USE_LOCKED_TP2	0x10050014	L	-	-	1 (true)
CFG-TP-ALIGN_TO_TOW_TP2	0x10050015	L	-	-	1 (true)
CFG-TP-POL_TP2	0x10050016	L	-	-	1 (true)
CFG-TP-TIMEGRID_TP2	0x20050017	E1	-	-	0 (UTC)

Table 95: CFG-TP configuration defaults

Configuration item	Key ID	Type	Scale	Unit	Default value
CFG-TXREADY-ENABLED	0x10a20001	L	-	-	0 (false)
CFG-TXREADY-POLARITY	0x10a20002	L	-	-	0 (false)
CFG-TXREADY-PIN	0x20a20003	U1	-	-	0
CFG-TXREADY-THRESHOLD	0x30a20004	U2	-	-	0
CFG-TXREADY-INTERFACE	0x20a20005	E1	-	-	0 (I2C)

Table 96: CFG-TXREADY configuration defaults

Configuration item	Key ID	Type	Scale	Unit	Default value
CFG-UART1-BAUDRATE	0x40520001	U4	-	-	38400
CFG-UART1-STOPBITS	0x20520002	E1	-	-	1 (ONE)

CONFIDENTIAL

Configuration item	Key ID	Type	Scale	Unit	Default value
CFG-UART1-DATABITS	0x20520003	E1	-	-	0 (EIGHT)
CFG-UART1-PARITY	0x20520004	E1	-	-	0 (NONE)
CFG-UART1-ENABLED	0x10520005	L	-	-	1 (true)
CFG-UART1-REMAP	0x10520006	L	-	-	0 (false)

Table 97: CFG-UART1 configuration defaults

Configuration item	Key ID	Type	Scale	Unit	Default value
CFG-UART1INPROT-UBX	0x10730001	L	-	-	1 (true)
CFG-UART1INPROT-NMEA	0x10730002	L	-	-	1 (true)
CFG-UART1INPROT-RTCM3X	0x10730004	L	-	-	1 (true)

Table 98: CFG-UART1INPROT configuration defaults

Configuration item	Key ID	Type	Scale	Unit	Default value
CFG-UART1OUTPROT-UBX	0x10740001	L	-	-	1 (true)
CFG-UART1OUTPROT-NMEA	0x10740002	L	-	-	1 (true)

Table 99: CFG-UART1OUTPROT configuration defaults

Configuration item	Key ID	Type	Scale	Unit	Default value
CFG-UART2-BAUDRATE	0x40530001	U4	-	-	38400
CFG-UART2-STOPBITS	0x20530002	E1	-	-	1 (ONE)
CFG-UART2-DATABITS	0x20530003	E1	-	-	0 (EIGHT)
CFG-UART2-PARITY	0x20530004	E1	-	-	0 (NONE)
CFG-UART2-ENABLED	0x10530005	L	-	-	1 (true)
CFG-UART2-REMAP	0x10530006	L	-	-	0 (false)

Table 100: CFG-UART2 configuration defaults

Configuration item	Key ID	Type	Scale	Unit	Default value
CFG-UART2INPROT-UBX	0x10750001	L	-	-	1 (true)
CFG-UART2INPROT-NMEA	0x10750002	L	-	-	1 (true)
CFG-UART2INPROT-RTCM3X	0x10750004	L	-	-	1 (true)

Table 101: CFG-UART2INPROT configuration defaults

Configuration item	Key ID	Type	Scale	Unit	Default value
CFG-UART2OUTPROT-UBX	0x10760001	L	-	-	0 (false)
CFG-UART2OUTPROT-NMEA	0x10760002	L	-	-	0 (false)

Table 102: CFG-UART2OUTPROT configuration defaults

Configuration item	Key ID	Type	Scale	Unit	Default value
CFG-USB-ENABLED	0x10650001	L	-	-	1 (true)
CFG-USB-SELFPOW	0x10650002	L	-	-	1 (true)
CFG-USB-VENDOR_ID	0x3065000a	U2	-	-	5446
CFG-USB-PRODUCT_ID	0x3065000b	U2	-	-	425
CFG-USB-POWER	0x3065000c	U2	-	mA	0
CFG-USB-VENDOR_STR0	0x5065000d	X8	-	-	0x4120786f6c622d75 ("u-blox A")

CONFIDENTIAL

Configuration item	Key ID	Type	Scale	Unit	Default value
CFG-USB-VENDOR_STR1	0x5065000e	X8	-	-	0x2e777777202d2047 ("G - www.")
CFG-USB-VENDOR_STR2	0x5065000f	X8	-	-	0x632e786f6c622d75 ("u-blox.c")
CFG-USB-VENDOR_STR3	0x50650010	X8	-	-	0x0000000000006d6f ("om\0\0\0\0\0\0")
CFG-USB-PRODUCT_STR0	0x50650011	X8	-	-	0x4720786f6c622d75 ("u-blox G")
CFG-USB-PRODUCT_STR1	0x50650012	X8	-	-	0x656365722053534e ("NSS rece")
CFG-USB-PRODUCT_STR2	0x50650013	X8	-	-	0x0000000072657669 ("iver\0\0\0\0")
CFG-USB-PRODUCT_STR3	0x50650014	X8	-	-	0x0000000000000000
CFG-USB-SERIAL_NO_STR0	0x50650015	X8	-	-	0x0000000000000000
CFG-USB-SERIAL_NO_STR1	0x50650016	X8	-	-	0x0000000000000000
CFG-USB-SERIAL_NO_STR2	0x50650017	X8	-	-	0x0000000000000000
CFG-USB-SERIAL_NO_STR3	0x50650018	X8	-	-	0x0000000000000000

Table 103: CFG-USB configuration defaults

Configuration item	Key ID	Type	Scale	Unit	Default value
CFG-USBINPROT-UBX	0x10770001	L	-	-	1 (true)
CFG-USBINPROT-NMEA	0x10770002	L	-	-	1 (true)
CFG-USBINPROT-RTCM3X	0x10770004	L	-	-	1 (true)

Table 104: CFG-USBINPROT configuration defaults

Configuration item	Key ID	Type	Scale	Unit	Default value
CFG-USBOUTPROT-UBX	0x10780001	L	-	-	1 (true)
CFG-USBOUTPROT-NMEA	0x10780002	L	-	-	1 (true)

Table 105: CFG-USBOUTPROT configuration defaults

CONFIDENTIAL

Related documents

[1] UBX-M9140-KB Data sheet, doc. no. UBX-18020412
[2] UBX-M9140-KB Integration manual, doc. no. UBX-18020542
[3] NMEA 0183 Standard for Interfacing Marine Electronic Devices, Version 4.10, June, 2012

☞ For regular updates to u-blox documentation and to receive product change notifications please register on our homepage (https://www.u-blox.com).

CONFIDENTIAL

Revision history

Revision	Date	Name	Status / Comments
R01	12-Dec-2019	jesk	Advance information – confidential

CONFIDENTIAL

Contact

For complete contact information visit us at www.u-blox.com.

u-blox Offices

North, Central and South America

u-blox America, Inc.
Phone: +1 703 483 3180
E-mail: info_us@u-blox.com

Regional Office West Coast
Phone: +1 408 573 3640
E-mail: info_us@u-blox.com

Technical Support
Phone: +1 703 483 3185
E-mail: support_us@u-blox.com

Headquarters

Europe, Middle East, Africa

u-blox AG
Phone: +41 44 722 74 44
E-mail: info@u-blox.com
Support: support@u-blox.com

Asia, Australia, Pacific

u-blox Singapore Pte. Ltd.
Phone: +65 6734 3811
E-mail: info_ap@u-blox.com
Support: support_ap@u-blox.com

Regional Office Australia
Phone: +61 2 8448 2016
E-mail: info_anz@u-blox.com
Support: support_ap@u-blox.com

Regional Office China (Beijing)
Phone: +86 10 68 133 545
E-mail: info_cn@u-blox.com
Support: support_cn@u-blox.com

Regional Office China (Chongqing)
Phone: +86 23 6815 1588
E-mail: info_cn@u-blox.com
Support: support_cn@u-blox.com

Regional Office China (Shanghai)
Phone: +86 21 6090 4832
E-mail: info_cn@u-blox.com
Support: support_cn@u-blox.com

Regional Office China (Shenzhen)
Phone: +86 755 8627 1083
E-mail: info_cn@u-blox.com
Support: support_cn@u-blox.com

Regional Office India
Phone: +91 80 4050 9200
E-mail: info_in@u-blox.com
Support: support_in@u-blox.com

Regional Office Japan (Osaka)
Phone: +81 6 6941 3660
E-mail: info_jp@u-blox.com
Support: support_jp@u-blox.com

Regional Office Japan (Tokyo)
Phone: +81 3 5775 3850
E-mail: info_jp@u-blox.com
Support: support_jp@u-blox.com

Regional Office Korea
Phone: +82 2 542 0861
E-mail: info_kr@u-blox.com
Support: support_kr@u-blox.com

Regional Office Taiwan
Phone: +886 2 2657 1090
E-mail: info_tw@u-blox.com
Support: support_tw@u-blox.com

CONFIDENTIAL