An Introduction to Python

Joinal Ahmed
Tutor, Python Express
Contributor KDE, Mozilla, PSF , Fedora
Developer and Engineer

joinalahmed@gmail.com
September 15, 2017

DISCLAIMER
I'm also Learning

What is python...

Python is a high-level, interpreted, interactive and object-oriented scripting language. Python is designed to be highly readable..

Environment

```
ubuntu@ubuntu: ~
ubuntu@ubuntu:~$ python
Python 2.7.5 (default, Dec 13 2013, 13:14:25)
[GCC 4.6.3] on linux2
Type "help", "copyright", "credits" or "license" for more information.
>>>
```

Variable Types

- Numbers
- String
- List
- Tuple
- Dictionary

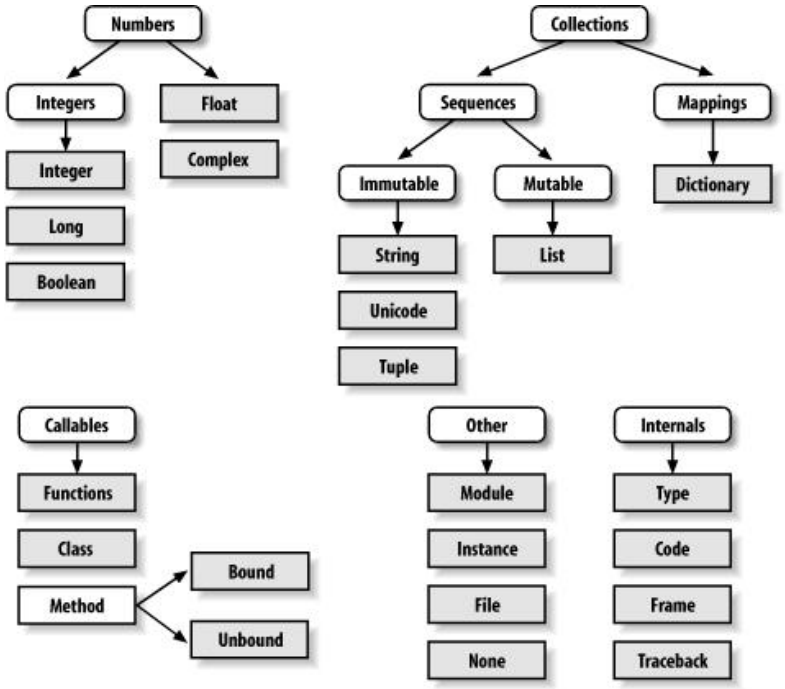

Numbers

- Number data types store numeric values.
- They are immutable data types, means that changing the value of a number data type results in a newly allocated object.

Strings

- Strings are among the most popular types in Python.
- We can create them simply by enclosing characters in quotes.
- Python treats single quotes the same as double quotes.

```
#!/usr/bin/python

str = 'Hello World!'

print str          # Prints complete string
print str[0]       # Prints first character of the string
print str[2:5]     # Prints characters starting from 3rd to 5th
print str[2:]      # Prints string starting from 3rd character
print str * 2      # Prints string two times
print str + "TEST" # Prints concatenated string
```

This will produce the following result –

```
Hello World!
H
llo
llo World!
Hello World!Hello World!
Hello World!TEST
```

Lists

- The most basic data structure in Python is the sequence.
- Each element of a sequence is assigned a number - its position or index.
- The first index is zero, the second index is one, and so forth.

```
#!/usr/bin/python

list = [ 'abcd', 786 , 2.23, 'john', 70.2 ]
tinylist = [123, 'john']

print list          # Prints complete list
print list[0]       # Prints first element of the list
print list[1:3]     # Prints elements starting from 2nd till 3rd
print list[2:]      # Prints elements starting from 3rd element
print tinylist * 2  # Prints list two times
print list + tinylist # Prints concatenated lists
```

This produce the following result –

```
['abcd', 786, 2.23, 'john', 70.200000000000003]
abcd
[786, 2.23]
[2.23, 'john', 70.200000000000003]
[123, 'john', 123, 'john']
['abcd', 786, 2.23, 'john', 70.200000000000003, 123, 'john']
```

Tuples

- A tuple is a sequence of immutable Python objects.
- Tuples are sequences, just like lists.
- The differences between tuples and lists are:
  - the tuples cannot be changed unlike lists
  - tuples use parentheses, whereas lists use square brackets.

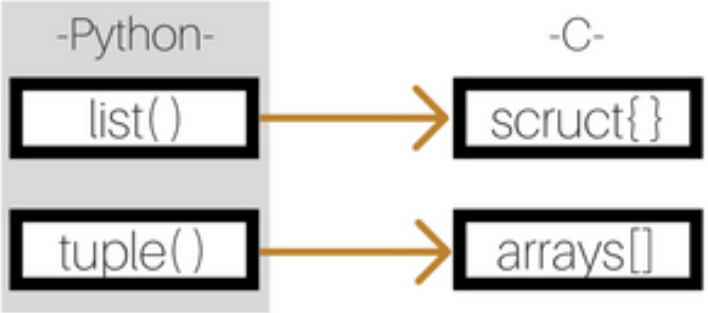


```
tuple = ( 'abcd', 786 , 2.23, 'john', 70.2  )
tinytuple = (123, 'john')

print tuple           # Prints complete list
print tuple[0]        # Prints first element of the list
print tuple[1:3]      # Prints elements starting from 2nd till 3rd
print tuple[2:]       # Prints elements starting from 3rd element
print tinytuple * 2   # Prints list two times
print tuple + tinytuple # Prints concatenated lists
```

This produce the following result –

```
('abcd', 786, 2.23, 'john', 70.200000000000003)
abcd
(786, 2.23)
(2.23, 'john', 70.200000000000003)
(123, 'john', 123, 'john')
('abcd', 786, 2.23, 'john', 70.200000000000003, 123, 'john')
```

Dictionary

- Each key is separated from its value by a colon (:)
- The items are separated by commas
- The whole thing is enclosed in curly braces.

```
dict = {}
dict['one'] = "This is one"
dict[2]     = "This is two"

tinydict = {'name': 'john','code':6734, 'dept': 'sales'}


print dict['one']       # Prints value for 'one' key
print dict[2]           # Prints value for 2 key
print tinydict          # Prints complete dictionary
print tinydict.keys()   # Prints all the keys
print tinydict.values() # Prints all the values
```

This produce the following result –

```
This is one
This is two
{'dept': 'sales', 'code': 6734, 'name': 'john'}
['dept', 'code', 'name']
['sales', 6734, 'john']
```

Flow Control

- If-Then-Else
- For
- While
- Exceptions

Functions

- Function blocks begin with the keyword def, followed by the function name and parentheses.
- Any input parameters or arguments should be placed within these parentheses.
- The first statement of a function can be an optional statement - the documentation string of the function or docstring.

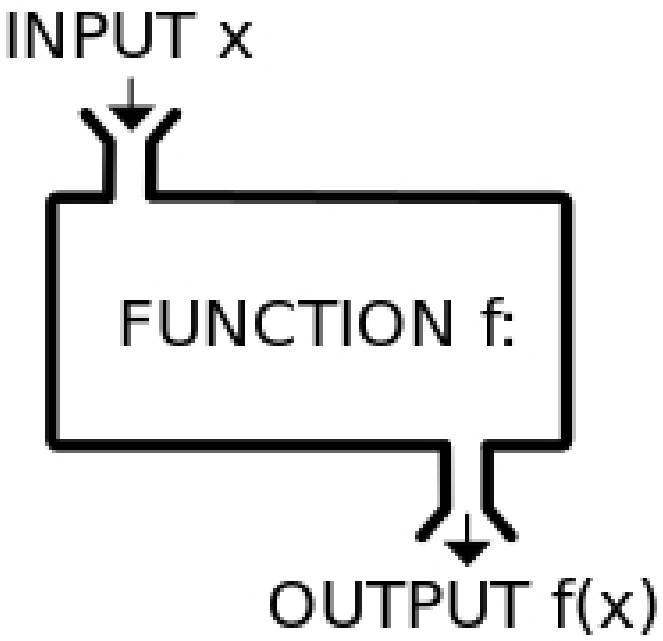

Functions

```
def square(x):
    return x * x
```

```
def hello():
    return "Hello"
```

```
def printme( statement ):
    "This prints a passed string into this function"
    print statement
    return
```

Lambda

- Python supports simple anonymous functions through the lambda form.
- The executable body of the lambda must be an expression and can't be a statement, which is a restriction that limits its utility.

```
foo = lambda x: x * x
```

Classes

- The class statement creates a new class definition.
- The name of the class immediately follows the keyword class followed by a colon as follows

Classes

```
class Employee:
    """
    Common base class for all employees
    """
    empCount = 0

    def __init__(self, name, salary):
        self.name = name
        self.salary = salary
        Employee.empCount += 1

    def displayCount(self):
        print "Total Employee %d" % Employee.empCount

    def displayEmployee(self):
        print "Name : ", self.name,  ", Salary: ", self.salary
```

```
emp1 = Employee("Zara", 2000)
```

Garbage Collection

- Python deletes unneeded objects automatically to free the memory space.

Inheritance

- Instead of starting from scratch, you can create a class by deriving it from a preexisting class by listing the parent class in parentheses after the new class name.

Inheritance

```
class SubClassName (ParentClass1[, ParentClass2, ...]):
    """
    Optional class documentation string
    """
    # class_suite
```

Data Hiding

- An object's attributes may or may not be visible outside the class definition.
- You need to name attributes with a double underscore prefix, and those attributes then are not be directly visible to outsiders.
- Python protects those members by internally changing the name to include the class name.
- You can access such attributes as object.__className__attrName

Data Hiding

```
#!/usr/bin/python

class JustCounter:
    __secretCount = 0

    def count(self):
        self.__secretCount += 1
        print self.__secretCount

counter = JustCounter()
counter.count()
counter.count()
print counter.__secretCount
```

Data Hiding

```
1
2
Traceback (most recent call last):
File "test.py", line 12, in <module>
print counter.__secretCount
AttributeError: JustCounter instance has no attribute '__secretCount'
```

What is a metaclass in Python?

- A metaclass is the class of a class
- Like a class defines how an instance of the class behaves, a metaclass defines how a class behaves.
- A class is an instance of a metaclass.

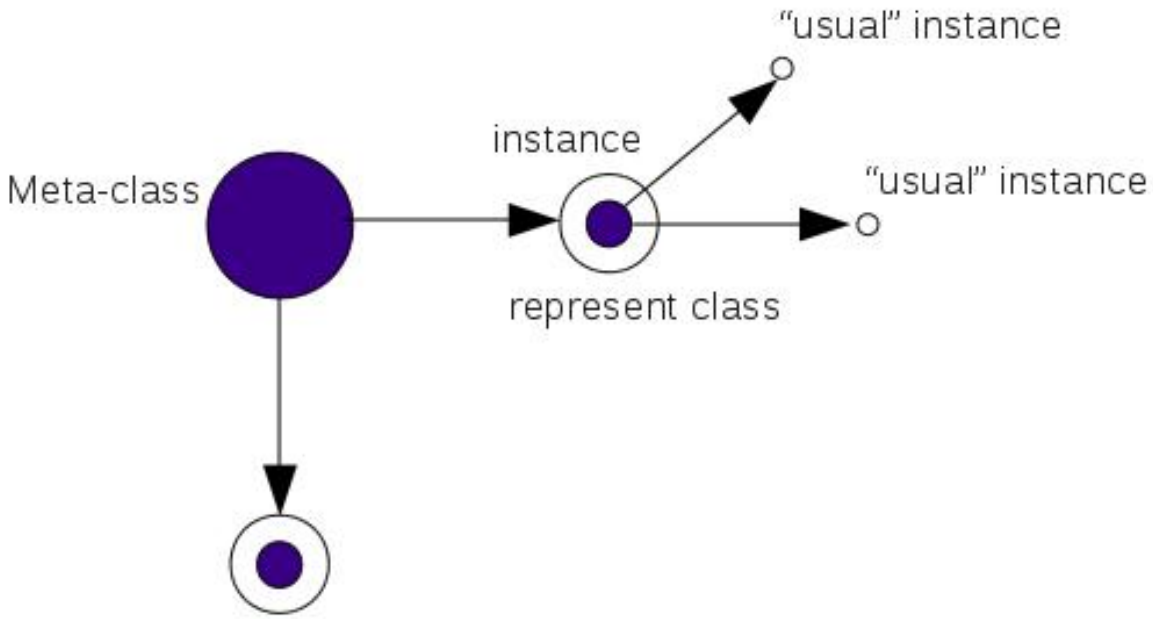

Multiple Inheritance

- Method Resolution Order (MRO)
- C3 Algorithm

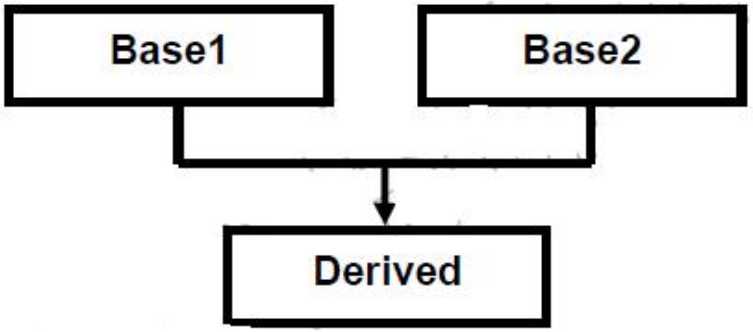

C3 linearization

- The C3 superclass linearization is an algorithm used primarily to obtain the order in which methods should be inherited (the "linearization") in the presence of multiple inheritance, and is often termed "MRO" for Method Resolution Order.

C3 Algorithm

```
class O
class A extends O
class B extends O
class C extends O
class D extends O
class E extends O
class K1 extends A, B, C
class K2 extends D, B, E
class K3 extends D, A
class Z extends K1, K2, K3
```

C3 Algorithm

```
L(O)  := [O]

L(A)  := [A] + merge(L(O), [O])
= [A] + merge([O], [O])
= [A, O]

L(B)  := [B, O]
L(C)  := [C, O]
L(D)  := [D, O]
L(E)  := [E, O]

L(K1) := [K1] + merge(L(A), L(B), L(C), [A, B, C])
= [K1] + merge([A, O], [B, O], [C, O], [A, B, C])
= [K1, A] + merge([O], [B, O], [C, O], [B, C])
= [K1, A, B] + merge([O], [O], [C, O], [C])
= [K1, A, B, C] + merge([O], [O], [O])
= [K1, A, B, C, O]
```

C3 Algorithm

```
L(K2) := [K2] + merge(L(D), L(B), L(E), [D, B, E])
= [K2] + merge([D, O], [B, O], [E, O], [D, B, E])
= [K2, D] + merge([O], [B, O], [E, O], [B, E])
= [K2, D, B] + merge([O], [O], [E, O], [E])
= [K2, D, B, E] + merge([O], [O], [O])
= [K2, D, B, E, O]

L(K3) := [K3] + merge(L(D), L(A), [D, A])
= [K3] + merge([D, O], [A, O], [D, A])
= [K3, D] + merge([O], [A, O], [A])
= [K3, D, A] + merge([O], [O])
= [K3, D, A, O]
```

C3 Algorithm

```
L(Z)  := [Z] + merge(L(K1), L(K2), L(K3), [K1, K2, K3])
= [Z] + merge([K1, A, B, C, O], [K2, D, B, E, O], [K3, D, A, O], [K1, K2, K3])
= [Z, K1] + merge([A, B, C, O], [K2, D, B, E, O], [K3, D, A, O], [K2, K3])
= [Z, K1, K2] + merge([A, B, C, O], [D, B, E, O], [K3, D, A, O], [K3])
= [Z, K1, K2, K3] + merge([A, B, C, O], [D, B, E, O], [D, A, O])
= [Z, K1, K2, K3, D] + merge([A, B, C, O], [B, E, O], [A, O])
= [Z, K1, K2, K3, D, A] + merge([B, C, O], [B, E, O], [O])
= [Z, K1, K2, K3, D, A, B] + merge([C, O], [E, O], [O])
= [Z, K1, K2, K3, D, A, B, C] + merge([O], [E, O], [O])
= [Z, K1, K2, K3, D, A, B, C, E] + merge([O], [O], [O])
= [Z, K1, K2, K3, D, A, B, C, E, O]
```

Class method differences in Python

- Bound, unbound and static
- Basically, a call to a member function a bound function is translated to a call to an unbound method.

```
class Test(object):
    def method_one(self):
        print "Called method_one"

a_test = Test()

a_test.method_one()
# is translated to
Test.method_one(a_test)
```

Class method differences in Python

- The @staticmethod tells the built-in default metaclass type (the class of a class) to not create bound methods for method_two.

```
class Test(object):
    @staticmethod
    def method_two():
        print "Called method two"

a_test = Test()
a_test.method_two()
# is translated to
Test.method_two()
```

Questions?