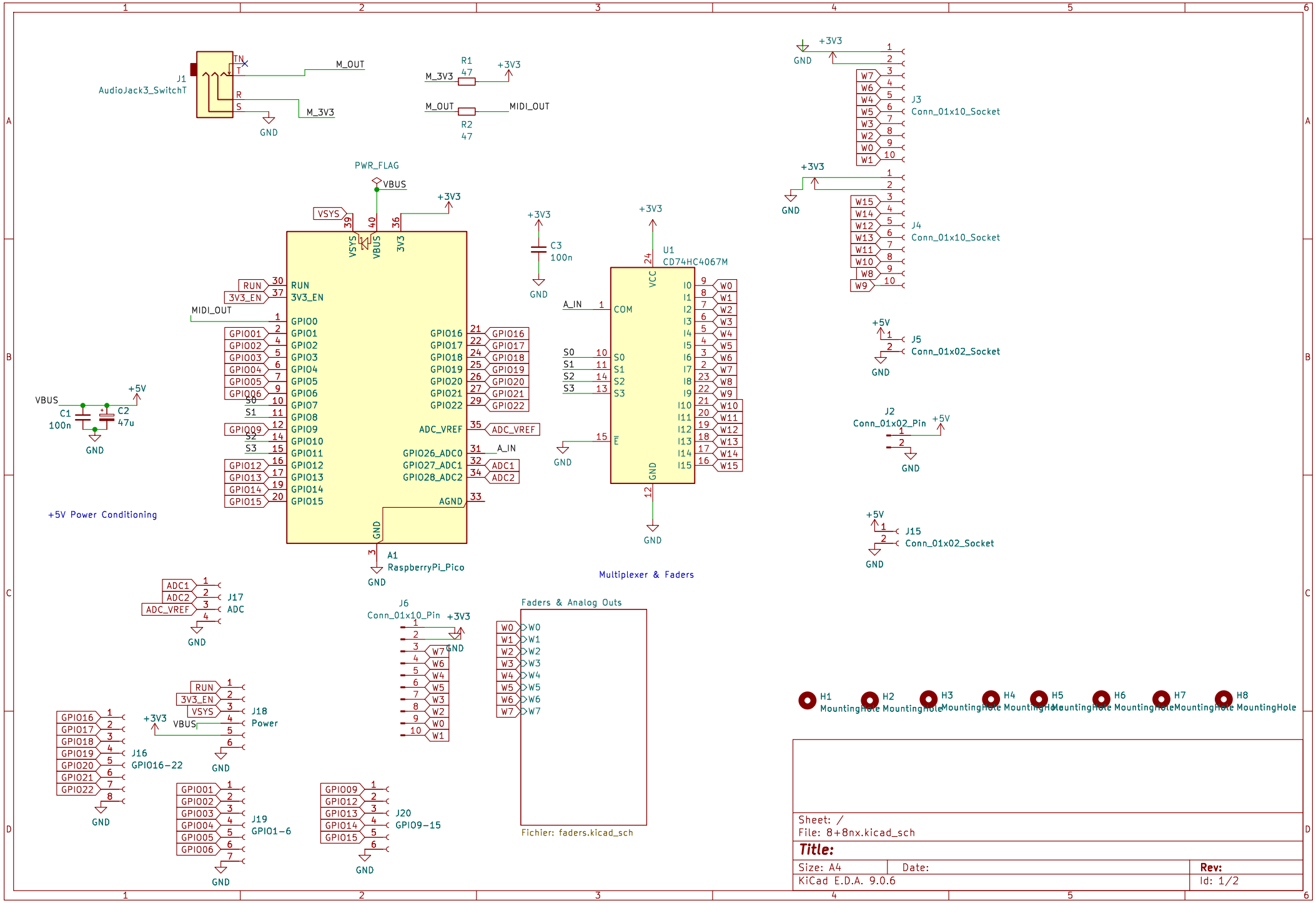

Sheet: /
File: 8+8nx.kicad_sch

Title:

Size: A4	Date:	Rev:
KiCad E.D.A. 9.0.6		Id: 1/2

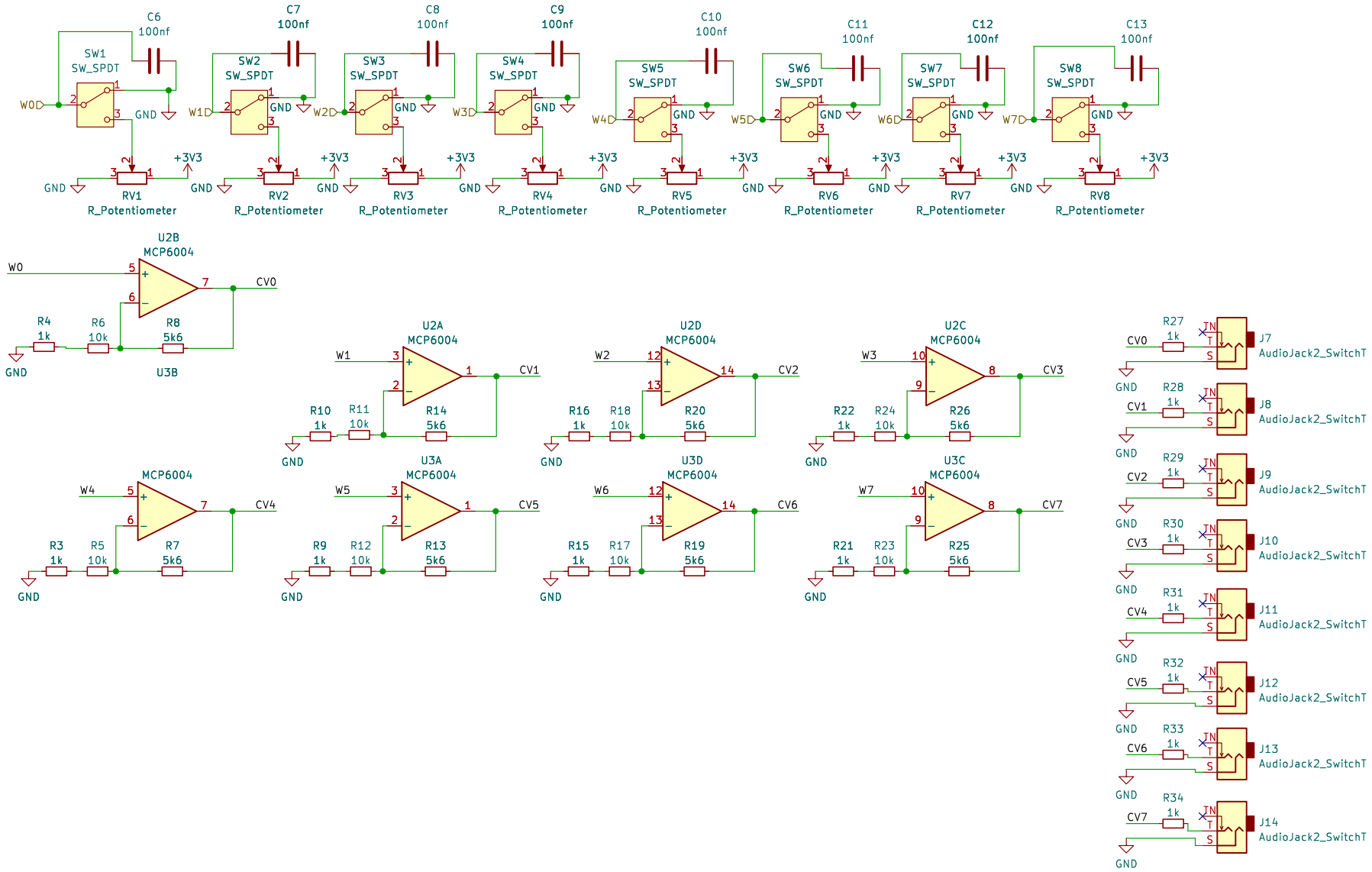

Sheet: /Faders & Analog Outs/
File: faders.kicad_sch

Title:

Size: A4	Date:	Rev:
KiCad E.D.A. 9.0.6		Id: 2/2