MRI-Compatible Dynamometer

University of Illinois Urbana-Champaign

Spring 2025 ME 470 – Final Report

Name	Email	Phone Number
Kaiden Morfey	kmorfey2@illinois.edu	(217)-493-1303
Daniel Feutz	dfeutz2@illinois.edu	(630)-352-9255
Matthew Currey	mcurr5@illinois.edu	(217)-840-5876
Jordan Exline	jexline2@illinois.edu	(708)-759-1234
Brandon Bui	bbui@illinois.edu	(217)-766-8415
Jagriti Jain	jsjain2@illinois.edu	(330)-391-4714

8 May 2025

Project Sponsors: Dr. Mariana Kersh (mkersh@illinois.edu)

and Dr. Bruce Damon (bdamon@illinois.edu)

Submitted to: Professor Blake Johnson

(bejohnso@illinois.edu)

Table of Contents

1. Executive Summary 3

2. Introduction 3

2.1 Background 3

2.2 Problem Statement 4

2.3 Project Goals and Deliverables 5

2.4 Literature Review 6

2.5 Project Constraints and Standards 7

2.6 Project Design Specifications and Ideation 9

2.7 Unavailable/Discarded Solutions 11

3. Overview 12

3.1 Knee Mechanism 12

3.2 Transmission 13

3.3 Force Sensor 14

3.4 Angle Sensor 15

3.5 Spatial Context 15

4. Design/Iteration 17

4.1 Knee Mechanism 17

4.2 Transmission 21

4.3 Force Sensor 25

4.4 Angle Sensor 28

4.5 Sensing Circuit 32

5. Manufacturing 34

6. Testing 35

6.1 Force Sensor Testing 35

6.2 Angle Sensor Testing 38

6.3 Apparatus Testing 38

7. Next Steps / Project Handoff 39

8. Budget 39

9. Conclusion and Recommendations 40

Acknowledgements *42*
References *42*
Appendix A: Contributions Table *45*
Appendix B: Governing Equations *46*
Appendix C: Tables for Detailed Bill of Materials and Gear Selections *46*
Appendix D: Project Handoff CAD Drawings *49*
Appendix E: Decision Matrix Tables for Components *67*
Appendix F: Sensing Arduino Code *71*
Appendix G: Sensing MATLAB Code *75*

1. Executive Summary

As a person ages, experiences injury or complicated genetic diseases such as muscular dystrophy, the tissues surrounding the knee may deteriorate or change. There are currently no conventional methods to measure the force that the knee exerts in extension alongside angle of flexion while simultaneously being observed by magnetic resonance imaging (MRI). Multiple constraints are the root cause, primarily material and size. The MRI Dynamometer project aims to help researchers to investigate the musculoskeletal region surrounding the leg by delivering a device that is able to integrate imaging along with force and angle data while meeting the constraints from the MRI.

The design consists of four main components: the knee mechanism, transmission system, force sensor, and angle sensor. It is capable of measurement under various conditions including static or dynamic contraction at any point in time. The entire device fits inside the 3-Tesla MRI bore and the track and accommodates up to the 95th percentile of people in terms of size and strength. The flexion range is adjustable up to 55°, with the apparatus being able to withstand extension forces applied at the leg at up to 1,017 newtons. It reads force measurements with ±1 Newton precision and 1° of resolution.

During this semester, the team ideated creative solutions and eventually converged on one idea of the MRI-safe dynamometer that was able to be tested and approved. Along with this, the project is documented with all of its components and set up with a procedure to be operated by any following researchers. After designing a high-quality model that meets the objectives of the project, the total cost of the entire project was $3,869.24. The sponsors unrestricted the original $1,500 budget and have approved of many high-end purchases to be able to produce a highly functional and precise design, which includes the pressure sensor, fiber optic cabling, acetal sheets, and the machining costs.

The dynamometer reached all required specifications, excluding the force requirement for loaded condition and reinforcement for maximum isometric load. Because of this, the project will be handed off to Carson Osmond, a Mechanical Engineering PhD candidate. Along with other recommendations for improvements, such as a pulley replacement for the transmission, the team will be handing off aiding documents covering the span of the project. The sponsors plan for this device to be used in biomechanic studies and to publish the device as an open-source and low-cost MRI dynamometer.

2. Introduction

2.1 Background

Recent studies, led by Dr. Kersh of UIUC and Dr. Damon with Carle Health Center, have been conducted regarding the motion of skeletal actuator muscles in the knee. Dr. Kersh acts as Director of the Tissue Biomechanics Laboratory on campus and performs research involving musculoskeletal joints, diseases, and injury prevention. Dr. Damon serves as the Director of Clinical Imaging Research at Carle Hospital, and his primary research focuses include muscular dystrophy, muscle fiber tracking, genetic diseases, and spectroscopy. Their research group is currently imaging without assistive devices and can only perform free loading movements of the knee at limited degrees of movement. The full scope of their research is not satisfied by analyzing a free moving leg without additional parameters. They are seeking to find maximum possible force exertion during extension, and the knee angle where maximum force occurs all while taking high quality images of the tissues in the MRI. This solution should provide the most data for a large population of subjects while also being MRI-safe and relatively noise-free.

2.2 Problem Statement

The Tissue Biomechanics Laboratory at the University of Illinois (UIUC), in conjunction with Carle Health, does not currently have a device to facilitate the movement of knee skeletal muscles while capturing images with an MRI machine and simultaneously recording force/angle data. While there are some solutions in existence that measure angles of motion in an MRI, apply loads, and control the movement of a leg, there is currently no complete solution that allows researchers to capture parameters such as force, angle, and the MRI image concurrently and in real-time. Existing MRI-safe sensors suitable for data collection cost thousands of dollars on their own, making them inaccessible to research groups with limited budgets. The team was tasked with coming up with an instrument that could accomplish a combination of three loading conditions, force sensing, and angle sensing for data collection, all with biocompatible and MRI-safe components and accommodating the 5th-95th percentiles of the human population. The dynamometer needs to work in three modes: isometric contraction, loaded movement, and free loaded movement, which will be described in further detail below. Combining imaging and force data allows researchers to obtain detailed analysis to understand the behavior of knee skeletal muscles under load. The mission of the dynamometer is to be able to apply dynamic measurements to understand knee and muscle function in an MRI setting (Figure 1).

Figure 1: Knee dynamic imaging captured from MRI device [1]

2.3 Project Goals and Deliverables

The team is responsible for presenting a mechanism with the capability of measuring leg extension force in three distinct modes.

These modes will be executed in an order that allows the researchers to capture the subject's maximum exertion and adjust the remainder of the testing procedure to be individualized. The first mode utilized is an isometric contraction condition. With the knee's position locked, the user will apply an extension force. This will allow MRI imaging to capture the actions of their muscles working while in a fixed position, and isometric contraction can be measured at various angles, this is necessary because the isometric force output of a leg is a function of the angle of the leg. This mode also allows researchers to record an individual's maximum leg exertion force. From there, there exists a static loaded movement condition, where users will have up to 40% of their maximum extension force applied against their leg as a constant load during repetitive extension trials. The third and final mode is a no-load free movement condition, where a user will perform repeated extension and flexion cycles without any resistance/load applied.

Continuous force and angle data is to be collected and synced to MATLAB plots for ease of analysis. Data will be synchronized with MR images so that at any time stamp selected, three pieces of information are available: the knee flexion angle, the force produced at the ankle by the knee, and imaging of the knee skeletal muscles.

In all, the team must create an apparatus to fit within the MRI bore and upon its rails while consisting of these four key subassembly systems: a knee pivot mechanism for angle locking, setting lower and upper bounds for knee extension angles, and leg support during testing, a transmission system for applying load to the leg and upholding the isometric contraction condition, a force sensing system,

and an angle sensing mechanism. The device presented to Dr. Kersh and Dr. Damon should feature a maximum knee extension of approximately 60° while the knee remains less than 7 centimeters from the magnetic isocenter of the MRI bore, where the radio frequency (RF) magnetic field signals are strongest. The struts, gears, and structures of the device must be made of MRI-compatible material while being durable enough to withstand 100% muscle output of a 95th percentile sized person's maximum leg exertion force during the isometric contraction mode with a safety factor of 2. Team members will write MATLAB code, as requested, to collect continuous force and angle output in real time. Force data will be obtained within ± 1 newton of error, and angle data will be measured within 1 angle of precision. At the end of the project, the apparatus will be provided to the sponsors with all necessary attachments added to measure force and angle for their future research studies on knee extensions along with all CAD files and a BOM with purchasing links for any necessary spare parts.

2.4 Literature Review

The inspiring work for this project originated from Brisson et al. [2] of the Berlin Institute of Public Health. They developed a multipurpose device that guides leg extension and flexion both passively and actively. The device also applies a load on the lower leg approximately 2 cm proximally to the malleoli, a part of the ankle, and includes a supporting leg plate for extension/flexion connected to a multiple geared transmission via pulleys. This gave the team a starting framework for designing the knee pivot/brace mechanism and transmission of our design. Additionally, they included a fiber optic angle encoder that they had purchased for several thousand dollars.

The main difference between the German research group's design and the goals of our project involved the German design's lack of force sensing capabilities. To begin designing a dynamometer with force measurement capabilities, it was crucial to explore what maximum loads the dynamometer must endure. In D'Lima et al., a research team performed average knee Maximum Voluntary Isometric Contraction (MVIC) tests on a variety of subjects for different kinematic movements and processes. Their results for the isometric contraction leg press found on average that the MVIC was 1.5 * the body weight of a subject [3]. Additionally, there is a 0.2 * body weight resistance that is accounted for. In Sarabon et al., they mention max torques are applied at 90-degree extension at a value of 3.1 Nm/kg of body weight [4]. This data revealed that an upper bound male standing at 6'2'' and weighing 250 lbs. would exert a maximum force of approximately 1,017 N on the force measurement apparatus with the force sensor placed at 75% of the shank/lower leg length, right above the malleolus. Utilizing these

values, it was discovered that the resulting maximum tension in the pulley would be approximately 3,460 N.

In addition to the force that the knee can output, another key aspect of the design concerning the human factors is the dimensions of users the device must accommodate. Tables 1 and 2 below outline important user metrics that were utilized in the design of the dynamometer apparatus, including but not limited to height, weight, and leg lengths for the 5th and 95th percentile users.

Table 1: 5th Percentile user metrics

5th Percentile Metrics		
Height, Weight (Female)	4'11", 113 lbs .	[5]
Upper Leg Length (Female)	12.047"	[6]
Maximum Calf Diameter (Female)	3.772"	[6]
Maximum Ankle Diameter (Female)	2.33"	[7]
Hip Width (Female)	12.2"	[8]
Knee Height (Sitting, Female)	18.66"	[9]
Thigh Clearance (Female)	4.4"	[10]
Knee to Malleolus Length (Male)	14.514"	[11]

Table 2: 95th Percentile user metrics

95th Percentile Metrics		
Height, Weight (Male)	6'2", 246 lbs.	[5]
Upper Leg Length (Male)	19.685"	[6]
Maximum Calf Diameter (Male)	6.015"	[6]
Maximum Ankle Diameter (Male)	3.043"	[7]
Hip Width (Male)	15.9"	[8]
Knee Height (Sitting, Male)	23.85"	[9]
Thigh Clearance (Male)	7.5"	[10]
Knee to Malleolus Length (Male)	18.204"	[11]

2.5 Project Constraints and Standards

Sponsors provided insight and guidelines involving what materials and practices are appropriate for a medical device in an MRI environment. The first and most important constraint is that unapproved materials were not allowed to be a part of our device to prevent induced magnetic forces, currents, and

heating that could cause significant injury to both the MRI scanner and the subject. Furthermore, metallic materials, even those which are non-magnetic and suitable for the MRI bore, create interference and artifacts during MRI imaging that would have a negative impact on experimental results. As a result, the team was advised to use plastic (Nylon) screws where possible, and otherwise, non-magnetic brass screws set at least 10 inches away from the magnetic isocenter (the center of the magnetic field, at which MRI images are clearest) of the MRI. Preferably, most of the brass screws used in the device must be 29+ inches from isocenter.

In addition, with this material constraint, many of the structural supports and shafts included within the device were to be made of plastic materials, which could withstand maximum forces exerted by a 95th percentile user. As mentioned in research, these maximum forces include a 1,017 N maximum leg extension force and a 3,460 N maximum timing belt tension. To account for this force, the team selected to design the most load bearing components to be made of acetal, a sponsor recommended material for its strengths and common use for medical devices.

A geometric study was performed to determine the best placement of the dynamometer within the MRI bore. Four subject-bore positions were tested: laying on the back (supine position) in line with the MRI isocenter, supine position off-isocenter with natural leg spacing, laying on the subject's side, and supine position with the leg hanging off the edge of the MRI bed (cantilevered). Using the maximum shank length of the 95th percentile subject, maximum ranges of knee flexion/extension motion were found using Fusion 360 CAD software (Figure 2).

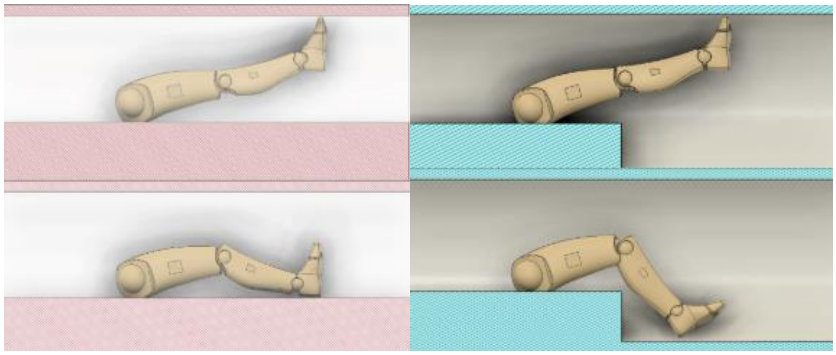

Figure 2: CAD simulation of supine leg motion on MRI bed (left) vs. cantilevered leg (right)

Using this data, shown in Table 3 below, the team was encouraged to move forward with the cantilevered leg positioning, with approval from project sponsors and Beckman MRI imaging staff. This provided an approximately 56° range of motion for the knee, which about doubles the results of the other tested positions while aligning with the sponsors' goals of achieving close to 60° of motion.

Table 3: Geometric study subject spacing results

Option	Supine-Isocenter	Supine- Natural Leg Spacing	Side Laying	Supine-Cantilevered Leg
Maximum Motion Range [deg]	28.89	21.67	31.62	56.107

Once assessed by our sponsors, the MRI dynamometer apparatus can be labelled according to ASTM F2503 to properly mark it as MR safe or MR conditional once tested for magnetic field-induced forces, torques, heating, et cetera as outlined by this standard. This classification will help should the sponsors want to publish a dynamometer solution as open source.

Throughout every step of the creation of the team's MRI dynamometer, it was crucial to continuously check in with the project sponsors and MRI imaging technicians at both Beckman Institute and Carle Hospital with any proposed changes to the design. This will help ensure the dynamometer apparatus remains safe to be used in MRI clinical studies.

2.6 Project Design Specifications and Ideation

During the ideation of the project, it was important to decide which of the 29 product design specifications (PDS), displayed in Figure 3, were most valuable to the creation of the MRI dynamometer and if there were any other elements that should hold priority during the project timeline. The design elements deemed most relevant to the project include ease of testing, prototyping time, cost, background knowledge, simplicity, performance, quality/reliability, materials, size, safety, and ergonomics. Each of these elements were scaled based on their importance (weight), with 5 assigning great importance and 1 assigning little. These were then implemented into the decision matrix for key elements of the design, such as methods to support the leg and perform force and angle measurement. The weighted table of chosen specification elements is featured in Table 4 below. The decision matrices for all initial concepts are available in the appendix in Tables 8-11. Final values in the table were found by taking an average

from every team member's weighted ranking to reduce bias and properly select the most optimal solution.

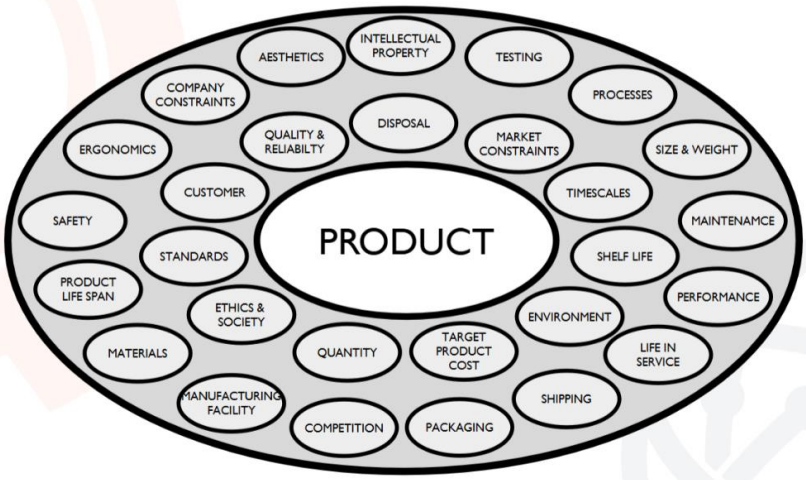

Figure 3: List of Project Design Specification (PDS) elements

Table 4: MRI Dynamometer team PDS

PDS Specifications	Weight Ranking
Ease of Testing	5
Time to Prototype	4
Cost	4
Background Knowledge	3
Simplicity	4
Performance	4
Quality	5
Materials	5
Size	1
Safety	3
Ergonomics	4

2.7 Unavailable/Discarded Solutions

Due to the various constraints on the project, some solutions for force and angle measurement were discarded almost immediately after ideation.

For angle sensing, the most apparent solution was an MRI-safe rotary encoder. However, when quoted, it was over $6,500, with the initial budget around $1,500. The team instead pivoted towards a custom encoder.

The original proposed optimal solution for a load cell was also disregarded due to it being approved at Carle Hospital but not the secondary location at the Beckman Institute Biomedical Imaging Center (BIC). The BIC had concerns of image noise due to the non-ferrous metallic components. Both an existing MRI safe load cell in the possession of the sponsors and an open-source load cell were not approved for usage at the BIC. The open-source load cell proposed in Santini et al [12] was the original proposed load cell as it provided an inexpensive, yet accurate solution. However, after disapproval of

the load cell options the team would further iterate to find a method capable of safely sensing the force. The pneumatic solution was also discarded due to concerns with compressibility of air, causing the team to convert to other mediums for force measurement.

The friction brake design for angle locking was discarded after the project proposal. After speaking with the project sponsors, it was decided that a more discretized angle setting option was agreeable for the final dynamometer solution. Plus, there were also structural concerns with relying on the clamping of a nylon screw between rubber to withstand the maximum forces exerted by a leg. Because the new angle lock solution with acetal pegs still features 12 different angle setting options in 5° increments, the sponsors agreed that this was a sufficient solution for the angle locking mechanism.

3. Overview

The dynamometer is a fully functional apparatus ready for testing and usage in an MRI. The prototype allows for the three testing conditions requested by the sponsors, including the isometric contraction, static load, and free moving condition. During these, it continuously senses the force and angle. Figure 4 features the four main subcomponents: Knee Mechanism, Transmission, Force Sensor, and Angle Sensor. All these subassemblies lie on a 2’x8’x3/4" MDF board that was cut at the Jackson Innovation Studio to have sufficient space to fit subjects' legs and fit properly along the rails of the MRI bore.

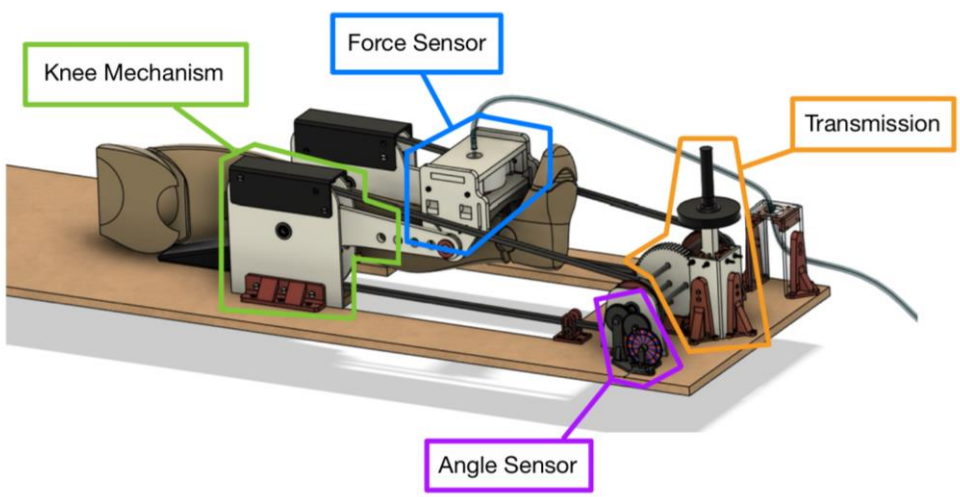

Figure 4: Full assembly of prototype in the MRI bore

3.1 Knee Mechanism

The knee mechanism, highlighted in green in Figure 4, is responsible for both setting a lower and

upper limit for extension motion and providing support and comfort for the subject's leg during research trials. On either side of the leg exists a set of knee blocks. The inner knee block contains an array of holes to fit an acetal peg that sets the initial or maximum flexion angle; this can then be easily set via MATLAB software prior to each leg extension trial in any of the three dynamometer modes. Between the knee blocks exist the pulleys and pulley guides, which hold the timing belt in place, alongside a strut that the force sensing "U-Brace" rests upon. This subassembly is placed on both sides of the knee and supports the leg during extension and flexion cycles (Figure 5).

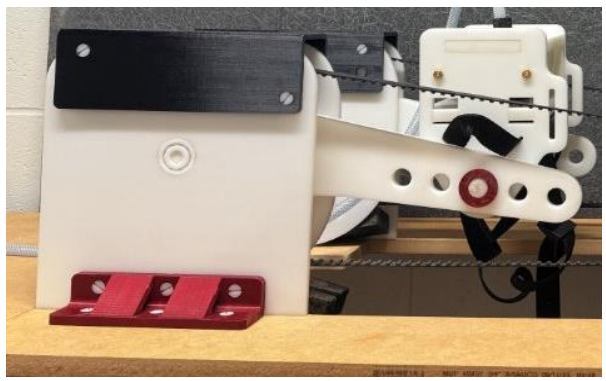

Figure 5: Knee mechanism subassembly

3.2 Transmission

The transmission, highlighted in purple in Figure 4, receives load from and transmits load to the user's leg. The key mechanisms are a rack supplied with a weight on top, which exerts a torque on a pinion gear, and this torque is transmitted to the knee mechanism via pulleys and timing belts (Figure 6). To lock the transmission for isometric conditions, a spline (inverse gear) is meshed with the teeth of the pinion. This restricts all rotation and absorbs the isometric contraction force.

Figure 6: Transmission side view of the rack and pinion

3.3 Force Sensor

The force sensor component is highlighted in blue in Figure 4. This sensor is hydraulic-driven and operates by converting an applied force to pressure and transmitting it to be measured outside the MR room. The "U-Brace," shown in Figure **7**, is strapped to the proximal side of the subject's leg, with a sliding plate above cushioning. The sliding plate is attached to a plunger, which when pressed, exerts pressure on water in a syringe housed inside the brace. Tubing extends from the syringe to the control room, where a pressure transducer detects the pressure in the system.

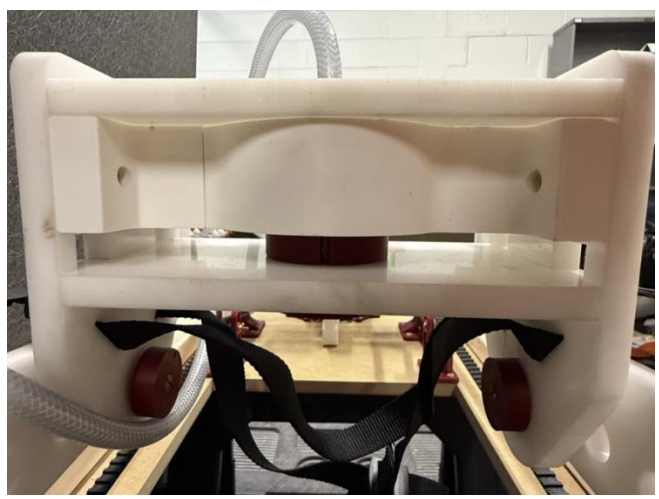

Figure 7: Force sensor U-Brace with hydraulic line coming out

3.4 Angle Sensor

The angle sensor is highlighted in green in Figure 4. It is comprised of a series of gears to turn a disk at a desired rate in comparison to the rotation of the user's leg. The disk is patterned with translucent segments of three colors. A fiber optic cable emits light from outside the MR room to be filtered by this pattern, while another receives light filtered by this disk. The receiver is connected to an enclosure outside the MR room with sensitive photodiodes to read the color and decipher the angle of rotation.

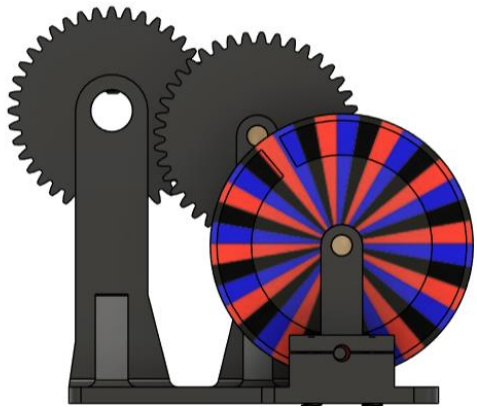

Figure 8: Angle sensor

3.5 Spatial Context

The four subcomponents are all mounted onto one board which completes the apparatus (Figure 9). The apparatus is made for ease of transport since will often be set up, used, and then removed from the MRI room, this is because all of the main components are fastened to the MDF board. Unlike most medical imaging where the MRI bed is slid fully into the MRI, the apparatus sits supported by the bed on one half, and by rails for the other. This is to create additional space under the bed which would otherwise restrict the motion of a subject's leg, as concluded in the geometric study.

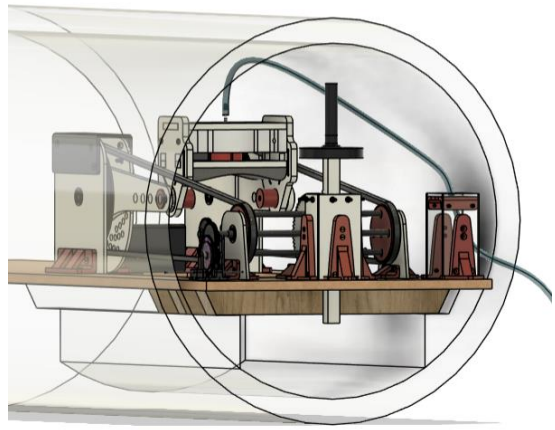

Figure 9: View of MRI dynamometer with bed half in and supported with cross-sectional beams

The operation of the MRI is from a control room, protected by magnetic shielding. Here, data from the force and angle sensor is processed as the fiber optic and hydraulic lines are passed through a port in the wall, shown in Figure 10. The hydraulic line has a quick disconnect, and the fiber optic cables can be unclamped from a sensing hub and light emitter, allowing technicians to route the lines through the access port during setup.

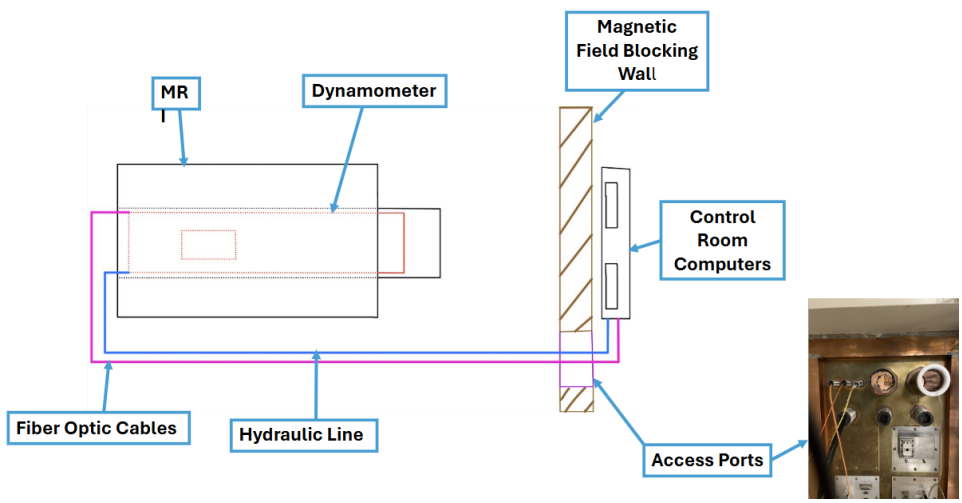

Figure 10: Overview of sensor cables

4. Design/Iteration

4.1 Knee Mechanism

One of the main elements of the knee mechanism is the angle locking system. After discarding the friction clamping brake mechanism, the team quickly converged to a peg board idea, which became the final design to best support the weight and forces exerted by the leg. On either side of the leg exists a set of knee blocks. The inner knee block contains an array of holes to fit a ½" diameter flanged acetal peg. These holes serve to set an initial or maximum flexion angle and were manufactured to feature 55° of angle setting options in 5° increments. The holes are clearly labelled for researchers to sync initial angle data to MATLAB when recording results for each of the three dynamometer modes. Using the length of the longest possible leg in the dynamometer device (95th percentile user), an upper motion limiting peg was also included in the design in order to prevent damage to the top of the MRI bore. The angle lock design is pictured below in Figure 11.

Figure 11: Angle lock feature in knee mechanism

As discussed, the upper acetal peg sets an extension limit to prevent the longest possible leg from damaging the MRI bore. The angle found between the subject's thigh and the supporting MDF stabilization board in this instance is approximately 14.5°. Using this metric, a thigh wedge was designed and printed using PETG material. The lower section of the thigh wedge features a 12" slope to accommodate the lower 50th percentile of subjects' upper leg lengths (12.047"-16") while the extension piece to 16" fits approximately the upper 50th percentile of subjects' upper leg lengths (16"-19.685") [6]. The two wooden dowels inserted into the holes in both pieces of the thigh wedge both prevent slippage

between the sections and ensure the proper alignment of the wedge. The thigh wedge has added ½" thick nitrile (NBR) foam to increase comfortability. Extra MDF board will be positioned below smaller subjects' and the thigh wedge to ensure their knee is aligned with the center of the pivot axle of the angle lock. This will ensure that measured angles of extension are consistent across all subjects. The thigh wedge is pictured in Figure 12 below.

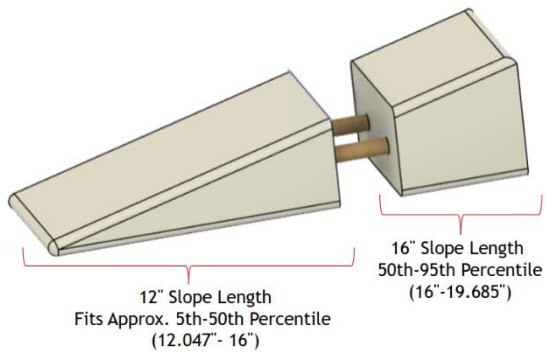

Figure 12: Adjustable Thigh Wedge Piece for Knee Mechanism

Another part of the knee mechanism called for a strut structure that rotates with the leg and connects to the pulleys and their surrounding pulley guides that hold the timing belt in place. Housed within the two knee blocks on either side of the knee is a strut that extends out parallel to the shank of the leg. Along each strut are 5 different holes that accommodate lower leg lengths of the 5th-95th percentile subjects. These holes allow the force-sensing "U-Brace" to rest atop the subject's shin, at 25% of the distance from the ankle to the knee. These two struts would rotate about an acetal axle that is colinear with the knee so that the pivot point is the same for the struts and the leg. The struts are connected to the pulleys/pulley guides via a 5-peg wheel design, designed to guarantee all pieces contained between the knee blocks rotate together, as depicted in Figure 13. The pulleys connect the knee mechanism to the transmission subassembly. All these pieces are shielded by supports to prevent pinch points and make up the knee mechanism. It was important to ensure only non-metallic nylon screws were used by the knee to prevent imaging artifacts. The full assembly of the knee mechanism viewed from above when removing the top bracket pieces, is shown in Figure 14 below.

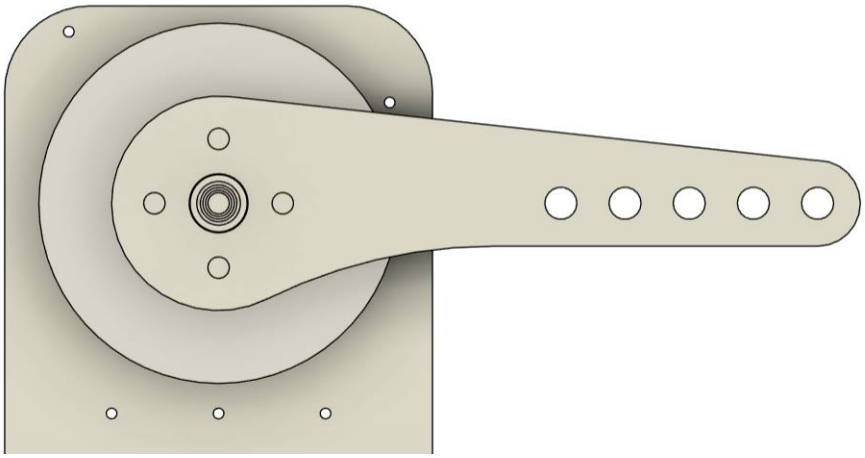

Figure 13: 5-Peg Design Internal to Knee Mechanism

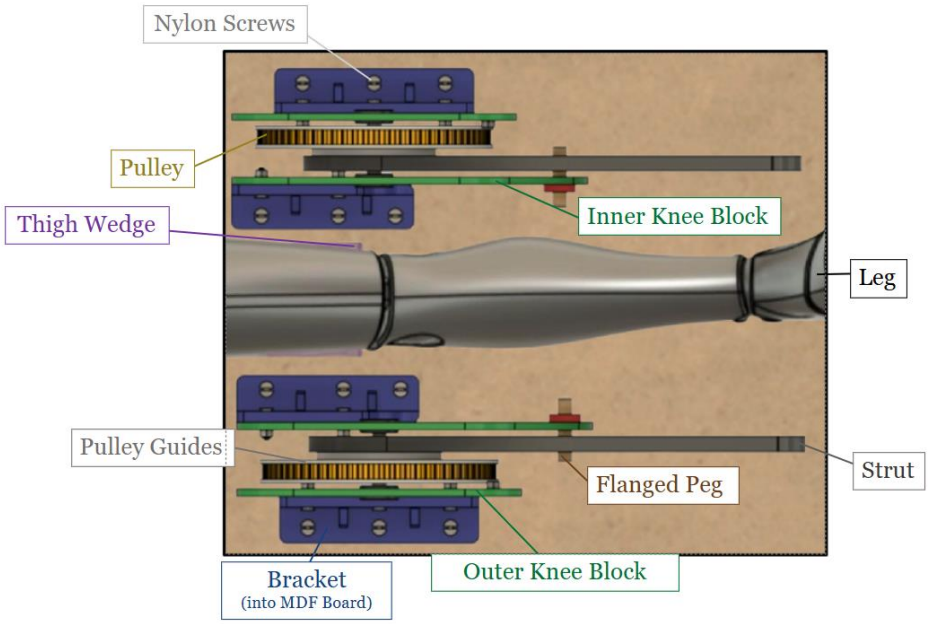

Figure 14: Full Knee Mechanism Assembly Top View

Using acetal, a high strength and biocompatible plastic, allows the leg and struts to be supported during maximum loading cases with factors of safety of approximately 3.5 and 10 for the acetal knee block walls and angle lock pegs, respectively (Equation 1 in Appendix). The thigh wedge was made from PETG instead of PLA to ensure it would be able to support the weight of the thigh, which is approximately 11.9 kg (26.25 lbs.) for a 250 lb. subject [13].

One design change that arose during the creation of the knee mechanism was the thickening of the strut. When performing Finite Element Analysis (FEA) on this component, a concerning deflection of 0.51” was observed with the maximum leg exertion force applied, despite having a safety factor of approximately 2. A tangent was created between the circular portion of the 5-peg wheel to the straight section of the strut, which thickened the top section. With this adjustment, the new deflection was equal to 0.003” at the maximum possible load, and the factor of safety surpassed 15. This iteration can be seen in Figure 15.

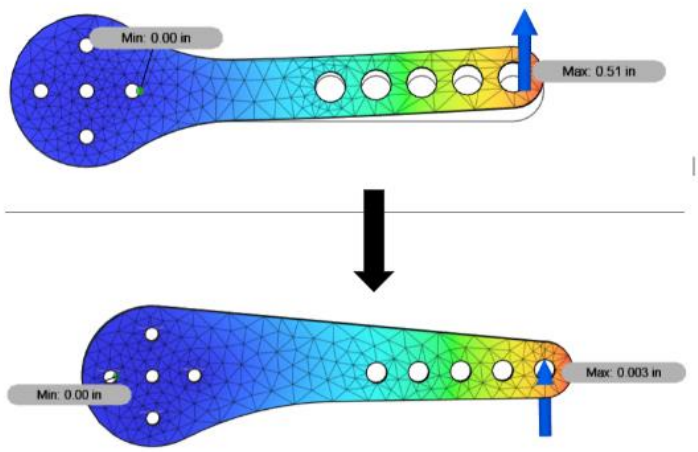

Figure 15: Strut Redesign to Minimize Deflection During Maximum Load Case

A final redesign came from adjusting the inner knee blocks of the angle lock. After manufacturing, it was realized that the length of the inner knee wall interfered with the “U-Brace” when attached to the shorter holes of the strut, so a redesign was required that shifted the angle lock holes inwards and further filleted the edge of the inner knee block; some hole positions were redesigned when translated to ensure the 5° increment between angle lock holes was maintained. This is pictured in Figure 16.

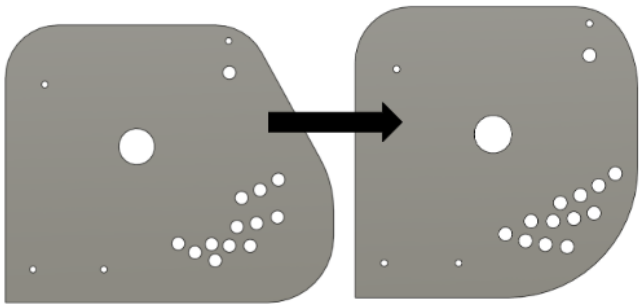

Figure 16: Angle Lock Inner Knee Block/Wall Design

4.2 Transmission

The design of the transmission was heavily inspired by the research paper by Brisson et al. which similarly featured a rack and pinion to statically load the system [2]. Several additional ideas to supply weight to the system were discussed. This includes a pulley system extending outside of the MRI bore loaded using a vertical weight rack. Another solution was a pneumatic system, increasing or decreasing pressure converted to a force akin to existing exercise machines. However, the implemented design was selected for its simplicity, relative cost and ease of transport and setup in comparison to these other ideas since it is much more compact and has been proven reliable in the inspiring work.

In addition to its original purpose of handling static loading, the transmission was also chosen to incorporate the isometric leg-locking mechanism by relocating the "friction brake mechanism" from the knee to the transmission. This brake mechanism was fleshed out to be a gear spline (inverted gear), as seen in Figure 17. The spline, when interlocked with the pinion, restricted all rotation of the system which would also be extended to the leg. This design changed from the initial idea of a friction brake (allowing continuous rotation and infinite angles for isometric locking located in the knee mechanism) to the spline due to the concern of quick fatigue and low strength. Thus, the spline (a discrete mechanism) was prioritized for its sturdiness.

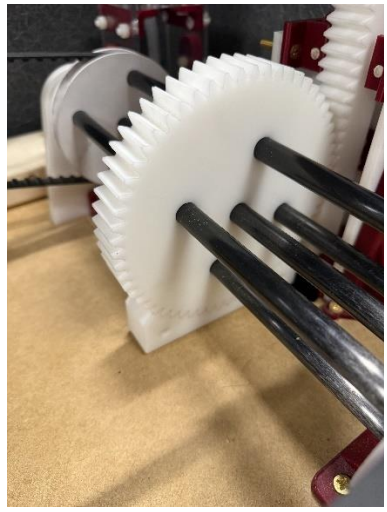

Figure 17: Gear spline interlocked with the pinion

Research for the maximum case user in terms of torque per unit body weight was utilized as 3.1 Nm/kg [4] and the maximum leg length was utilized in Table 2. The combination of the maximum strut length of the knee mechanism and the maximum torque output were combined to compute maximum forces applied to the strut. Worst case strut forces could also be linked all the way to transmission components by the balance of torques.

To design an optimal geometry for the transmission components variables such as worst case torques, leg lengths, strut lengths and realistic dimensions of gears were turned into variables and iterated upon with python code. There, parameters were easily changed, and a table was constructed to compare the benefits of various geometries.

To simplify iteration, some constant assumptions were applied across all calculations. This includes a minimum thickness of the gear, material including acetal components for machines and carbon fiber rods, and a gear reduction from the knee mechanism pulley to the transmission output pulley. Additionally, a geometry based on design intuition and knowledge of shaft bending was assumed to incorporate five carbon fiber shafts into the design. This pattern was necessary because in the absence of sturdy shaft collars and steel keyed shafts, keying the transmission would prove difficult. Thus, the design was assumed to have four outer shafts spaced 90 degrees apart which rotate on a central shaft. The outer shafts served two purposes: first was to key the gears and second was to reduce bending stress in each rod since the pinion being placed in the middle of the transmission allows for a large distance between pinned locations and thus a longer shaft will bend more under the same input stress.

The assumed minimum thickness was determined iteratively using Equation 5 and was influenced by the budget constraints of acetal sheets as they were proven quite costly. Table 7 in the appendix shows the results from the python iteration. The final selection was a 60-tooth gear for a 6-inch pinion, this was deemed optimal as it was a compromise of machining simplicity (less teeth and smaller diameter correlated to less money), factor of safety and the discrete angles that the pinion would be able to lock to the spline for isometric loading.

As mentioned in the assumptions, the geometry of five shafts was selected and can be visualized in Figure 17. To ensure that the carbon fiber shafts would work in the design and to select the minimum thickness of the carbon fiber the main mode of shaft failure (failure to bending stress) was analyzed. The key assumption for this bending was that the most bending stress in the rods occur during the isometric contraction test since a subject can output full strength on the system. Since the gear spline and pinion are interlocked with the shafts going through the pinion it was assumed that the rods were pinned in the middle thus the length of the rod over bending was the shaft length over two. Once this key assumption was made the minimum diameter of carbon fiber rod was selected so that there would be a good factor of safety to bending stress in the transmission.

To reduce stress on the transmission, the pulley ratio is 2:1, limiting the transmitted torque to the pinion to half the user's output (Figure 18). This avoided the need for overly thick and costly pinion gear and pulleys.

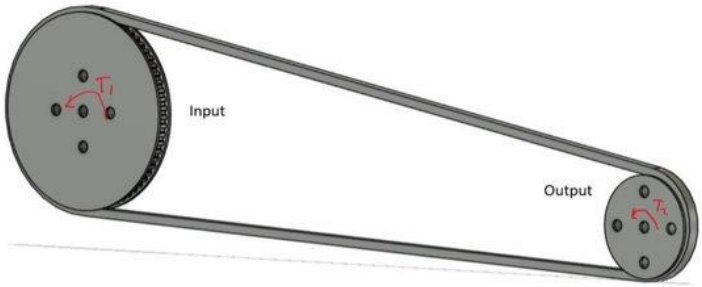

Figure 18: Visualization of torque reduction for isometric condition

The design of the spline brake utilized the maximum load case on the transmission during isometric contraction. The minimum tooth count of overlap to prevent failure was found to size the spline, and the current features 17 teeth at five times the minimum required.

While everything was optimized to withstand a large load either exerted on the transmission or supplied from the weight rack, a problem was discovered during the manufacturing process. The gear reduction from 2:1 for mitigating stress when the user applies force during the isometric condition negatively affects the mechanical advantage when the system applies a load on the user's leg. Accounting for the lever arm of the strut, using the largest leg at the furthest pin (14”), 3/7ths of the weight applied to the system is seen at the leg. Despite the limitation on static loading, performance during the more demanding isometric condition can handle these loads with the implementation of the gear reduction while still being able to apply significant load to the subject’s leg.

The primary cause of this limitation is not mechanical failure. It is a geometrical constraint, as in Figure 19, the maximum weight applied to the system is 50 lb. Due to the actual weight geometry, the top of the weights will contact the top of MRI bore if additional weight is placed on top, making it impossible to load more weight at maximum extension.

With this design, to get a 1:1 force input output ratio, the travel distance of the rack must equal that of the path of the arc length of the furthest pin of the strut. This is not feasible with the current apparatus. Despite the problem with mechanical advantage for the interim of this paper, it has been deemed that the 27 pounds applied to the leg is enough for the 80th percentile of users.

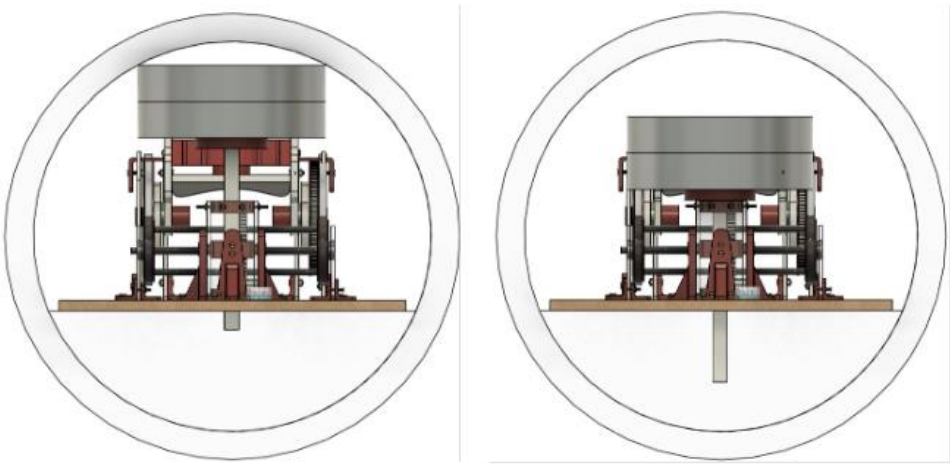

Figure 19: Visualization of weight rack spatial constraints in MRI bore

A belt tensioner was implemented since it is a standard practice to apply tension to a belt to help aid in manufacturing and assembly tolerances. The tensioners were added to the bottom line of the pulleys; this section is otherwise slack and does not see as much tension as the top line of the belt. The

tensioner acts like a slider that can be locked in place (Figure 20). It consists of a fastener with bearings surrounding it, constrained by a vertical rail. The bearings/fastener can be raised or lowered on the slider to increase or decrease tension and fastened to any position with friction. This is easily accomplished with a wrench and screwdriver.

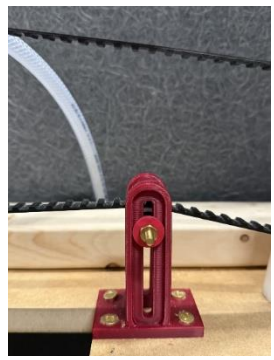

Figure 20: Belt tensioner in raised position

4.3 Force Sensor

To gather force data representative of direct effort from the leg, a sensing element must be placed between the leg and the target to which the force is being applied. This ensures it lies within the force transmission path. This is achieved in this design via the "U-Brace" which surrounds the lower leg and connects to the struts of the knee mechanism and, through them, the transmission.

The sensing element itself is the most novel component of this subassembly, using a water-filled syringe tubed to a pressure sensor outside the MRI room. Under the assumption of incompressible fluid, the water vessel encounters a force applied by the plunger, which is experienced as a compression pressure on the water inside based on the displaceable area, as seen in Figure 21. Although this pressure is not experienced by the sensor immediately, the pressure wave moves at the speed of sound in water through the tubing, sufficiently fast for this experiment. It can be measured and converted to a force reading via the definition of pressure, which is seen in Equation 6 of the Appendix.

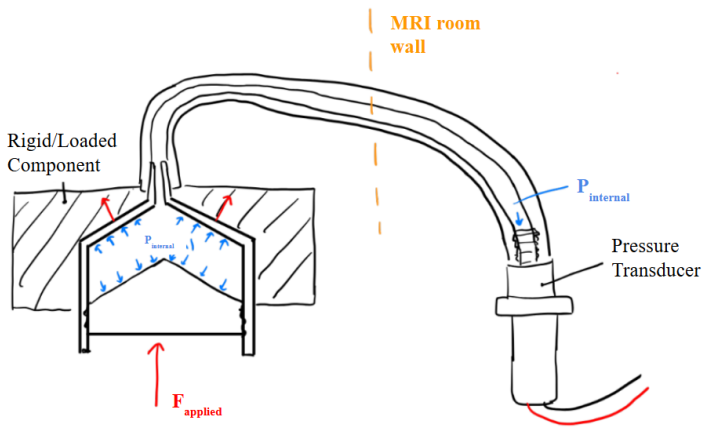

Figure 21: Schematic of force-to-pressure transmission to sensor

The "U-Brace" comprises of multiple plates of Delrin (acetal) with thicknesses determined to be satisfactory for load bearing using FEA. It is held together by a PLA anchor plate that simultaneously acts as centering alignment for the syringe. Brass fasteners secure the plates together. The bottom plate slides on rails on the side plates lubricated with silicone grease, and the plunger of the syringe is fastened to the bottom plate. The movement of the rails is necessary to allow a force to be exerted purely on the vessel, for situations where some air in the pressure vessel or flexibility of tubing allows some compression. Slots for calf straps are located on the side plates to ensure the brace conforms to the movement of the leg, and slots for ankle straps exist for potential experimentation with a locked ankle angle. Padding is attached via Velcro to the sliding plate, which creates a comfortable interface and is grooved to center the subject leg to the plunger. Pegs with fasteners to clamp them together work as the connection between the struts of the knee mechanism and as a pivot to conform to leg movement. The full "U-Brace" assembly can be seen in Figure 22.

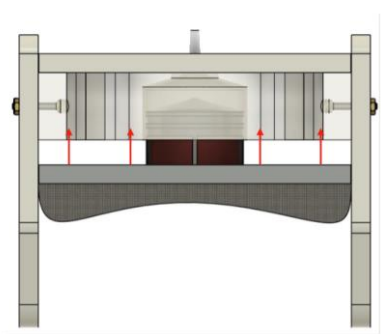

Figure 22: U-Brace with arrows representing motion of the sliding plate

The syringe used as the pressure vessel was chosen as it was commercially available for purchase and therefore a budget friendly approach in comparison to manufacturing a custom vessel and plunger. The size chosen was maximized to minimize the internal pressure of the system because the area of the plunger is inversely related to the pressure it applies, as in Equation 6. FEA was performed to ensure the system could withstand the maximum internal pressure, resulting in a safety factor above 8. The tip of the syringe has a double-sided barbed fitting press fit into it, with epoxy creating a watertight seal. The barbed tubing was added on due to the hose fit over time wearing out and coming off too easily. When the tubing is clamped to the barbs using plastic hose clamps the connection is much more secure. The 250-psi rated tubing extends for 40 feet, until it reaches a quick disconnect shown in Figure 23 which allows detachment of the system from metal or electronic components such as the pressure sensor. At the other end of the disconnect is 10 feet of tubing which ends in an attachment to the pressure sensor via NPT threads and sealant tape.

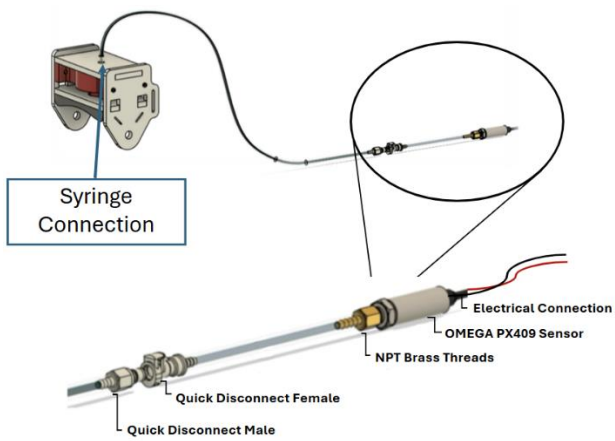

Figure 23: Visualization of the force sensor piping line (not to scale)

The unique loading cases presented a challenge to minimize error. The isometric loading far surpasses the typical 40% load case, and as such the pressure increases similarly. However, since the precision of most pressure sensors is dependent on the full-scale output, the upper limit of the pressure-sensing range. This means relative error for smaller readings is much larger. A spreadsheet showing a range of solutions using a maximum isometric load of 1017 N, experienced as 43 psi was presented to the sponsors. The chosen sensor was the Omega PX409, which is high precision as it allows for potentially <1% relative error for the smallest reading, with ±1 newton of precision for all readings. It is

worthwhile noting this sensor generated a large cost at $935.83, which dwarfs any other component of the budget and is the largest source of cost overrun for the project. This is in Table 12 of Appendix E.

One issue, which was expected but not quantifiable prior to manufacturing, was the frictional interaction between the O-rings of the rubber plunger and the walls of the syringe. Once assembled and water was a added to the system, the intuition was verified and there was water in the system. This was improved by applying O-ring lubrication to the sides of the rubber plunger.

It was discovered in design and testing that disturbance of the water line can cause noise in the force sensor readings. Since the hose line and the force sensor traverse a radial path, there is significant movement of the hose where it could interfere with components near the transmission causing signal noise or a jam of the rack and pinion. To control the movement of the piping, a hose guide was implemented (Figure 24) to prevent the hose from hitting any of the components on the transmission while the leg is in motion.

Figure 24: Image of Hose Guide

4.4 Angle Sensor

The angle sensor must also follow the same constraints of any MRI-safe component, which limits usage of standard electronic angle measurement systems. The primary motivation for the design of the angle sensor was to emulate existing optical encoders, which measure angular rotation, without the budget or time for high-precision, intricate components, or MR-sensitive or interfering components within the MRI bore. To accomplish this, fiber optic cable is a safer alternative to shielded wires, and

the light transmitted through can be mechanically manipulated within the MRI bore.

PMMA core fiber optics were chosen as they are relatively inexpensive and typically have larger aperture sizes compared to other fiber optics (more than a factor of 10), allowing more light to be absorbed with less precision of the setup (due to the movement of the apparatus). These cables attenuate visible light the least out of the wavelength spectrum, so the signal generated by rotation is picked up via color sensing.

The subassembly consists of six major components: the emitting and receiving 4mm core fiber optic cables, the gear train subassembly, the encoder wheel, the mounting subassembly, and the sensing circuitry.

A 30W white flashlight emits light which is focused with a lens into the emitting fiber optic. This fiber optic cable then is fed through the MRI room bore and is mounted near the encoder wheel as shown in Figure 28 below. The fiber optic is secured by placing it between two plates with indents, clamped together with nylon bolts and nuts. The bottom plate is part of the angle sensor mount's base. The fiber optic is placed as close to the encoder wheel as possible while allowing the encoder wheel to rotate on the axle freely.

To gather the knee flexion angle, rotation could be captured anywhere along the transmission of the apparatus. It was decided to implement the sensing component along the same shaft as the pinion gear, as the placement is favorable for routing the cabling. The gear assembly which translates this motion to that of the filtering disk consists of three gears. Gear 1 has 40 teeth and is mounted on the transmission shaft using a shaft collar as shown in Figure 26 below which ensures that it rotates with the input transmission shaft. Gear 2 is a compound gear with two sets of teeth and is mounted to freely rotate on a 0.25" wooden dowel supported by two supports on the angle sensor mount. The 20 teeth mesh with gear 1 whereas the 40 teeth mesh with gear 3. Gear 3 has 16 teeth and is mounted to 0.25" wooden dowel via a collar shaft and is rotationally locked to it. The angle sensor assembly is featured in Figure 25.

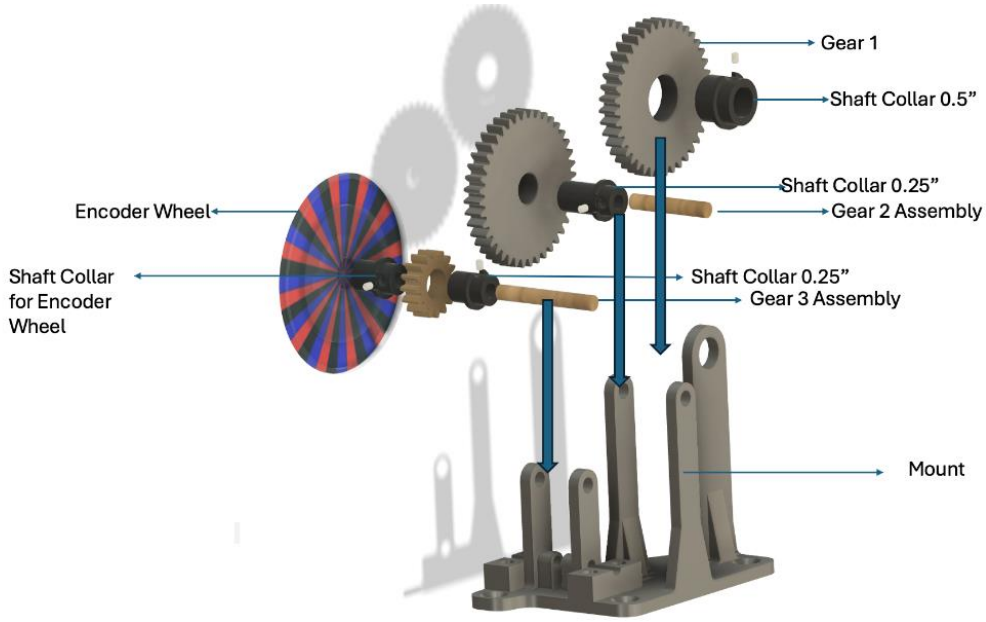

Figure 25: Angle Sensor Assembly

The wooden dowel mounting Gear 3 further passes through two mounts, which hold the encoder wheel as shown in Figure 26. This encoder wheel is also rotationally locked to the dowel via a shaft collar. The gears thus result in a 1:10 total gear increase from the knee mechanism (including the pulley ratios) and cause the encoder wheel and its shaft to rotate 10° for every 1° of knee flexion. The encoder wheel consists of a laser-cut acrylic base with a printed translucent sticker sheet on top. It is patterned with three consecutive segments of the colors black, blue, and red. The input fiber optic transmits light through this encoder wheel, which causes the color of the light to change to the corresponding sector of the encoder wheel.

Figure 26: Angle Sensor

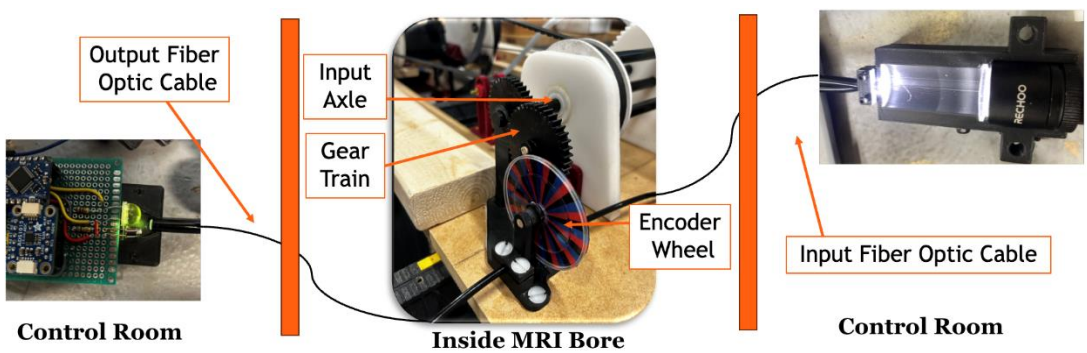

Figure 27: Angle sensor schematic

The light, after being filtered a specific color, then enters the 40 ft. receiving fiber optic cable, which passes through the MRI room port to be detected by two photodiodes (Figure 27). Each of these photodiodes are sensitive to different wavelengths of light. One of the diodes is a visible photo diode enhanced for the blue/green spectrum of range 410-580 nm with a peak sensitivity wavelength of 525 nm (blue-green). The other photodiode is a planar silicon photodiode of range 400 – 1100 nm with a peak sensitivity wavelength of 925nm (infrared). Using the voltage across these photodiodes, we can

encode a 2 bit number corresponding to the color of the segment of the encoder wheel inline with the fiber optic cables. These are 10 for red, 01 for the blue and 00 for black. Depending on the previous color detected and the current color we increment or decrement the final angle counter. If the colors go red-black-blue then the counter is incremented whereas if it follows blue-black-red then the counter is decremented.

The angle sensor is placed on the MDF board via a mount. The mount's base shown in Figure 28 is fastened to the MDF board using nylon screws. Further, the mount consists of supports for the wooden dowels for Gear 2 and the Gear 3 – encoder wheel combination. It also has base plates attached to it for mounting the fiber optic cables.

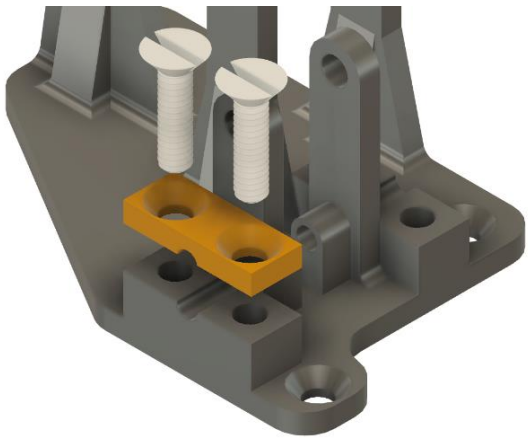

Figure 28: Fiber optic mount

4.5 Sensing Circuit

The angle sensor and the force sensor both utilize electronics outside the MRI room. These electronics are either mounted or soldered to a single perforated PCB together as shown below in Figure 29. The schematic of the circuit is also shown in Figure 30. The components of the circuit are an Arduino Nano, a 12 bit Analog-to-Digital Converter (ADC), two photodiodes, a Zener Diode, a few connectors and resistors.

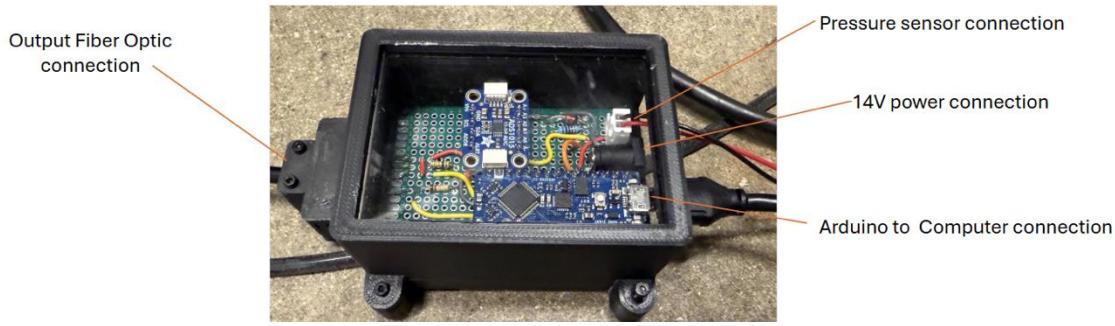

Figure 29: "Sensing hub" circuit enclosure with labeled connections

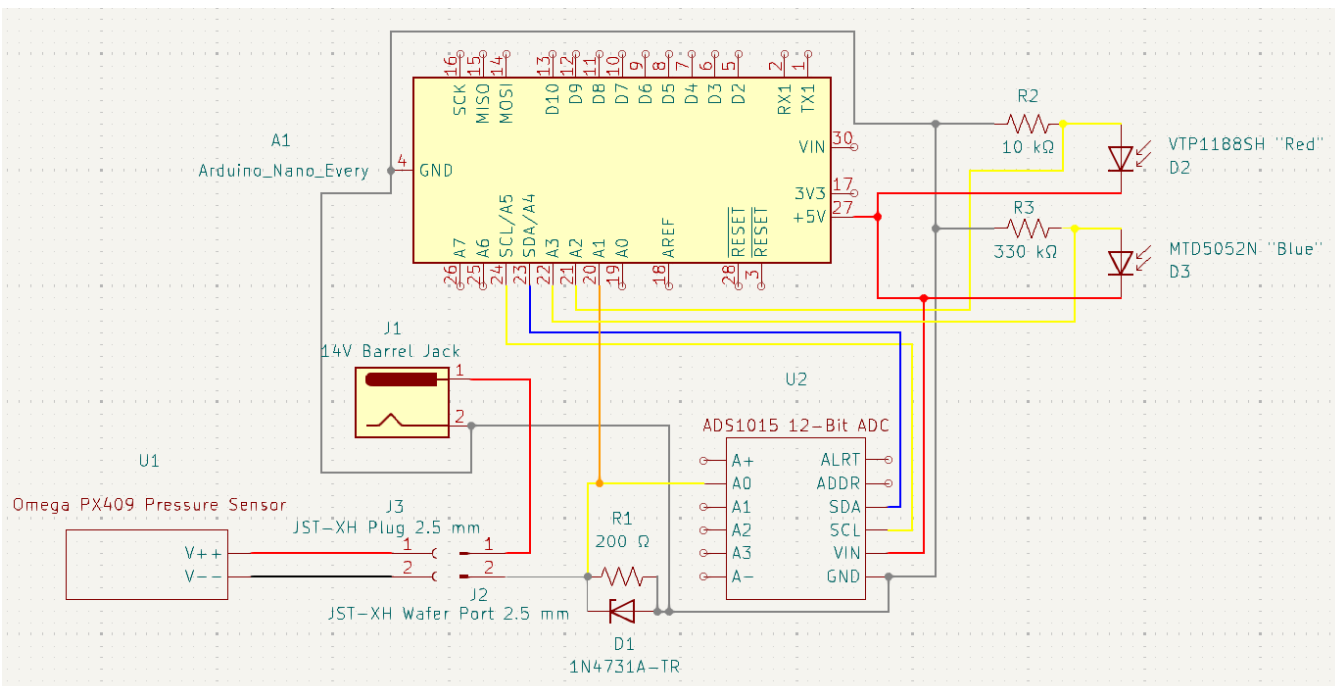

Figure 30: Fritzing Schematic for Circuit

The pressure transducer requires a DC voltage input from 9-30V, and outputs current within the 4 – 20 mA range, directly proportional to the pressure range of the sensor at 0-50 psi. A voltage is generated across a 200Ω shunt resistor in series, and with a 14V power supply the maximum loop resistance of the sensor is not violated. The voltage lies within the range of 0.8-4.0V and is measured by an analog-to-digital converter (ADC). The microcontroller does not have an adequately precise ADC, however, as the precision of the sensor is high, with 1250 discrete output levels. A separate 12-bit ADC

(4096 levels) probes the voltage with an analog input pin. This reading is mapped to the pressure range and used to calculate force applied.

A 4.3V Zener diode connected in parallel with the ADC to avoid over-voltage and damage to input pins.

The photodiodes of the angle sensor output current, since they operate in reverse-bias. This requires shunt resistances of 100 kΩ for the visible photodiode and 10kΩ for the planar photodiode, both of which depend on the typical excitation current of each. The voltages across these shunt resistors correspond to the "readings" of these photodiodes and are measured by the Arduino's ADC.

5. Manufacturing

A large portion of the components needed to build the dynamometer are custom and specialized parts. The group needed to find the methods of machining these parts that were available to them. The machine shop at the Sidney Lu Mechanical Engineering Building has a large variety of machining methods. Meanwhile, Jackson Innovation Studio provides access to 3D printers and laser cutting machines. Material selection was vital in choosing manufacturing methodology. Most load bearing parts in the apparatus needed to be made of strong, nonferrous material. Through research, the team found that an ideal material for MRI-safe mechanical machines was acetal (Brisson et al.). Acetal is an easily machinable plastic and safer in medical settings because it does not harbor bacteria easily like other porous plastics.

For machining these parts, the water jet and laser cutter were chosen. These two tools require the parts to be 2D; this was kept in mind when designing all acetal components. FEA force analysis was also needed to ensure these 2-dimensional parts could withstand the forces the dynamometer would be seeing. The ¼" acetal was cut with the laser cutter while the ½" and 1" acetal was cut on the water jet. Laser cutting provided a cheaper solution for manufacturing but was not able to cut into thicker materials. Alongside cutting, the machine shop reamed the holes in our parts to a specific diameter. This allowed the rods in the assembly to maintain a prescribed tight or loose fit.

Most of the 3D printed parts in our assembly act as a support to keep the components upright and fastened to the board; these parts were made of PLA. While PLA is a weaker material than acetal, it did not need to be made with a 2D profile. Force was instead distributed into the third dimension. Each PLA part was designed with extra wall thickness and infill density up to 60% where needed.

Simpler custom parts included foam pads, carbon fiber rods, MDF board, acetal dowels and 2”x4” planks. These parts all underwent a cutting process with a hacksaw, table saw, or wood CNC machine. Most of these parts were designed in CAD, FEA tested, then cut to length.

Once all parts were manufactured, the assembly of the subcomponents (knee mechanism, transmission, force sensor, and angle sensor) was methodical and simple. Fittings consisted of a loose or tight fit where needed. All removable pegs and sliding axles had a loose fit, while pegs connecting struts to pulleys had a tight, press fit and are not meant to come apart. Fasteners consisted of brass and nylon screws and nuts. Brass screws fastened the transmission due to higher strength, but they are metallic, and, thus, were kept away from the knee. Nylon screws were used on the knee mechanism because they do not cause image distortion and have a higher yield strength when compared to other non-metal fasteners. Pilot holes were drilled and tapped to provide thread contact with these, as direct screwing was unsuccessful.

Spacing of struts, with respect to the transmission, consisted of an iterative process. The belt that connects the two components is required to be in tension for the machine to operate. Initially, measured dimensions from the CAD model were marked on the board where the subcomponents are located. This method did help in aiding the general placement of the parts; however, the belt was unexpectedly not in tension. The team then squared and taped down the transmission and pulled the belt in tension and marked the final position of the screw holes. This created a tensioned belt and a sturdy connection between the board and the subcomponents.

The manufacturing processes used were the most cost-effective methods available to us on the university’s campus. Although the machine shop quoted the team a total of $900, it is believed this amount is justified given the size and mechanical complexity of the dynamometer.

6. Testing

6.1 Force Sensor Testing

Initial testing of the force sensor was implemented by creating a testing jig in Figure 31. The syringe was inserted with tip facing downwards, and a static load was applied. The force sensing circuit and MATLAB plots verified that the pressure to force conversion yielded the same force as the applied load. Values were as expected, with minor differences due to hydrostatics, a known variable that needed to be accounted for. Overall, the values matched the static loads and it was deemed necessary to

implement a function to zero the force given the additional hydrostatic pressures of the system.

While applied loads were measured accurately under steady-state conditions, testing revealed hysteresis between the applied load and the plunger's response—particularly in a delay after the load was removed. The force sensor responded to the application of the load quicker than the removal, as time for it to accurately reset was slower than the initial response. This hysteresis is likely mainly due to the properties of the syringe, including the friction between the wall of the syringe and the plunger.

Figure 31: Initial testing setup for force calibration

To further explore the integrity of the design, as well as hysteresis, additional testing was performed at the project sponsor Dr. Kersh's lab. An experiment was written and proposed to a graduate researcher, Michael Focht, who helped perform the experiment on an Instron Machine (Figure 32). The primary goals were to test the system for leakages under the maximum weight and utilize various load rates to classify the behavior of the system. Additionally, a constant load was cycled on the system and the response was observed over twenty-five cycles. Data was gathered from both the Instron and the MATLAB script.

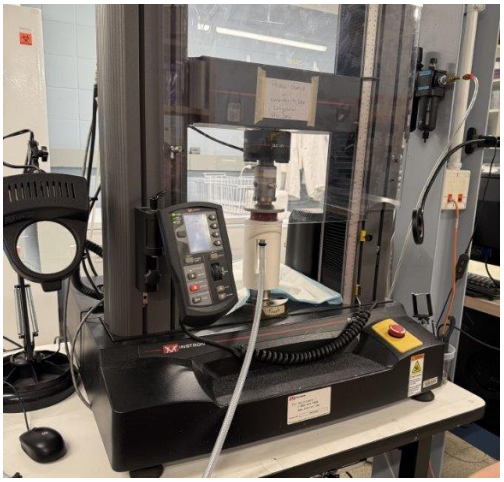

Figure 32: Setup from the Instron testing

Overall, results from the testing were limited in quantity of data due to timing constraints so future uncertainty analysis and additional data analysis should be performed. A discussion about developing a mathematical model for relaxation based on the data was discussed but was declared out-of-scope by the sponsors. The interim results of the force sensor proved that the sensor could withstand a maximum load of up to 60,000 N/Min without system leaks. Based on the cycle testing it was deemed that at the beginning of each testing session the syringe should be cycled manually by hand at a minimum of 20 times to warm up the system and reduce hysteresis. This conclusion was made based on the cycle loading graph in Figure 33 which requires 15 cycles to steady state, but for the purposes of consistency, 20 is a safe estimate. The imprecision of an operator's hand compression rather than the Instron contributes to the cause for this overestimate.

Additionally, a relaxation time of about 3.5 seconds can be expected for the worst-case loading rate and highest force applied. This was found by observing the time it takes once the load is released for the pressure sensor reading (Figures 33 and 34) to return to zero. A manual based on the findings, testing and setup will be provided to the sponsors for further information on testing and use.

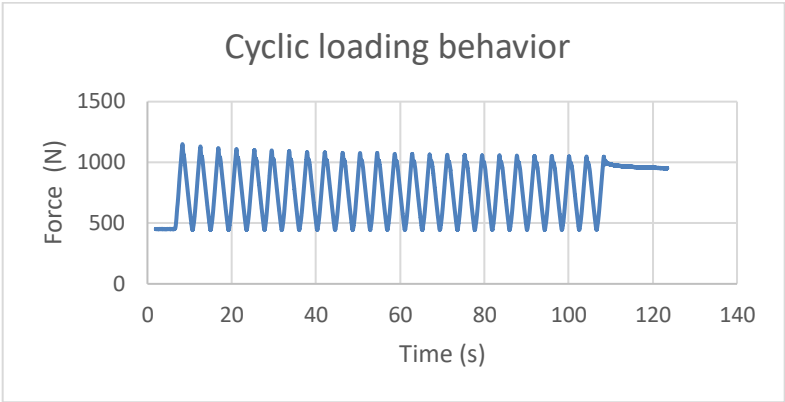

Figure 33: Cyclic loading pressure sensor data

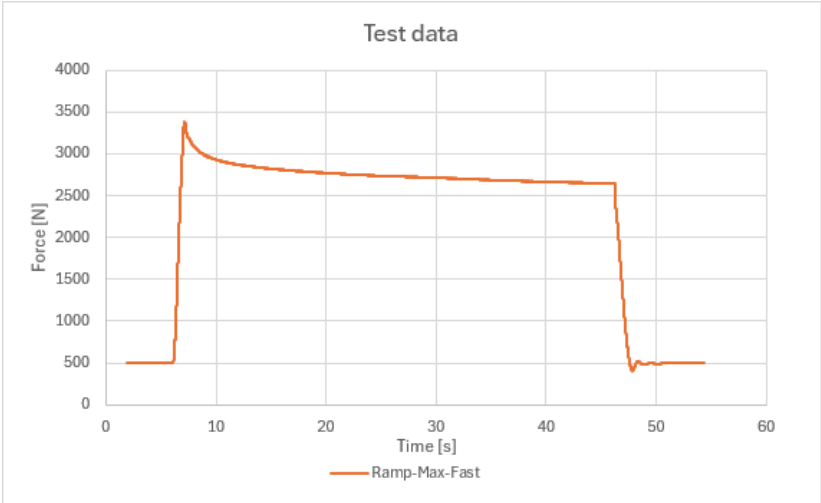

Figure 34: Max ramp rate pressure sensor data

6.2 Angle Sensor Testing

The angle sensor was initially a reflective design. It used a commercially available color sensor with a red-green-blue encoder wheel which proved successful. However, this method was too slow for any practical applications.

Another iteration after this involved using a transmissive design with a gradient wheel was used, by calibrating for the intensity at each of the 36 sectors. However, it encountered difficulties during transitions between white and black which registered as grey. A solution using direction of rotation to eliminate this problem was developed for the trade show. This design was ultimately not used due to the excessive calibration needed and an unfixable edge case.

6.3 Apparatus Testing

After the initial apparatus was constructed, testing began to confirm if it could perform all three modes: Free, Loaded, and Isometric Contraction. The initial prototype performed Free and Loaded modes with few faults. For the isometric contraction condition, there was observed bending in the board. This bending caused the belt that leads from the struts to transmission to become un-tensioned. This looseness caused the belt to skip (or move between teeth). This means we could not apply a maximum load on the machine without it malfunctioning.

To resolve this, the MDF board was reinforced by fastening parallel 2”x4” boards along the area of the board that experienced the most bending to increase the second moment of area. After the iteration, the apparatus could resist a much higher load. However, the same problem was experienced when exerting a greater force on the struts. Further iteration is necessary for reinforcing the board to meet the maximum required force.

7. Next Steps / Project Handoff

The next step of the project is to complete documentation for the handoff of the device to Carson Osmond, a graduate student researching within the biomechanics field at UIUC under Professor Kersh. This documentation includes the following: a performance procedure, sensor calibration technique, troubleshooting tips, assembly and disassembly procedures, the BOM, an “extra parts” BOM, 2D drawings, assembly drawings, STL files, the Fusion 360 project folder, research documentation, circuit diagrams, and commented MATLAB & Arduino Code.

The performance procedure explains how the lab technicians and subjects are to use the machine inside the MRI. It focuses on the three modes of use: Free Load, Applied Load, and Isometric Condition. Sensor calibration covers how to zero the force sensor and angle sensor to get accurate measurements during testing. The troubleshooting document explains adjustments and solutions for known dysfunctions of the dynamometer. The rest of the documents explain the assembly and creation of the components in the dynamometer.

The team is also planning future improvements to the project. The team will draft solutions for problems in an organized document. This will consist of reasons for improvement, projected material requirements, and possible issues with solutions. Drawings created for the handoff of the project are displayed in the Appendix.

8. Budget

The total cost for this project, which can be seen in Table 5, comes out to $3,833.53. Most

expenses come from the pressure sensor ($935), the acetal sheets ($614), the fiber optic cabling ($316), and machining ($900). These four expenses account for 71.5% of the total costs. The sponsors have communicated to the team an importance on the functionality of the device to ensure the dynamometer meets the specifications that have been given, so they have allowed the team to surpass the original $1,500 budget and opted for higher precision equipment. Some budget highlights of large expenditures are featured in Table 5 below, and a more detailed BOM can be found in the Appendix.

Table 5: Summarized BOM

Component	Subassembly	Vendor	Cost
Machining	General	Machine Shop	$900.00
Acetal Sheets Total	General	McMaster-Carr	$614.72
80 ft. Fiber Optic Cabling	Angle Sensor	Fiber Optic Products	$316.00
0-50 psi, 4-20 mA Pressure Gauge	Force Sensor	DwyerOmega	$935.83
Fasteners	General	McMaster-Carr	$209.07
Shafts, Dowels, Belts, Bearings	Apparatus	McMaster-Carr	$89.8
Circuit Components	Force, Angle Sensor	Digi-key	$310.92
Misc.	N/A	Misc.	$492.9
Total			$3,833.53

9. Conclusion and Recommendations

Over the 16-week semester, the MRI Dynamometer team created an MRI-compatible device that can measure the force and angle from the knee as a function of time, while synchronizing with the MRI to match it to imaging of the musculoskeletal system. This device can accommodate the 5th to 95th sized percentile of humans, corresponding to people that are 4’11” to 6’2” in height. The transmission can load up to 27 pounds on the user, which is within the 80th percentile based on typical human force values. This was not intended but deemed acceptable by the sponsors. Along with these specifications, the dynamometer operates in three main modes: isometric contraction, free-loaded movement, and loaded movement. The force and angle data measured from the device are read with $\pm$ 1 newton precision and 1º resolution for the full 0-55° range of knee flexion angle.

As this project is to be continued by Carson Osmond, there are design improvements that could

be made to reduce the number of limitations within the machine. These recommendations span the entire apparatus. For one, creating a bracing method for the knee or the upper body so that the user can stabilize themselves would improve comfort.

For the transmission, it is recommended to implement a pulley rather than the current rack and pinion. As discussed in the transmission section, the current solution is limited by geometry. A pulley system would have a smaller vertical form factor, which would be capable of providing enough displacement. It would involve swapping part of, if not all, the current transmission to get the mechanical advantage equal to that of the last peg on the strut. However, this would allow the subject to be able to see up to 50 lbs instead of the 27 lbs at their ankle.

Since there was observed bending with the MDF board during isometric contractions, a tensioned rope design underneath could oppose this motion. This will mitigate the issue if the board stays on the MDF. However, it is likely that the first components to fail on the board will be the MDF board, due to the nylon screw thread stripping. It is recommended to find better base boards in the future, including exploring different thicknesses of wood or even high strength plastics such as Polycarbonate.

Further quantification on the force sensor hysteresis should also be completed to understand potential noise in data and to find a better relaxation time. Additionally, it may be necessary to model where the applied forces on the sliding plate and model the cushioning as a spring mass damper system. Another solution to resolve hysteresis would be eliminating friction altogether with a rolling diaphragm joint replacing the plunger of the syringe.

Finally, the angle sensor's emitter line is a flashlight reliant on batteries. A main power supply would eliminate the need for charging, which interferes with light emission. The battery also decreases emitted intensity as it loses charge, which begins to throw off the diode thresholding logic.

This project would not be possible without a solid line of communication with the sponsors. This primarily involved ensuring the desired design and permission to exceed the initial budget to get high quality components. Purchasing higher quality parts enabled the design of a more reliable device which could properly meet the specifications.

Along with this, the access to the many resources available from the machine shop on campus, the Jackson Innovation Studio 3D printers, and the senior design studio assisted in completing this

project. Design for manufacture to simplify components also reduced time to completion and simplified analysis. Finally, the team's expectation of quality results, determination, and grit was crucial for success.

Including the range of studies that this knee dynamometer can be utilized for, our device may help towards diagnosing injuries and diseases more effectively. Integrating imaging with knee data can analyze knee behavior on a deeper level and study factors related to aging or during exercise. In all, the versatility of this creation will hopefully allow this type of device to become more widely used and for different applications because of the many capabilities that it offers.

Acknowledgements

The team would like to thank our sponsors Dr. Bruce Damon and Dr. Mariana Kersh for providing the funds necessary to be able to build the device and allowing the team to design towards the extents of this project, as well reassuring us with the direction of the project. We would also like to thank our faculty advisor Professor Callan Luetkemeyer and our project manager Kayla Smith for giving us guidance and support during each week all the way until the end of the semester. The team also extend thanks to Kyle Cheek and the rest of the Machine Shop for their quality work. We would also like to extend our gratitude to Professor Blake Johnson for his assistance and resources throughout the duration of the project. We are also thankful towards the MechSE machine shop for their extensive work towards our physical parts and for ensuring their quality. Lastly, we would like to thank Michael Focht for the advice towards the force sensor and testing the team, along with Carson Osmond for his help throughout the semester and taking on this project for his research.

References

[1] S. Raksha, "The Benefits of SPECT Scans for Accurate Diagnoses," *Kiran Lab*, Apr. 30, 2023. [Online]. Available: https://kiranpetct.com/the-benefits-of-spect-scans-for-accurate-diagnoses/

[2] Brisson, Nicholas M., Martin Krämer, Leonie A.N. Krahl, Alexander Schill, Georg N. Duda, and Jürgen R. Reichenbach. "A Novel Multipurpose Device for Guided Knee Motion and Loading during Dynamic Magnetic Resonance Imaging." *Zeitschrift Für Medizinische Physik* 32, no. 4

(November 2022): 500–513. https://doi.org/10.1016/j.zemedi.2021.12.002.

[3] D'Lima, Darryl D, Benjamin J Fregly, Shantanu Patil, Nikolai Steklov, and Clifford W Colwell. "Knee Joint Forces: Prediction, Measurement, and Significance." *Proceedings of the Institution of Mechanical Engineers, Part H: Journal of Engineering in Medicine* 226, no. 2 (February 2012): 95–102. https://doi.org/10.1177/0954411911433372.

[4] Šarabon, Nejc, Žiga Kozinc, and Mihael Perman. "Establishing Reference Values for Isometric Knee Extension and Flexion Strength." *Frontiers in Physiology* 12 (October 15, 2021): 767941. https://doi.org/10.3389/fphys.2021.767941.

[5] "The Evolution of Anthropometrics and User Control," HermanMiller.com. [Online]. Available: https://www.hermanmiller.com/research/categories/white-papers/the-evolution-of-anthropometrics-and-user-control/#:~:text=In%20this%20database%2C%20a%2095th,113%20pounds%20(51.26%

[6] M. A. McDowell, C. D. Fryar, C. L. Ogden, and K. M. Flegal, "Anthropometric Reference Data for Children and Adults: United States, 2003–2006," CDC.gov. [Online]. Available: https://www.cdc.gov/nchs/data/nhsr/nhsr010.pdf

[7] C. Gordon *et al.*, "988 ANTHROPOMETRIC SURVEY OF U.S. ARMY PERSONNEL: METHODS AND SUMMARY STATISTICS," Jul. 1990. [Online]. Available: http://tools.openlab.psu.edu/publicData/ANSUR-TR89-044.pdf

[8] "FORMULA SAE ANTHROPOMETRIC REFERENCE DATA 5TH PERCENTILE FEMALE & 95TH PERCENTILE MALE," FSAEOnline.com. [Online]. Available: https://www.fsaeonline.com/content/FSAE%20Rules95th_2016.pdf

[9] C. C. Gordon, "Anthropometric Data." [Online]. Available: https://multisite.eos.ncsu.edu/www-

ergocenter-ncsu-edu/wp-content/uploads/sites/18/2016/06/Anthropometric-Detailed-Data-Tables.pdf

[10] "ANTHROPOMETRY AND BIOMECHANICS," NASA.gov. [Online]. Available: https://msis.jsc.nasa.gov/sections/section03.htm

[11] D. A. Winter, *Biomechanics and motor control of human movement*, 4th ed. Hoboken, N.J: Wiley, 2009. doi: https://onlinelibrary.wiley.com/doi/epdf/10.1002/9780470549148

[12] Santini, Francesco, Oliver Bieri, and Xeni Deligianni. "OpenForce MR: A Low-cost Open-source MR-compatible Force Sensor." *Concepts in Magnetic Resonance Part B: Magnetic Resonance Engineering* 48B, no. 4 (October 2018): e21404. https://doi.org/10.1002/cmr.b.21404.

[13] "Human Body Part Weights," *robslink.com*. [Online]. Available: https://robslink.com/SAS/democd79/body_part_weights.htm

Appendix A: Contributions Table

Section	**Primary Author**
Title page	Daniel
Table of contents	Kaiden
Executive Summary	Brandon
Introduction	Jordan
Research	Jordan
Overview of final design:	
Knee mechanism overview	Jordan
Transmission overview	Matthew
Force sensor overview	Matthew
Angle sensor overview	Matthew
Design/Iteration:	
Knee mechanism design	Jordan, Brandon
Transmission design	Matthew
Force sensor design	Daniel
Angle sensor design	Jagriti
Sensing Circuit Design	Jagriti
Manufacturing	Kaiden
Testing:	
Force sensor testing	Matthew
Angle sensor testing	Jagriti
Apparatus testing	Kaiden
Next Steps/Project Handoff	Kaiden
Budget	Jordan
Conclusions & Recommendations	Brandon
Circuitry/Code design	Jagriti
Primary Editor	Daniel

Appendix B: Governing Equations

$$\tau_{lift} = F_{lift}/A_{peg} \tag{1}$$

$$F_{max} = \frac{T_{leg}}{L_{strut}} \tag{2}$$

$$F_{tension} = T_{leg}/R_{8''\ pulley} \tag{3}$$

$$\sigma_{bending} = Mc/I_{rod} \tag{4}$$

$$\sigma_{tooth} = Ft/BmY \tag{5}$$

$$P = \frac{F}{A} \tag{6}$$

Appendix C: Tables for Detailed Bill of Materials and Gear Selections

Table 6: Detailed bill of materials

Component	Subassembly	Vendor	Quantity	$/Unit	Total Cost
80 ft. Long Fiber Optic Cabling	Angle Sensor	Fiber Optic Products	1	$316	$316.00
M5 x 0.8 mm Thread, 0.5 mm Long Nylon Set Screws	Angle Sensor	McMaster-Carr	1	$6.57	$6.57
525 NM to18 Photodiode	Angle Sensor	DigiKey	1	$8.20	$8.20
1/4" Male Coupling, Quick Disconnect Tube Coupling	Force Sensor	McMaster-Carr	1	$15.42	$15.42
1/4" ID, 1/2" OD, 50 ft. Long PVC Plastic Tubing	Force Sensor	McMaster-Carr	1	$42.50	$42.50
0.5" ID, 1/2 ft. Long Heat-Shrink PVC Plastic Tubing	Force Sensor	McMaster-Carr	1	$4.48	$4.48
5/16" to 3/8" Double Snap-Grip Tube Clamps	Force Sensor	McMaster-Carr	1	$5.61	$5.61
12"x12", 1/2" Thick Acetal Sheet	Force Sensor	McMaster-Carr	1	$80.02	$80.02
1/4" Hose ID, 1/4 NPTF Female Brass Barbed Hose Fitting	Force Sensor	McMaster-Carr	1	$19.51	$19.51
1" Wide, 6 ft. Long Cinching Strap	Force Sensor	McMaster-Carr	1	$6.36	$6.36
2" Wide, 6 ft. Long Cinching Strap	Force Sensor	McMaster-Carr	1	$12.00	$12.00
0-50 psi, 4-20 mA Pressure Gauge	Force Sensor	DwyerOmega	1	$935.83	$935.83
1/4" Female Coupling, Quick Disconnect Tube Coupling	Force Sensor	McMaster-Carr	1	$15.42	$15.42

53055K131 High-Temp. Barbed Tube Fitting for 1/4"x3/16" Tube ID	Force Sensor	McMaster-Carr	1	$3.26	$3.26
5372K514 Barbed Air/Water Hose Reducer for 1/4"x3/16" Tube ID	Force Sensor	McMaster-Carr	1	$6.00	$6.00
15/32" to 17/32" Double Snap-Grip Tube Clamps	Force Sensor	McMaster-Carr	1	$15.37	$15.37
250 Ohm Resistor	Force Sensor	DigiKey	1	$7.22	$7.22
200 Ohm Resistor	Force Sensor	DigiKey	1	$0.82	$0.82
12-bit ADC	Force Sensor	DigiKey	2	$9.95	$19.90
14V, 9.8W DC Power Supply	Force Sensor	DigiKey	2	$9.95	$19.90
Arduino Nano Every	Force Sensor	DigiKey	1	$14.70	$14.70
Female Barrel Connector Jack	Force Sensor	DigiKey	1	$0.60	$0.60
3-Pack 550 mL Syringes	Force Sensor	Amazon (A AKRAF)	1	$19.99	$19.99
12"x24", 1/4" Thick Acetal Sheet	Knee Apparatus	Innovation Studio	5	$20.00	$100.00
1' Long, 1/2" Diameter Birch Dowel Rod	Knee Apparatus	Innovation Studio	1	$0.50	$0.50
1" Long, 1/4"-20 Nylon Screws (100 pcs.)	Knee Apparatus	McMaster-Carr	1	$15.32	$15.32
1/4"-20 Nylon Hex Nuts (100 pcs.)	Knee Apparatus	McMaster-Carr	1	$13.24	$13.24
12"x24", 1/2" Thick Acetal Sheet	Knee Apparatus	McMaster-Carr	2	$141.47	$282.94
12"x12", 1" Thick Acetal Sheet	Knee Apparatus	McMaster-Carr	1	$150.76	$150.76
1-3/4" Long, 1/4"-20 Nylon Screws (100 pcs.)	Knee Apparatus	McMaster-Carr	1	$14.15	$14.15
1/2" Diameter, 4 ft. Long Carbon Fiber Shaft	Transmission	McMaster-Carr	2	$59.86	$119.72
Timing Belt	Transmission	McMaster-Carr	2	$51.85	$103.70
Vinyl Coated Cement Weight Plates-100 lbs	Transmission	Amazon (CAP Barbell)	1	$79.99	$79.99
1/4" ID Plastic Ball Bearing	Transmission	McMaster-Carr	6	$10.13	$60.78
3/8" ID Plastic Ball Bearing (Belt Tensioner)	Transmission	McMaster-Carr	4	$11.25	$45.00
2" Long, 10-32 Thread Size Brass Screws (25 pcs.)	Transmission	McMaster-Carr	1	$15.11	$15.11
1.25" Long, 10-32 Thread Size Brass Screws (50 pcs.)	General	McMaster-Carr	1	$15.88	$15.88

10-32 Brass Hex Nuts (100 pcs.)	General	McMaster-Carr	1	$11.39	$11.39
1/2" ID Plastic Ball Bearing	General	McMaster-Carr	6	$12.34	$74.04
Machining	General	Machine Shop	1	$900.00	$900.00
MDF Sheet	General	Home Depot	1	$48.98	$48.98
3/4" Diameter, 5ft. Long Acetal Rod	General	McMaster-Carr	1	$17.70	$17.70
1/2" Diameter, 5 ft. Long Acetal Rod	General	McMaster-Carr	1	$9.20	$9.20
3/4" Long, Number 10 Size Brass Wood Screws	General	McMaster-Carr	1	$13.04	$13.04
4"x4" x 8 ft. Pine Board	General	Home Depot	1	$13.08	$13.08
2"x4" x 8 ft. #2 Pressure-Treated Lumber	General	Home Depot	1	$4.58	$4.58
2'x6', 1" Thick Polyurethane Padding	General	Amazon (Amylove)	1	$29.99	$29.99
76"x25"x0.75" NBR Foam Padding	General	Amazon (Wakeman)	1	$36.00	$36.00
3D Printing Costs (PLA, PETG)	General	Innovation Studio	NA	$82.76	$82.76
				Total	$3,833.53

Table 7: Gear selection table

Teeth	Diameter [in]	pitch	Pressure angle [deg]	Stress [PSI]	Factor of safety for acetal (used 10,500 PSI)	Discrete angle increments per tooth
40	4	10	25	5,487.46	1.91	4.5 deg
48	4	12	20	7,668.553	1.369	3.75 deg
50	5	10	25	4,296.56	2.44	3.59 deg
60	5	12	25	5,155	2.036	3
60	6	10	25	3,469	3.026	3
72	6	12	25	4,079	2.57	2.5

70	7	10	25	2,943	3.56669	2.57
84	7	12	25	3,414	3.07	2.14
80	8	10	25	2,460.26	4.26	2.25
96	8	12	25	2,952.3	3.55	1.875

Appendix D: Project Handoff CAD Drawings

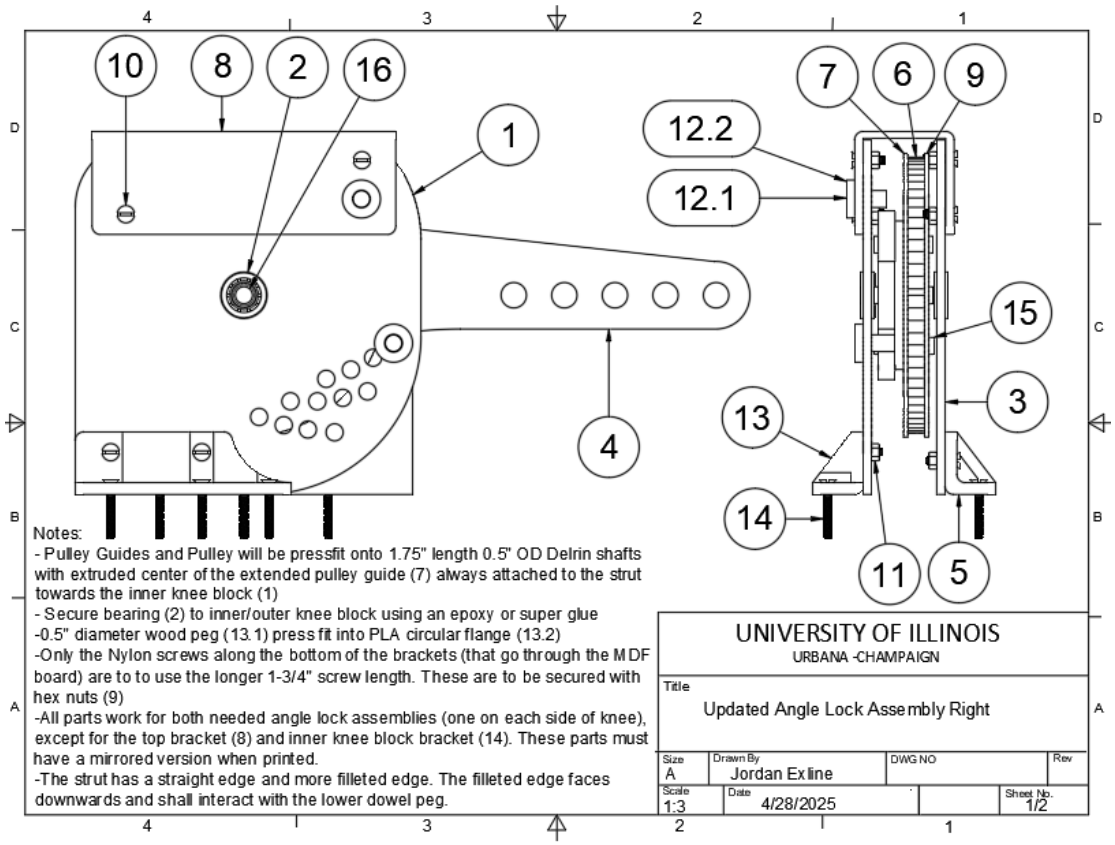

Figure 35: Knee mechanism CAD drawing

PARTS LIST

ITEM	QTY	PART NUMBER
1	1	INNER KNEE JOINT BLOCK NEW
2	2	6455K74_PLASTIC BALL BEARING
3	1	KNEE JOINT BLOCK OUTER BLOCK
4	1	STRUT NEW
5	1	KNEE JOINT OUTER BRACKET TOLERANCED
6	1	8 IN PULLEY GEAR
7	1	8 IN. PULLEY GUIDE WITH EXTENDER
8	1	TOP BRACKET INITIAL CONCEPT TOLERANCED
9	1	8 IN. PULLEY GUIDE
10	11	92929A226_NYLON SLOTTED FLAT HEAD SCREWS
11	9	94812A116_NYLON HEX NUT
12	2	ACETAL PEG ASSEMBLY
12.1	1	ACETAL PEG
12.2	1	ANGLE PEGS TOLERANCED FLANGE
13	1	KNEE JOINT INNER BRACKET TOLERANCED
14	6	94605A357_NYLON SLOTTED FLAT HEAD SCREWS
15	4	IN® ACETAL ROD CUT TO 1.75"
16	1	8572K55_WHITE DELRIN® ACETAL RESIN ROD

UNIVERSITY OF ILLINOIS
URBANA -CHAMPAIGN

Title
Updated Angle Lock Assembly Right

Size	Drawn By	DWG NO	Rev
A	Jordan Exline		
Scale 1:3	Date 4/28/2025		Sheet No. 2/2

Figure 36: Knee mechanism parts list CAD drawing

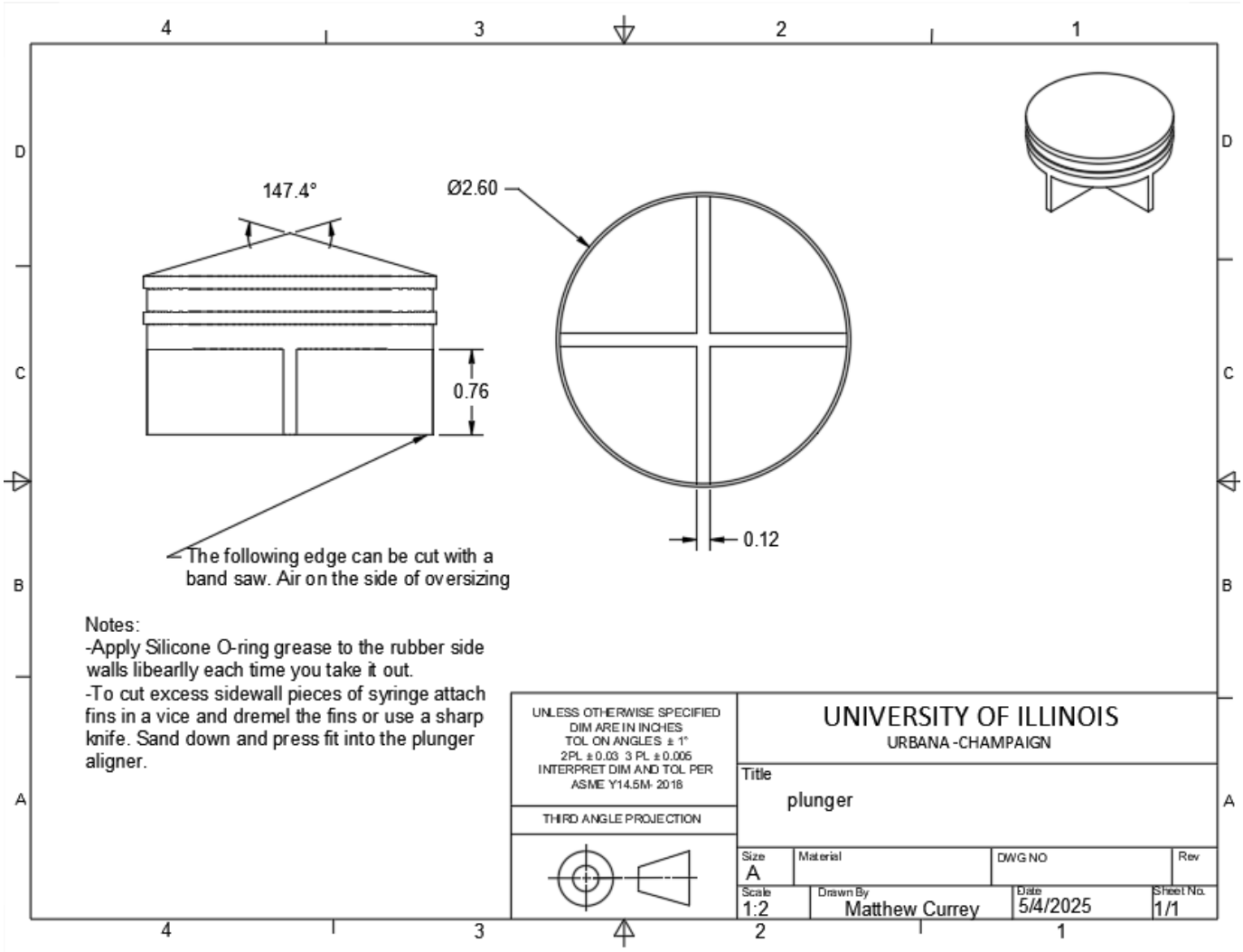

Figure 37: Plunger CAD drawing

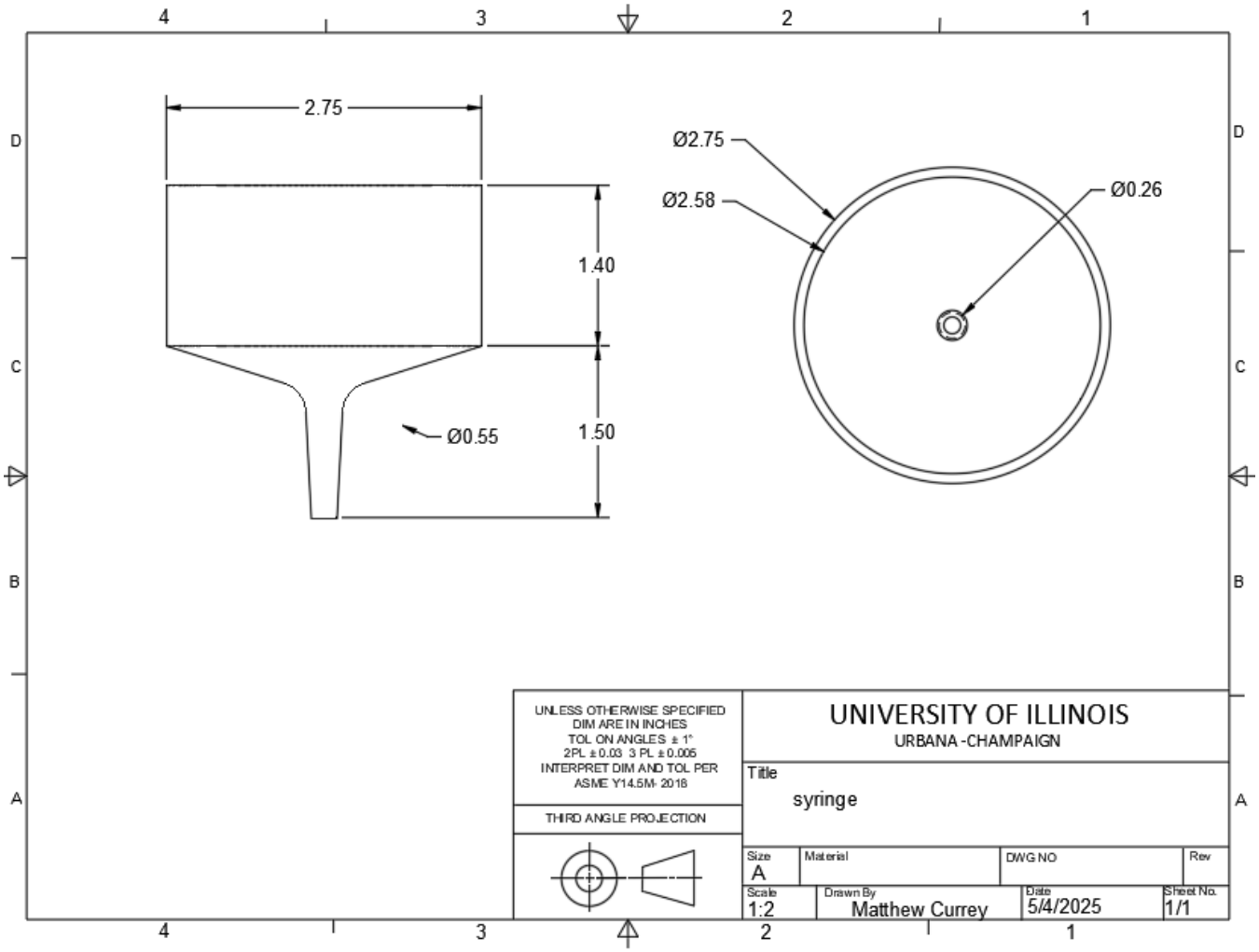

Figure 38: Syringe CAD drawing

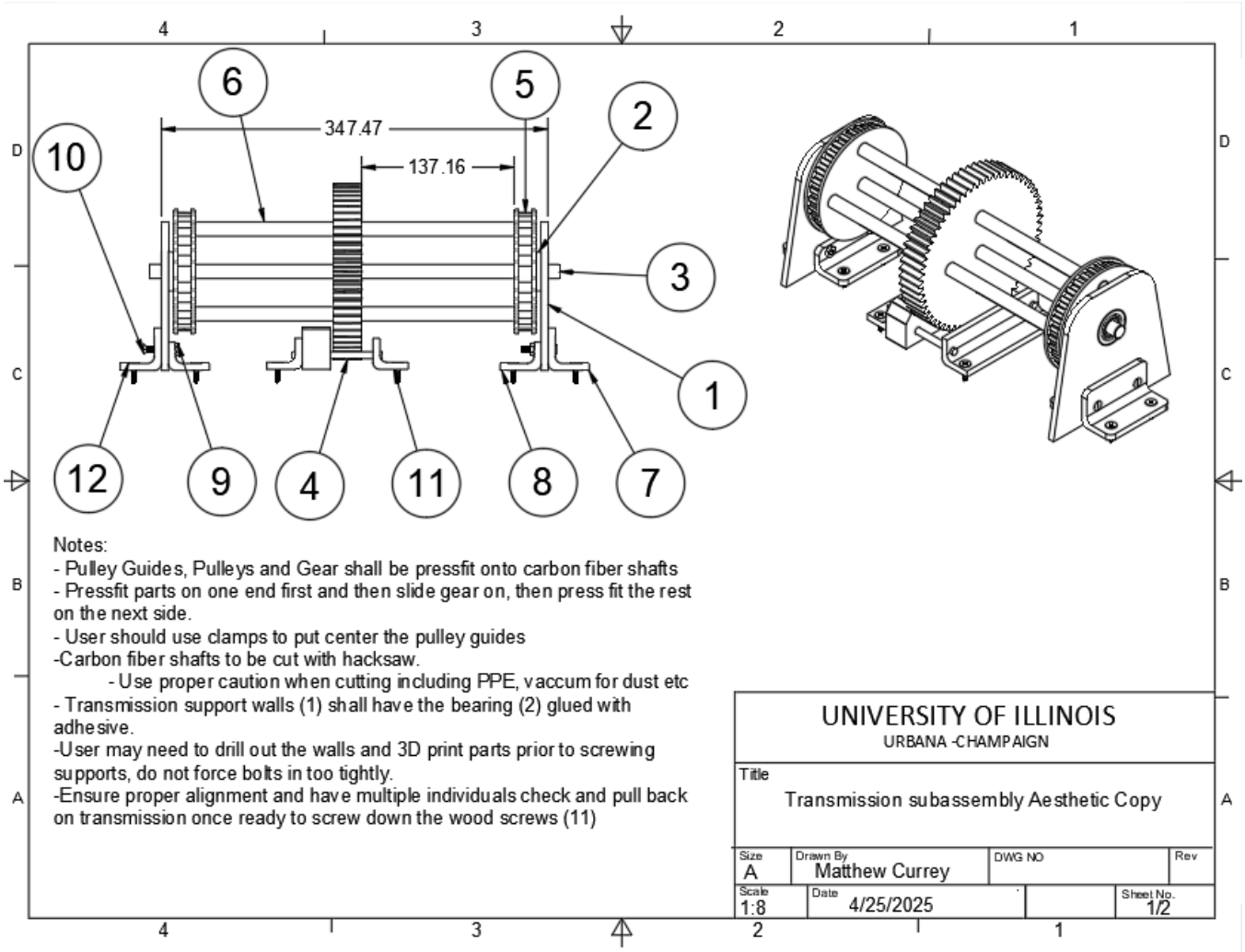

Figure 39: Transmission CAD drawing

PARTS LIST		
ITEM	QTY	PART NUMBER
1	2	TRANSMISSION SUPPORT
2	2	6455K74_PLASTIC BALL BEARING
3	1	2153T58_CARBON FIBER
4	1	60TOOTH 6INCH GEAR 10 PITCH
5	2	4INCH PULLEY SUBASEMBLY
6	4	2153T58 WITH CUT TO MAKE 10.3" NEED TO FIGURE OUT WALL SPACE
7	2	L BRACKET OUTTER
8	2	L BRACKET INNER
9	4	92671A195_BRASS HEX NUT
10	4	92451A835_BRASS SLOTTED FLAT HEAD SCREW
11	1	SPLINE SUBASEEMBLY
12	12	92114A245_BRASS PHILLIPS FLAT HEAD SCREWS FOR WOOD

UNIVERSITY OF ILLINOIS
URBANA-CHAMPAIGN

Title: Transmission subassembly Asthetic Copy

Size: A | Drawn By: Matthew Currey | DWG NO | Rev

Scale | Date: 4/25/2025 | Sheet No. 2/2

Figure 40: Transmission parts list CAD drawing

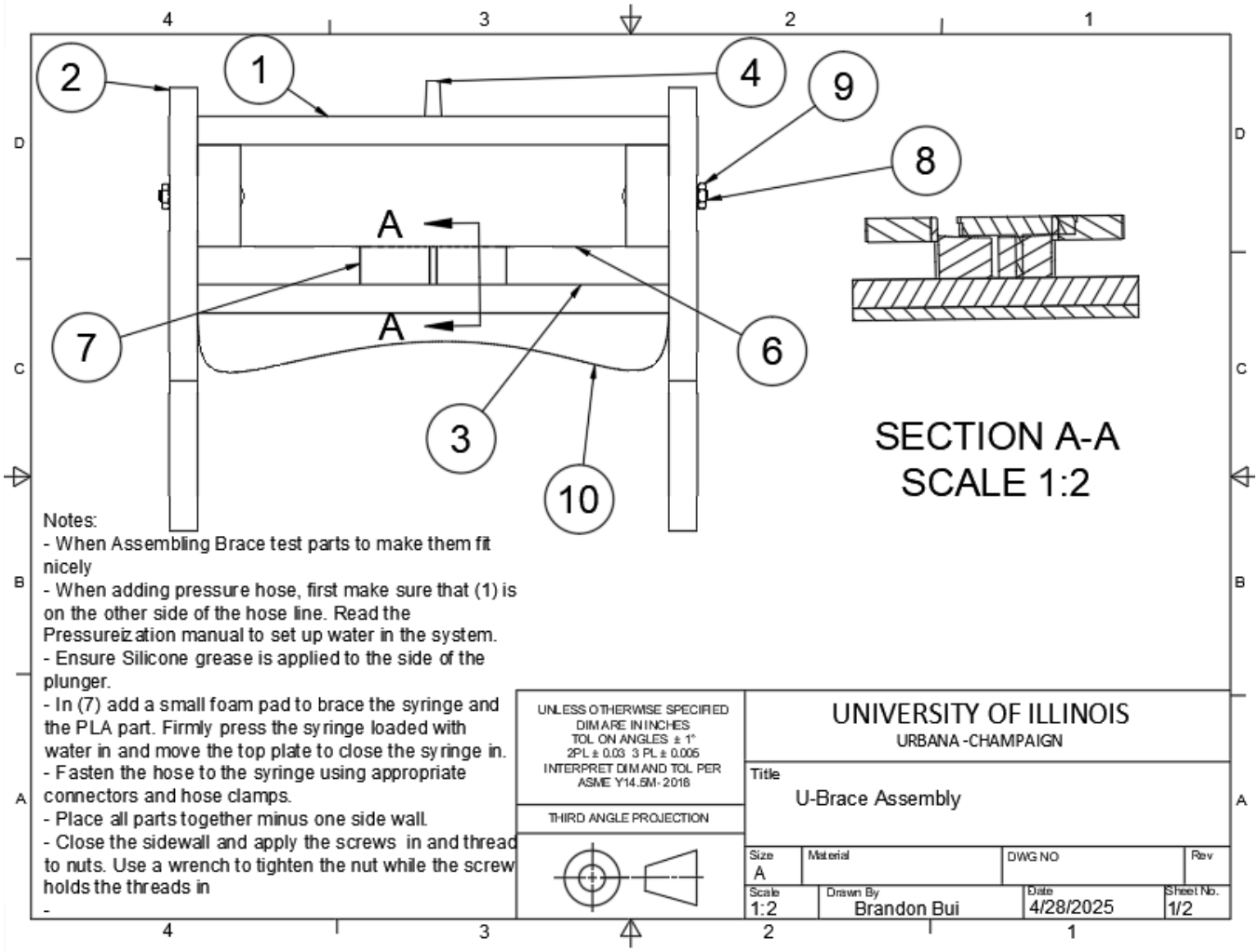

Figure 41: U-brace CAD drawing

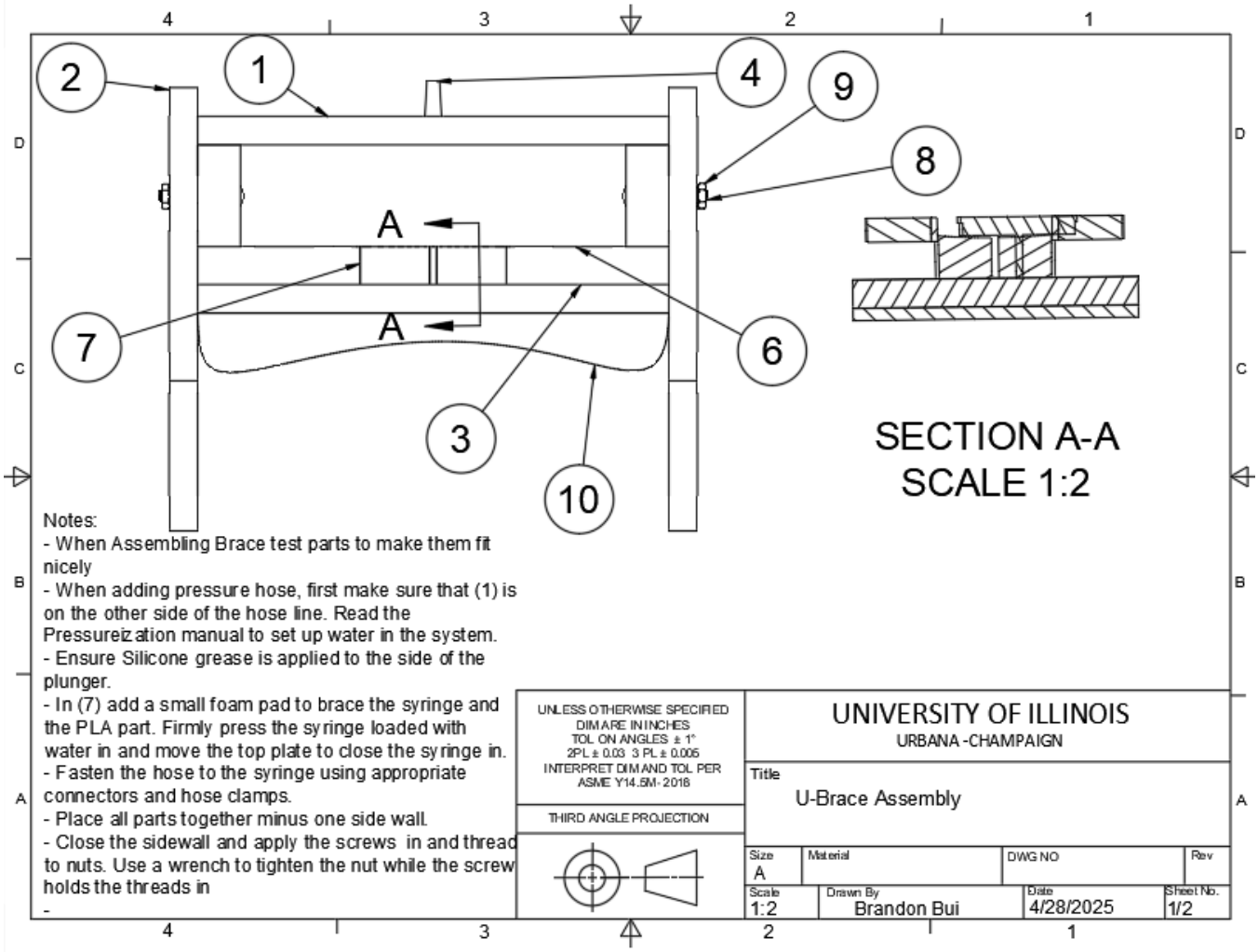

Figure 42: U-brace parts list CAD drawing

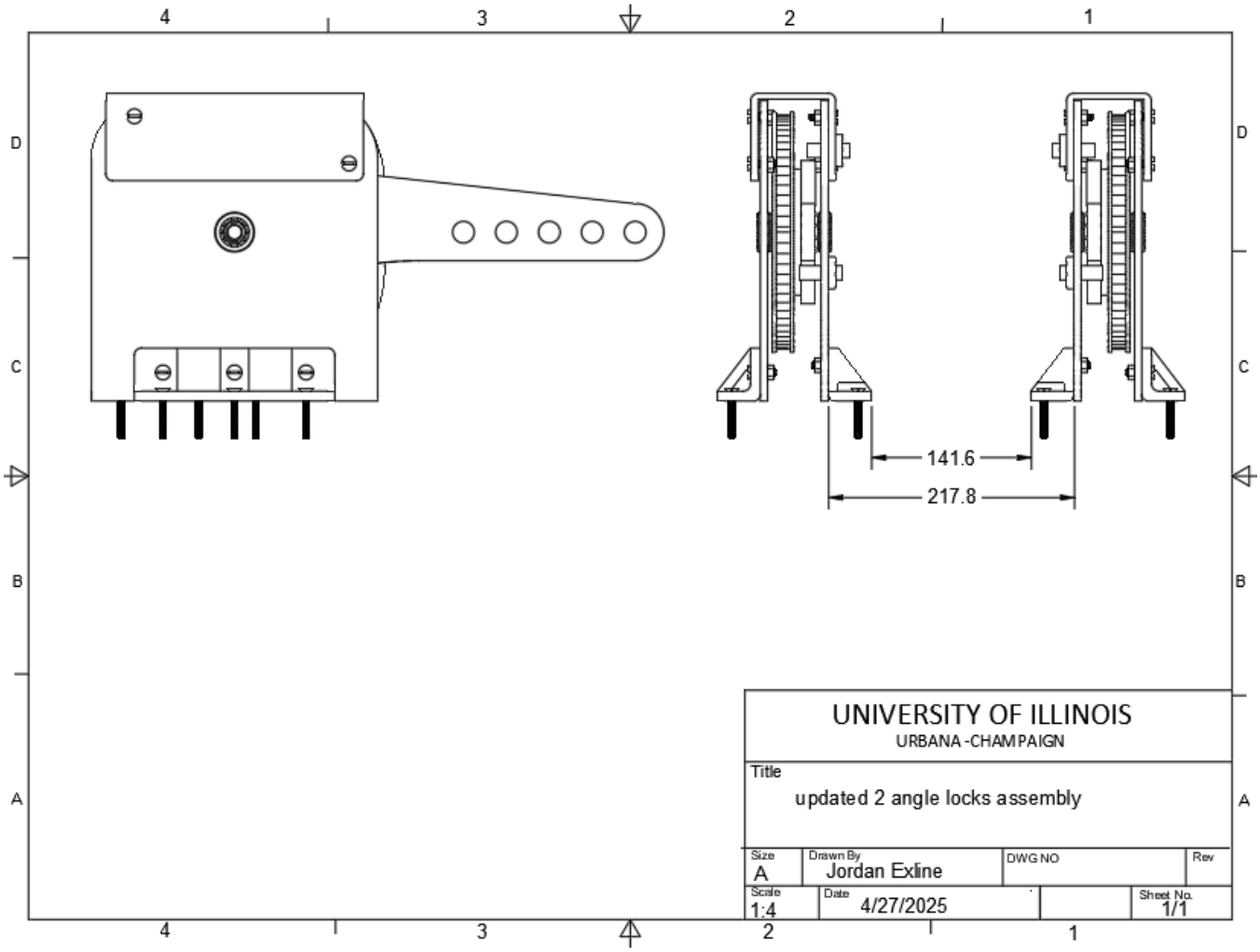

Figure 43: Angle lock assembly CAD drawing

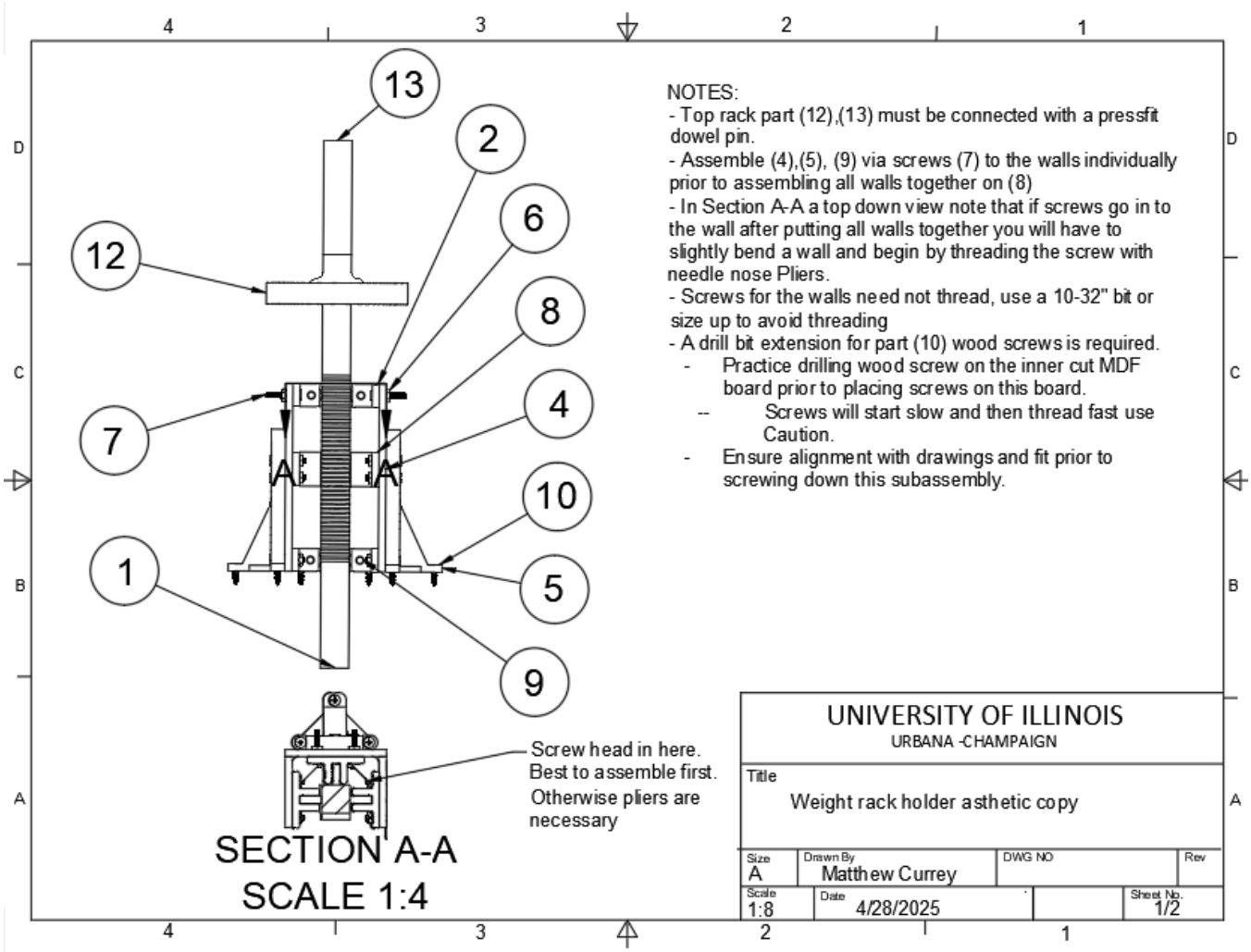

Figure 44: Weight rack holder CAD drawing

PARTS LIST		
ITEM	QTY	PART NUMBER
1	1	RACK FOR 6" GEAR P10
2	6	RACK AND PINNION PIECE
3	1	TRANSMISSION SUPPORT BACK
4	2	TRANSMISSION SUPPOR SIDE
5	3	SUPPORT WALLS
6	18	92671A195_BRASS HEX NUT
7	18	92451A835_BRASS SLOTTED FLAT HEAD SCREW
8	1	U SUPPORT
9	6	DOWEL FOR RACK SUPPORT
10	9	92114A245_BRASS PHILLIPS FLAT HEAD SCREWS FOR WOOD
12	1	WEIGHT RACK TAKE 2
13	1	CONCENTRIC DOWEL PIN TOP FOR WEIGHT RACK HOLDER

UNIVERSITY OF ILLINOIS
URBANA-CHAMPAIGN

Title: Weight rack holder asthetic copy

Size	Drawn By	DWG NO	Rev
A	Matthew Currey		
Scale 1:8	Date 4/28/2025		Sheet No. 2/2

Figure 45: Weight rack holder parts list CAD drawing

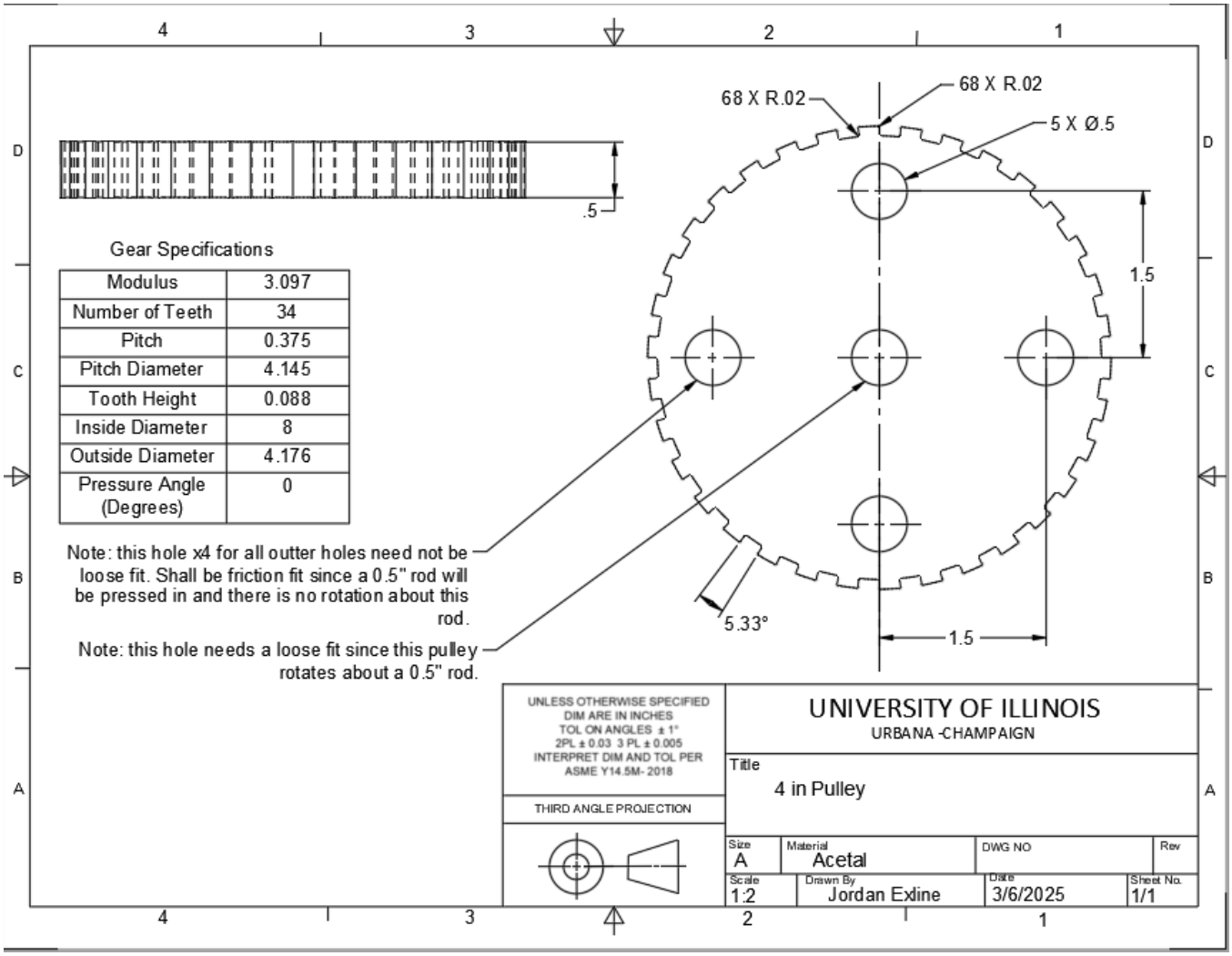

Figure 46: 4-inch pulley CAD drawing

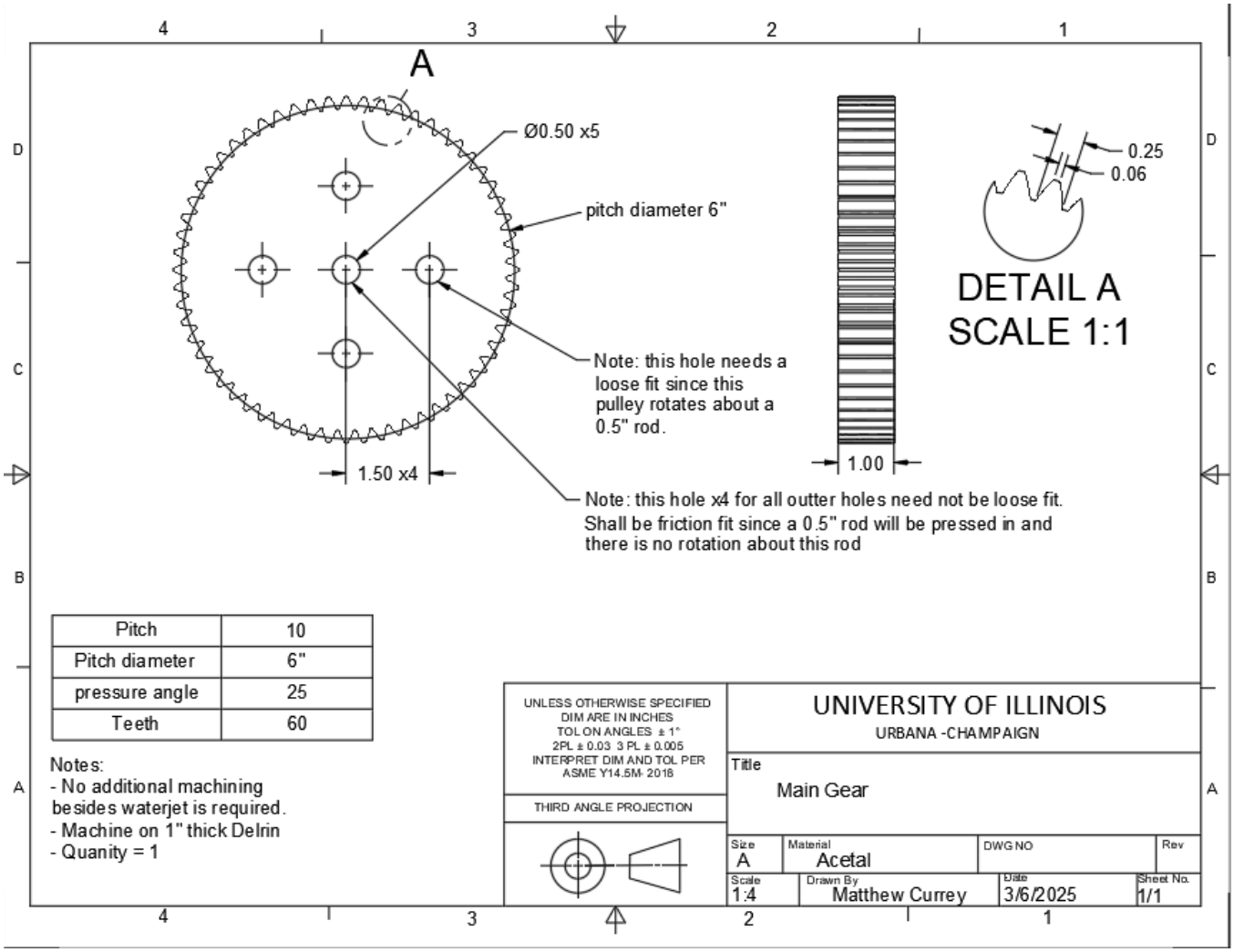

Figure 47: Main gear CAD drawing

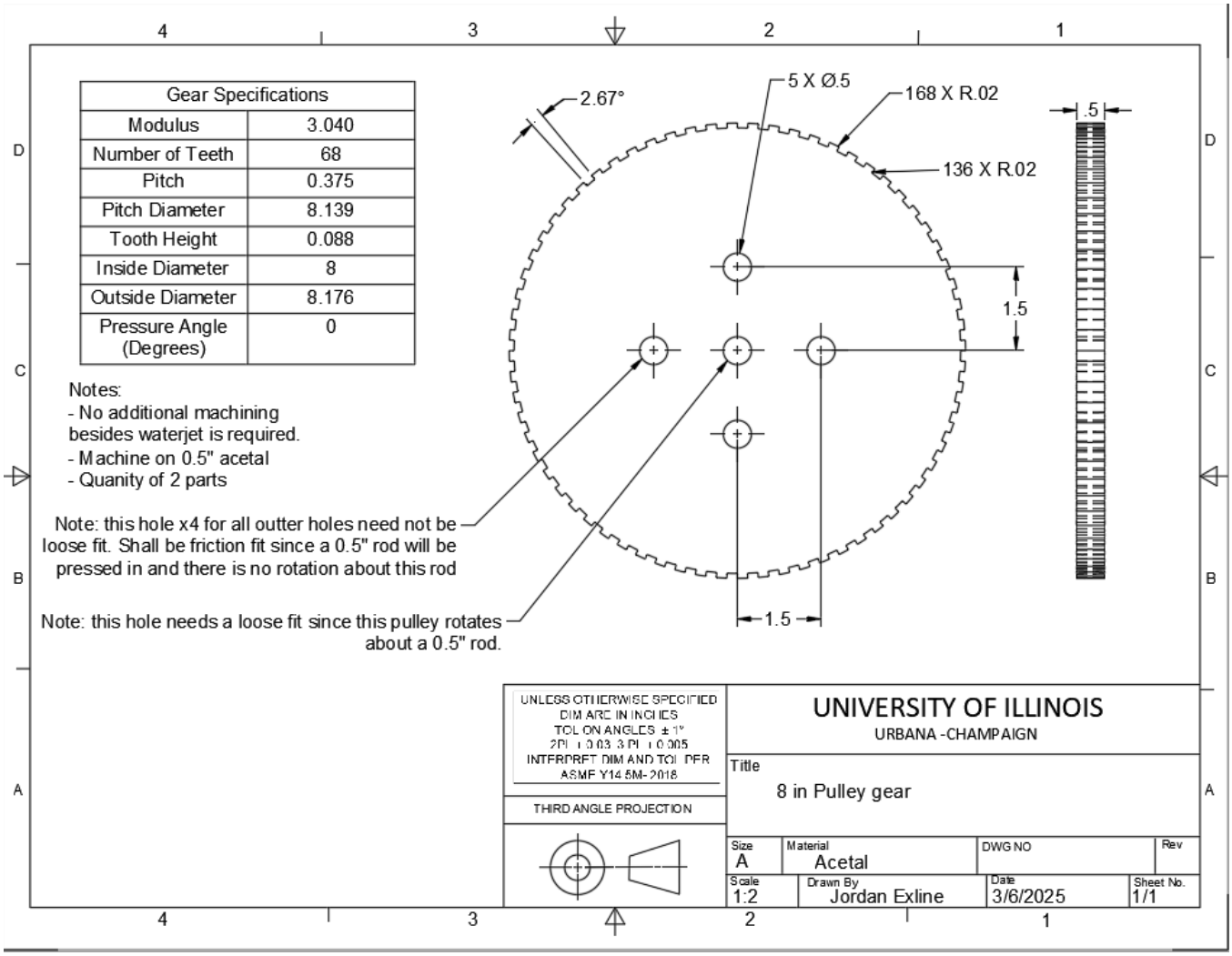

Figure 48: 8-inch pulley gear CAD drawing

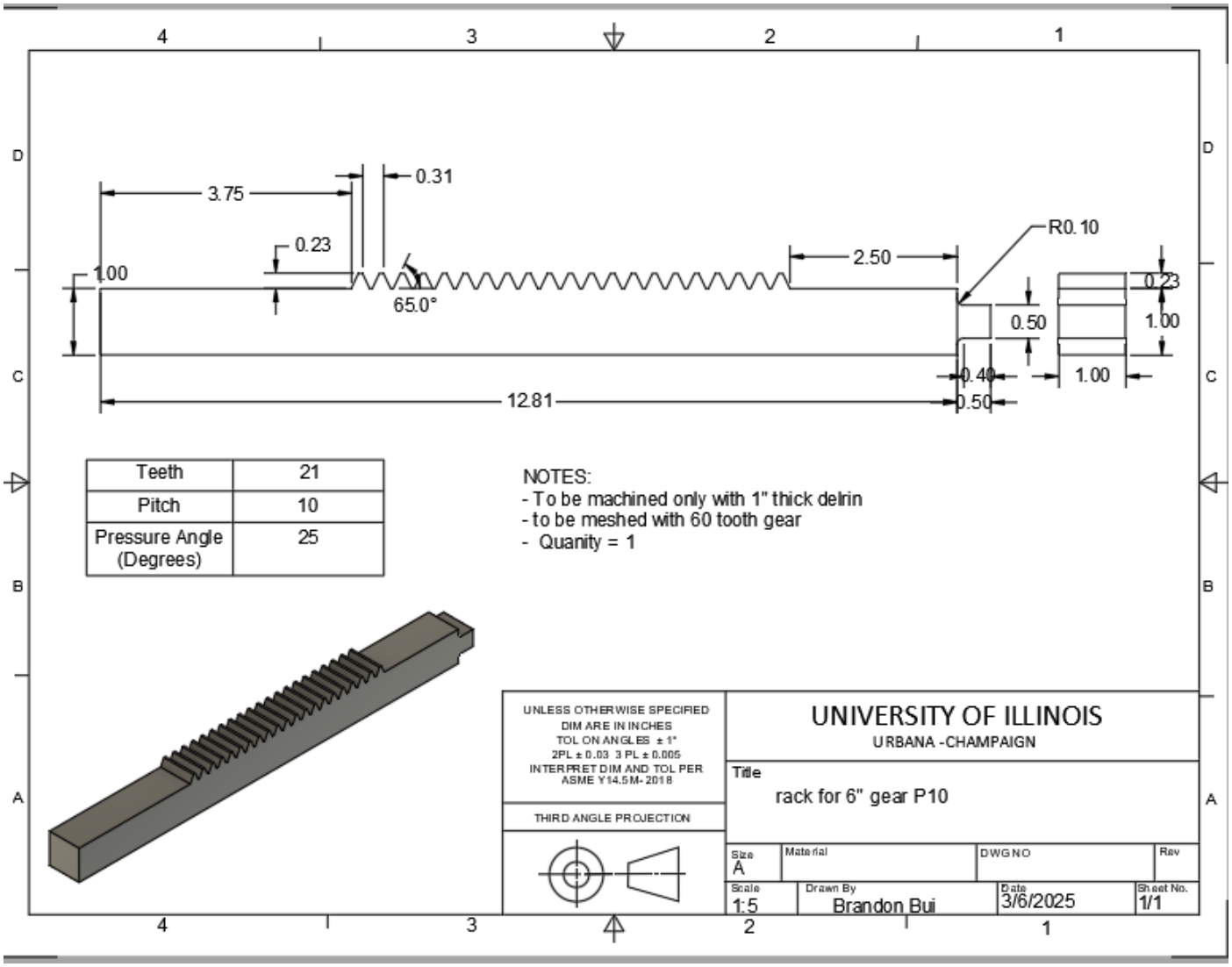

Figure 49: transmission rack CAD drawing

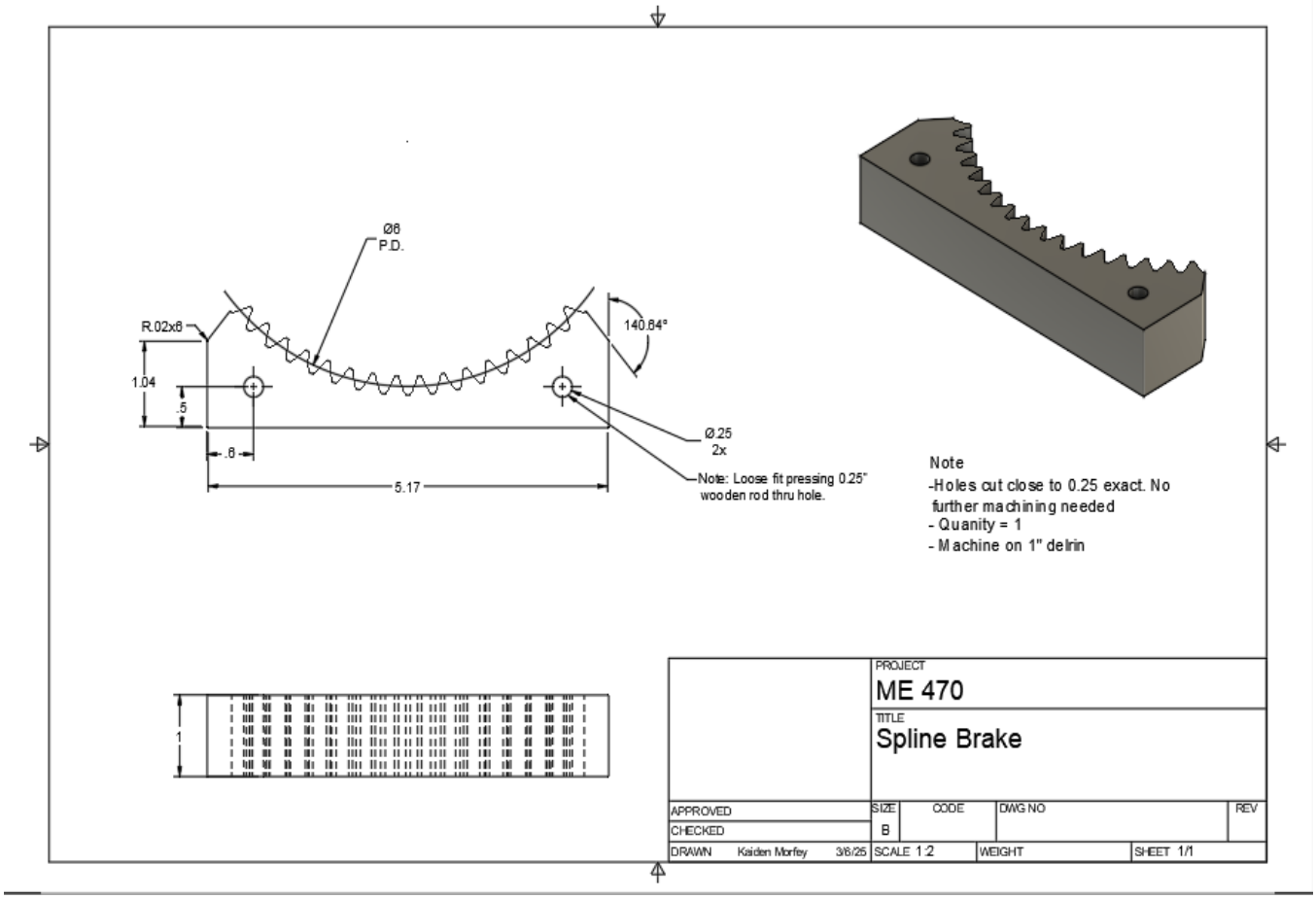

Figure 50: Spline brake CAD drawing

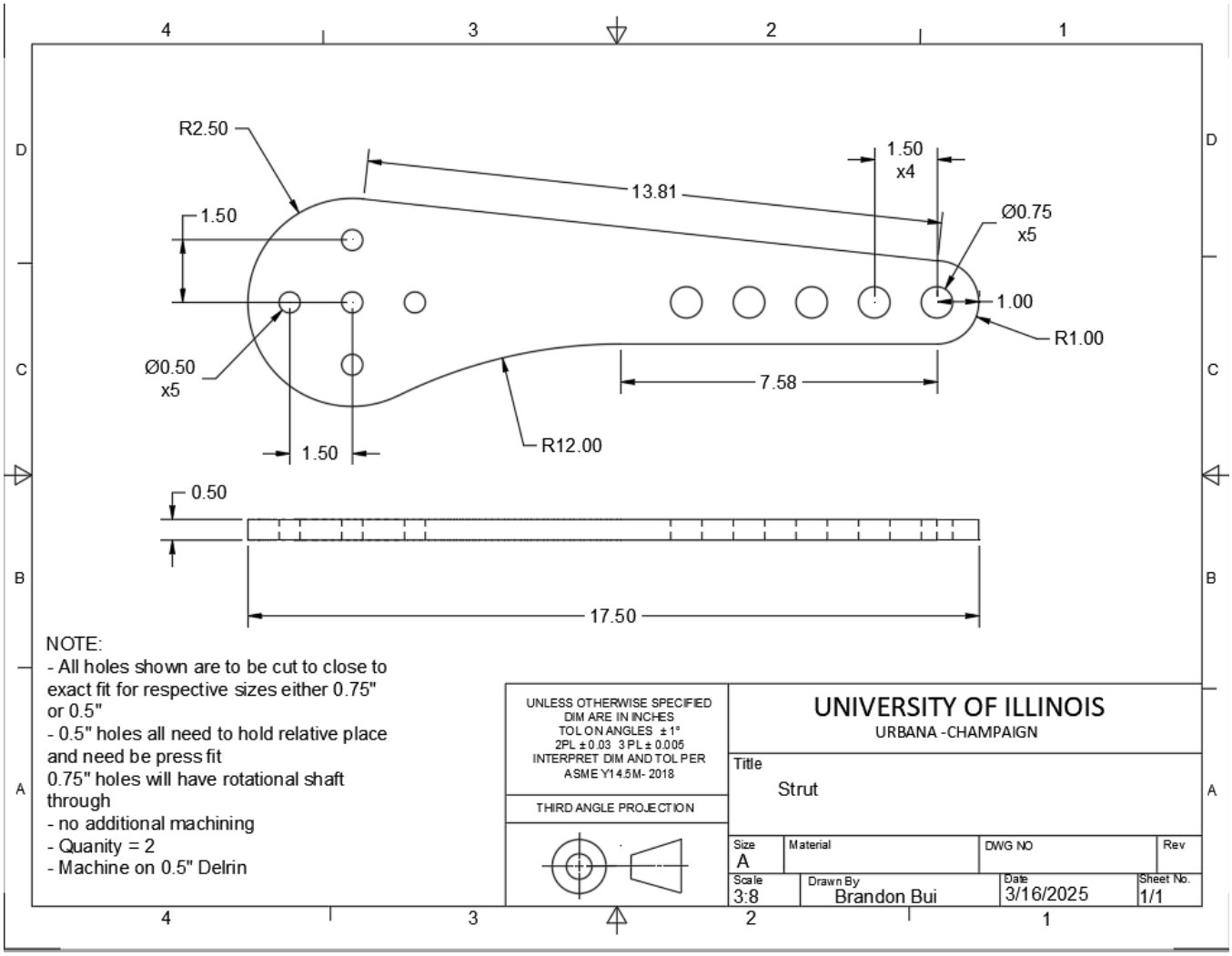

Figure 51: Leg strut CAD drawing

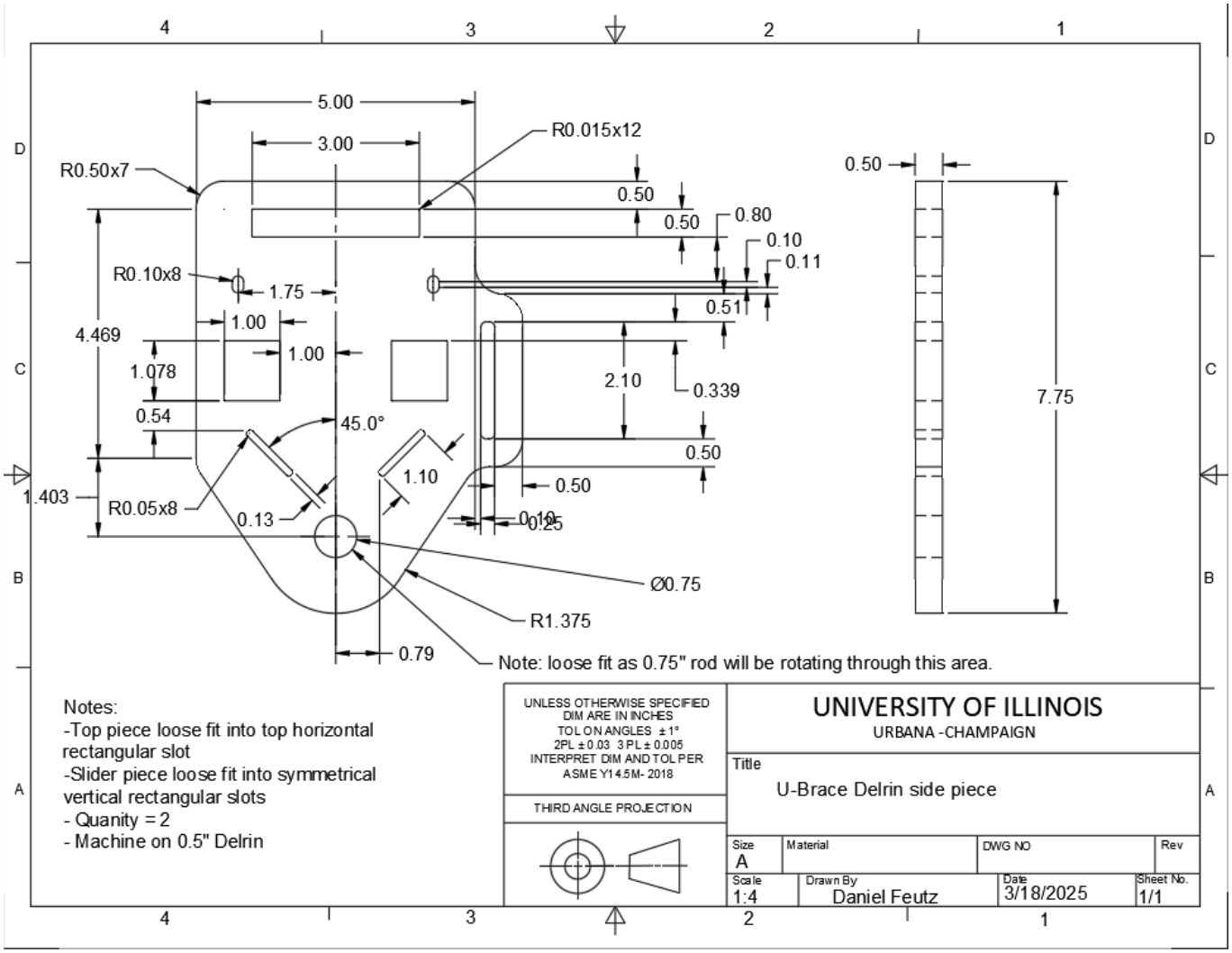

Figure 52: U-brace side piece CAD drawing

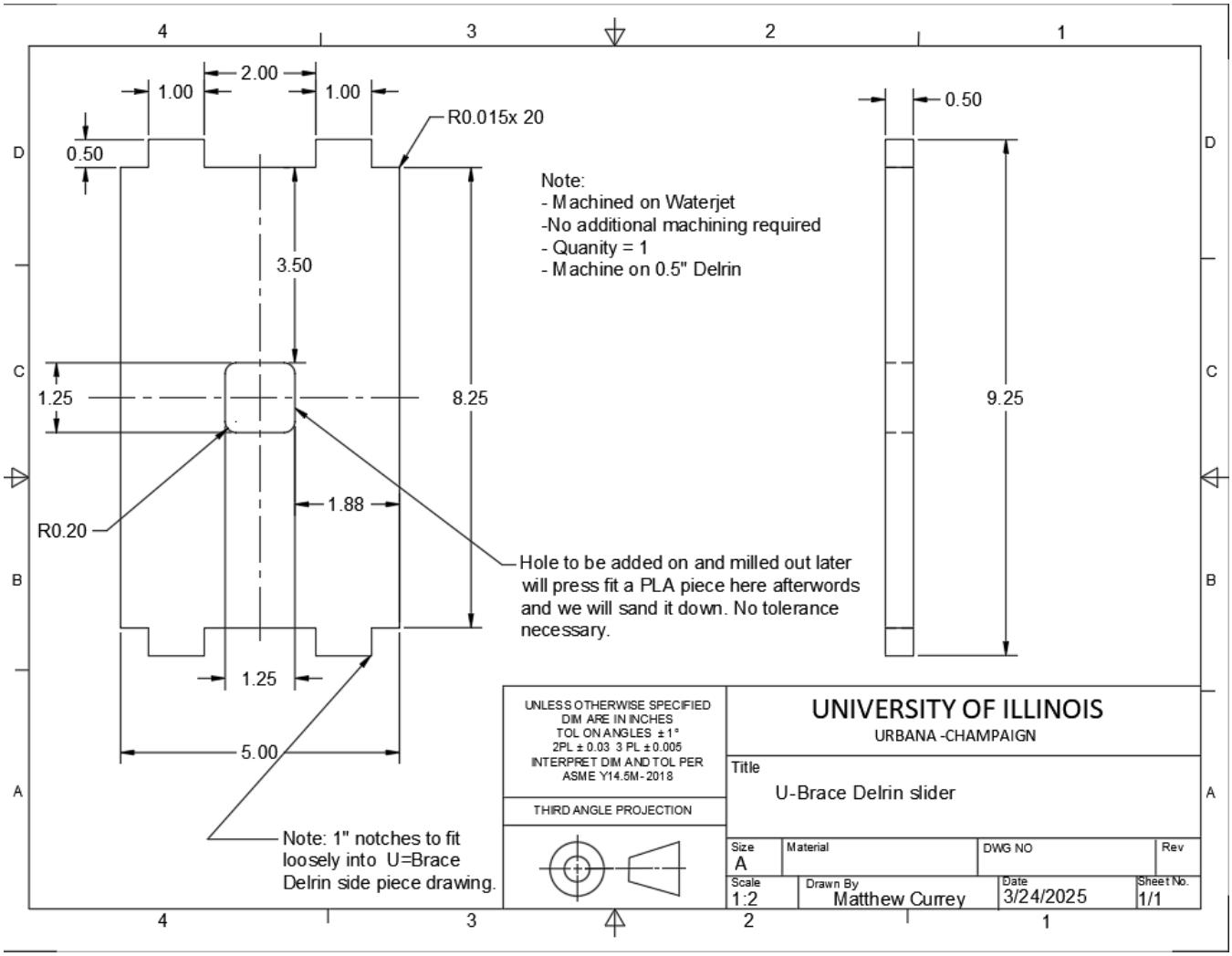

Figure 53: U-brace sliding piece CAD drawing

Appendix E: Decision Matrix Tables for Components

Table 8: Angle Measurement Selection Matrix (Weighted Average Combinations)							
		Concept			Weighted Rating		
PDS Spec	Weight Factor	1. Fluid Height	2. Fiber-Optics	3. Pneumatic System	1	2	3
1. Ease of Testing	5	2.92	3.75	2.92	14.58	18.75	14.58
2. Time to	4	2.56	2.33	2.44	10.22	9.33	9.78

Prototype							
3. Cost	4	2.44	2.56	2.89	9.78	10.22	11.56
4. Background Knowledge	3	1.92	1.75	1.83	5.75	5.25	5.50
5. Simplicity	4	2.33	2.44	2.78	9.33	9.78	11.11
6. Performance	4	2.22	3.22	2.22	8.89	12.89	8.89
7. Quality	5	2.78	3.89	2.92	13.89	19.44	14.58
8. Materials	5	3.33	3.47	3.61	16.67	17.36	18.06
9. Size	1	0.67	0.81	0.61	0.67	0.81	0.61
10. Safety	3	2.33	2.50	2.42	7.00	7.50	7.25
11. Ergonomics	4	2.89	3.22	3.00	11.56	12.89	12.00
12. Continuity Bonus Points	5	0.00	0.69	0.69	0.00	3.47	3.47
				Total	108.33	127.69	113.9

Table 9: Force Measurement Selection Matrix (Weighted Average Combinations)

						Weighted Rating			
		1. Plate Bag	2. Pneumatic Bag Ankle	3. Fiber Optic Pull Scale	4. Open-Source Load Cell	1	2	3	4
PDS Spec	Weight Factor								
1. Ease of Testing	5.00	4.67	4.83	4.67	4.17	23.33	24.17	23.33	20.83

2. Time to Prototype	4.00	4.17	4.00	3.67	5.00	16.67	16.00	14.67	20.00
3. Cost	4.00	4.67	4.67	4.17	4.83	18.67	18.67	16.67	19.33
4. Background Knowledge	3.00	4.00	3.83	3.67	5.00	12.00	11.50	11.00	15.00
5. Simplicity	4.00	4.00	4.00	3.33	5.00	16.00	16.00	13.33	20.00
6. Performance	4.00	4.00	4.17	4.33	5.00	16.00	16.67	17.33	20.00
7. Quality	5.00	4.00	4.00	4.33	4.83	20.00	20.00	21.67	24.17
8. Materials	5.00	4.50	4.33	3.83	4.50	22.50	21.67	19.17	22.50
9. Size	1.00	4.17	4.83	4.67	4.50	4.17	4.83	4.67	4.50
10. Safety	3.00	5.00	5.00	5.00	4.00	15.00	15.00	15.00	12.00
11. Ergonomics	4.00	4.67	5.00	4.83	4.17	18.67	20.00	19.33	16.67
					Total	183.00	184.5	176.2	195.0

Table 10: Static Loading Selection Matrix (Weighted Average Combinations)

PDS Spec	Weight Factor	1. Pulley	2. Rope/Pneumatic	3. German (Gears)	4. Load cell (Different Types)	1	2	3	4
1. Ease of Testing	5.00	3.83	3.83	4.67	4.33	19.17	19.17	23.33	21.67
2. Time to Prototype	4.00	4.17	3.17	4.67	4.00	16.67	12.67	18.67	16.00
3. Cost	4.00	3.67	3.50	4.67	3.67	14.67	14.00	18.67	14.67
4. Background	3.00	5.00	3.83	5.00	4.00	15.00	11.50	15.00	12.00

Knowledge									
5. Simplicity	4.00	4.67	3.17	4.50	3.83	18.67	12.67	18.00	15.33
6. Performance	4.00	4.50	3.50	5.00	4.33	18.00	14.00	20.00	17.33
7. Quality	5.00	4.50	3.83	4.67	4.50	22.50	19.17	23.33	22.50
8. Materials	5.00	3.83	3.67	4.67	4.33	19.17	18.33	23.33	21.67
9. Size	1.00	2.67	2.83	3.67	3.83	2.67	2.83	3.67	3.83
10. Safety	3.00	4.67	5.00	5.00	4.83	14.00	15.00	15.00	14.50
11. Ergonomics	4.00	4.67	4.33	4.67	4.83	18.67	17.33	18.67	19.33
12. Continuity Bonus Points	5.00	0.00	0.00	0.00		0.00	0.00	0.00	0.00
					Total	179.2	156.7	197.7	178.8

Table 11: Leg Brace Selection Matrix (Weighted Average Combinations)

PDS Spec	Weight	1.	2. 4-Bar	3. Pillow-Moving	4. Pillow Non-Moving	1	2	3	4
	Factor	Push	Linkage						
		Bar							
1. Ease of Testing	5	4.67	4.83	4.33	4.83	23.33	24.17	21.67	24.17
2. Time to Prototype	4	4.17	4	4.5	4.5	16.67	16	18	18
3. Cost	4	4.17	4.17	4.67	4.83	16.67	16.67	18.67	19.33
4. Background Knowledge	3	4.67	4.33	4.5	4.83	14	13	13.5	14.5
5. Simplicity	4	4.33	4.5	4.67	4.83	17.33	18	18.67	19.33
6. Performance	4	5	4.5	4	3.33	20	18	16	13.33
7. Quality	5	5	4.5	4.17	3.83	25	22.5	20.83	19.17
8. Materials	5	4.83	4.67	5	5	24.17	23.33	25	25
9. Size	1	3.83	4	4	4	3.83	4	4	4
10. Safety	3	5	4.83	5	5	15	14.5	15	15
11. Ergonomics	4	4.83	4.83	5	4.83	19.33	19.33	20	19.33
					Total	195.3	189.5	191.3	191.2

Table 12: The pressure sensor decision spreadsheet based on error and precision							
*All sensors are gauge pressure							
*Error BEFORE additional experimental errors		VENDOR					
		DATAQ		MCMASTER-CARR			Omega
	Pressure Sensor	Good Precision	Good Precision	Standard	High Precision	High Precision	Extreme Precision
SENSOR SPECS	Accuracy (%FSO)	0.5	0.5	1	0.25	0.25	0.08
	# Output Levels	200	200	100	400	400	1250
	Range (0-x)	**50**	**30**	**50**	**50**	**25**	**50**
	Overload (psi)	100	60	100	100	50	100
PRECISION (+/-)	Pressure (psi)	0.25	0.15	0.5	0.125	0.0625	0.04
	Force (N)	6.150	3.690	12.300	3.075	1.538	0.984
	Force (lb)	1.383	0.830	2.765	0.691	0.346	0.221
RELATIVE ERROR (+/-) ISOMETRIC CONDITION	Max reading (upper bound)	0.575%	x	1.150%	0.288%	x	0.092%
	Average reading	1.399%	x	2.799%	0.700%	x	0.224%
RELATIVE ERROR (+/-) LOAD/NO LOAD	Min reading (0 load, only water height pressure)	11.714%	7.028%	23.428%	5.857%	2.928%	1.874%
	40% isometric (upper bound)	1.339%	0.803%	2.678%	0.670%	0.335%	0.214%
	average 40% isometric	2.967%	1.780%	5.933%	1.483%	0.742%	0.475%
	COST	**$68.00**	**$68.00**	**$172.00**	**$387.00**	**$387.00**	**$880**

Appendix F: Sensing Arduino Code

```
//Author: Dan Feutz & Jagriti Jain
//Compiled for Arduino Nano Every ABX00033
#include <Wire.h> //I2C, uses pin A4 for SDA and A5 for SCL
#include <Adafruit_ADS1X15.h> //simpler interface library with ADC board, circuit uses ads1015, 1083 config
//https://learn.adafruit.com/adafruit-4-channel-adc-breakouts/arduino-code

#define BLACK 0
#define RED 1
#define BLUE 2
#define COLOR_ERROR 4

//blue diode is slim with gold hookups, red is wider
const int blueDiode = A3;
```

```
14. const int redDiode = A2;
15. const int pressureInput = A1; //failsafe -- if ADC gets fried ! LOW PRECISION !
16.
17. //define thresholds manually here, above the threshold -> color matches that of respective diode
18. const int blueThresh = 3;
19. const int redThresh = 25;
20.
21. //for smoothing noisy readings
22. const int smoothingWindow = 3;
23. int blueldrReadings[smoothingWindow];
24. int bluesmoothingIndex = 0;
25. int redldrReadings[smoothingWindow];
26. int redsmoothingIndex = 0;
27.
28. int blueReading = 0;
29. int redReading = 0;
30. int redb = 0;
31. int blueb = 0;
32.
33. //states
34. int prevColor = BLACK;
35. int currentColor = 0;
36. int currentAngle = 0;
37.
38. #include <Wire.h> //I2C, uses pin A4 for SDA and A5 for SCL
39. #include <Adafruit_ADS1X15.h> //simpler interface library with ADC board
40. //https://learn.adafruit.com/adafruit-4-channel-adc-breakouts/arduino-code
41.
42.
43. const int ADCaddr = 0x48; //ground pin connected to addr config
44. Adafruit_ADS1015 ads1015;    // Construct an ads1015
45.
46. const unsigned long sampleInterval = 10; // ms, for 100 Hz
47. unsigned long lastSampleTime = 0;
48.
49. int getSmoothedLDRb() {
50.   blueldrReadings[bluesmoothingIndex] = analogRead(blueDiode);
51.   bluesmoothingIndex = (bluesmoothingIndex + 1) % smoothingWindow;
52.   long sum = 0;
53.   for (int i = 0; i < smoothingWindow; i++) {
54.     sum += blueldrReadings[i];
55.   }
56.   return sum / smoothingWindow;
57. }
58.
59. int getSmoothedLDRr() {
60.    redldrReadings[redsmoothingIndex] = analogRead(redDiode);
61.    redsmoothingIndex = (redsmoothingIndex + 1) % smoothingWindow;
62.    long sum = 0;
63.    for (int i = 0; i < smoothingWindow; i++) {
64.      sum += redldrReadings[i];
65.    }
66.    return sum / smoothingWindow;
67.  }
68.
69. void setup() {
70.   //ads1015.begin();  // Initialize ads1015 at the default address 0x48
71.   //ads1015.setGain(GAIN_ONE);     // 1x gain   +/- 4.096V  1 bit = 2mV
72.   prevColor = readColor(); //find initial color
```

```
  Serial.begin(115200);
}

void loop() {
  unsigned long currentTime = millis();

  currentColor = readColor();
  //encoding logic
  // BLACK -> RED -> BLUE is increment
  if (prevColor == BLACK) {
    if (currentColor == BLUE) {
      currentAngle +=  -1;
    } else if (currentColor == RED) {
      currentAngle += 1;
    }
  } else if (prevColor == RED) {
    if (currentColor == BLACK) {
      currentAngle += -1;
    } else if (currentColor == BLUE) {
      currentAngle += 1;
    }
  } else if (prevColor == BLUE) {
    if (currentColor == RED) {
      currentAngle += -1;
    } else if (currentColor == BLACK) {
      currentAngle += 1;
   }
  }
  if (currentColor != COLOR_ERROR){
    prevColor = currentColor;
  } else {
    prevColor = prevColor;
  }

  if (currentTime - lastSampleTime >= sampleInterval) {
    lastSampleTime += sampleInterval;
    int16_t rawPressureVal; //actually 12 bit int, first 4 bits unused (-2048 to +2047)

    rawPressureVal =  analogRead(pressureInput);
    //rawPressureVal = ads1015.readADC_SingleEnded(0); //ENABLE FOR ACTUAL READINGS!

    Serial.print(currentTime); // Timestamp in ms
    Serial.print(',');
    Serial.print(rawPressureVal);
    Serial.print(',');
    Serial.println(currentAngle);
  }
}
```

```

```

```

int readColor() {

  blueReading = getSmoothedLDRb(); //for no filter: analogRead(blueDiode);
  redReading = getSmoothedLDRr(); //for no filter: analogRead(redDiode);
  int color = BLACK;

  blueb = 0;
  redb = 0;
```

```
131.
132.   if (blueReading > blueThresh) { blueb = 1;}
133.   if (redReading > redThresh) { redb = 1;}
134.
135.   int colorCode = (redb << 1) | blueb;
136.   switch ( colorCode ) {
137.     case 0b00:
138.       color = BLACK;
139.       break;
140.     case 0b01:
141.       color = BLUE;
142.       break;
143.     case 0b10:
144.       color = RED;
145.       break;
146.     default:
147.       color = COLOR_ERROR;
148.       break;
149.   }
150.   return color;
151}
```

Appendix G: Sensing MATLAB Code

```
 % full plotter

arduino = serialport("COM3", 115200, "Timeout", 4);
pause(2);
flush(arduino);

gainRange = 5; %4.096;
resistor = 200; % ohm
minReading = (0.004 * resistor) / gainRange * 1023; %2047;
maxReading = (0.020 * resistor) / gainRange * 1023; %2047;
plungerArea  = 5.53146598; % in^2

% Set up force figure
figure(1);
subplot(2,1,1);
title('Live Force Plotter');
xlabel('Time (s)');
ylabel('Force (N)');
grid on;
ax1 = gca;
ax1.YLim = [-5 500];
hForce = animatedline;

% Set up angle figure
subplot(2,1,2);
title('Live Angle Plotter');
xlabel('Time (s)');
ylabel('Angle (°)');
grid on;
ax2 = gca;
ax2.YLim = [-50 50];
hAngle = animatedline('Color','r');

%fid = fopen('data/newvals.csv', 'w');
%fprintf(fid, 'Timestamp (s), Raw value, Angle\n');

while true
    try
```

```
        raw = readline(arduino);
        disp("Raw: " + raw);
        data = str2double(strsplit(raw, ','));
        if numel(data) == 3
            timestamp = data(1) / 1000;
            rawVal = data(2);
            angle = data(3);

           % fprintf(fid, '%.3f,%.2f,%d\n', timestamp, rawVal, angle);

            pressureVal = (rawVal - minReading) * (50.0 / (maxReading - minReading));
            forceVal = pressureVal * plungerArea * 4.4482216153;

            addpoints(hForce, timestamp, forceVal);
            addpoints(hAngle, timestamp, angle);

            [xF, yF] = getpoints(hForce);
            [xA, yA] = getpoints(hAngle);
            recentIdxF = xF > (timestamp - 10);
            recentIdxA = xA > (timestamp - 10);

            clearpoints(hForce);
            clearpoints(hAngle);
            addpoints(hForce, xF(recentIdxF), yF(recentIdxF));
            addpoints(hAngle, xA(recentIdxA), yA(recentIdxA));

            drawnow limitrate;
        end
    catch ME
        disp("Error reading data: " + ME.message);
        break;
    end
end

%fclose(fid);
clear arduino;

```