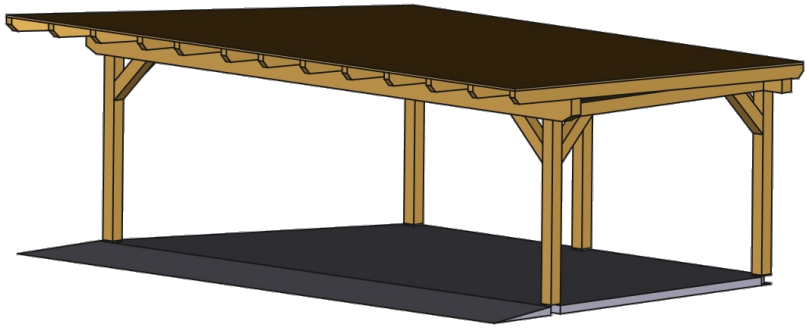

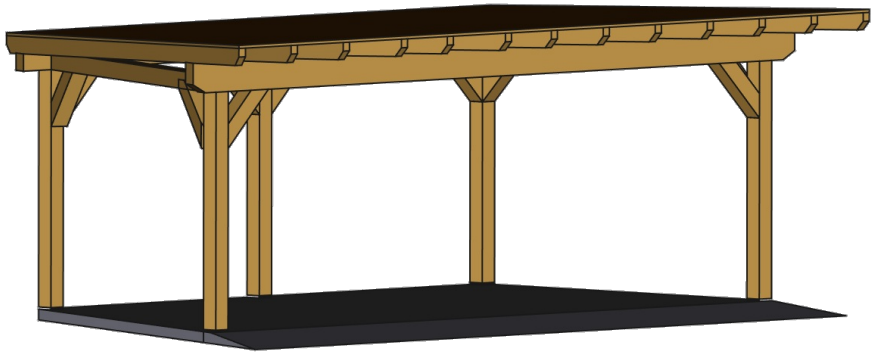

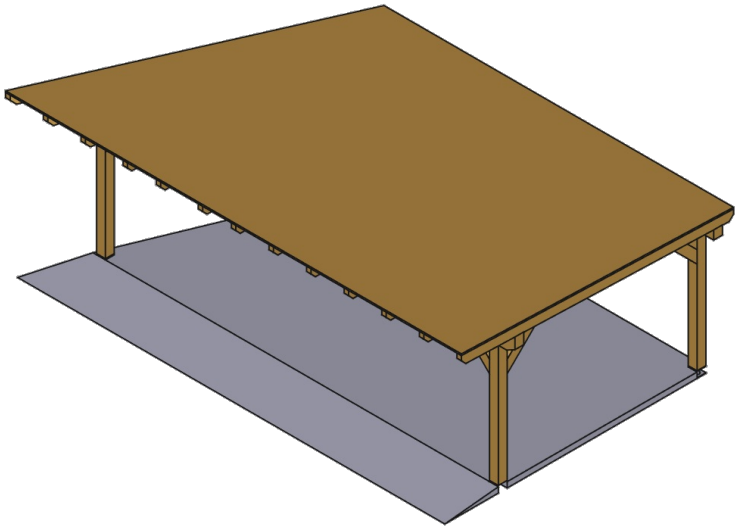

DESIGNED BY: J. Vetter DATE: 14.02.26		Carport 3D View Subtitle	
SIZE A4			
SCALE	WEIGHT (kg)	DRAWING NUMBER 2	SHEET 2 / 4

This drawing is our property; it can't be reproduced or communicated without our written consent.

G	_
F	_
E	_
D	_
C	_
B	_
A	_