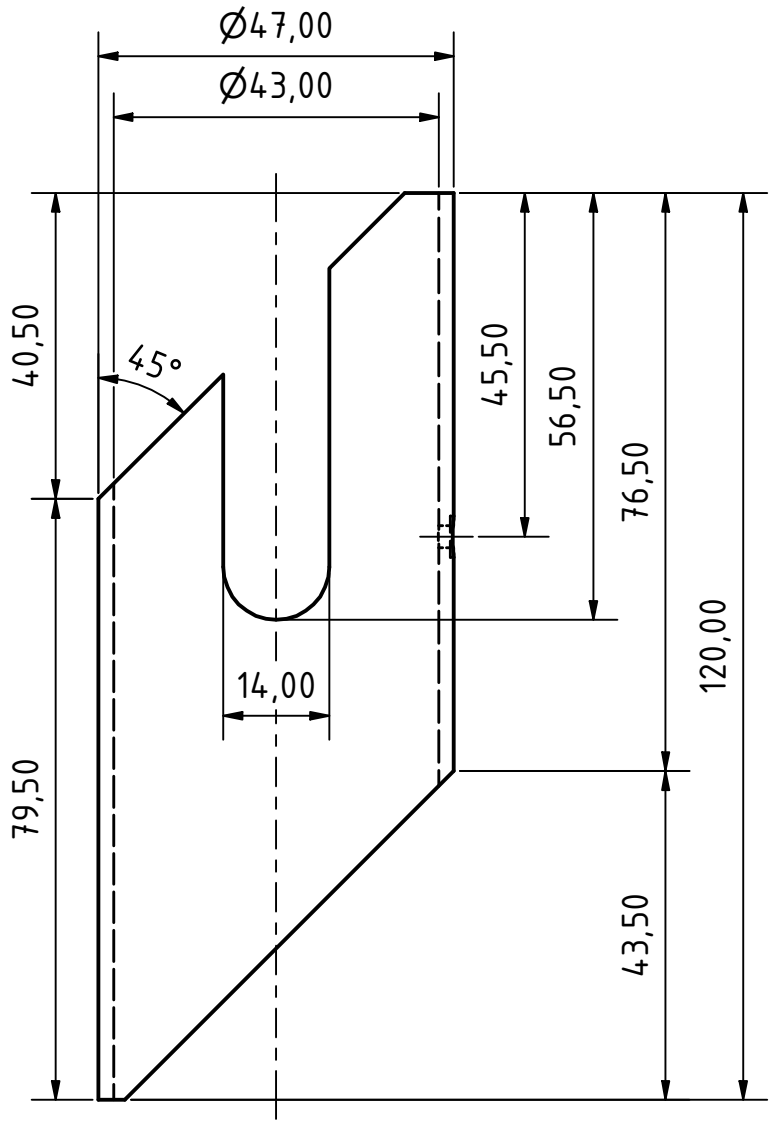

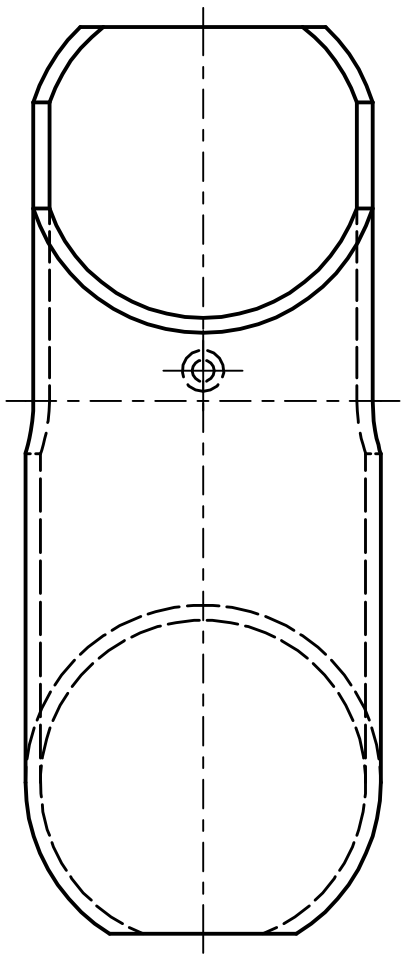

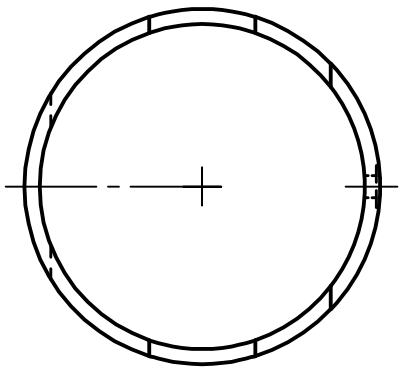

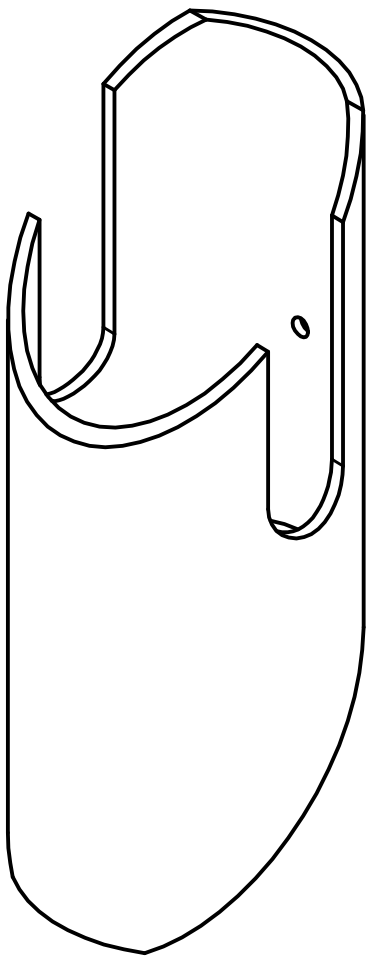

					Date	Name
				Drawn	12.05.2024	jo__ki
				Checked		
				Standard		
State	Changes	Date	Name			

Test_Blade_Guard

1

A3