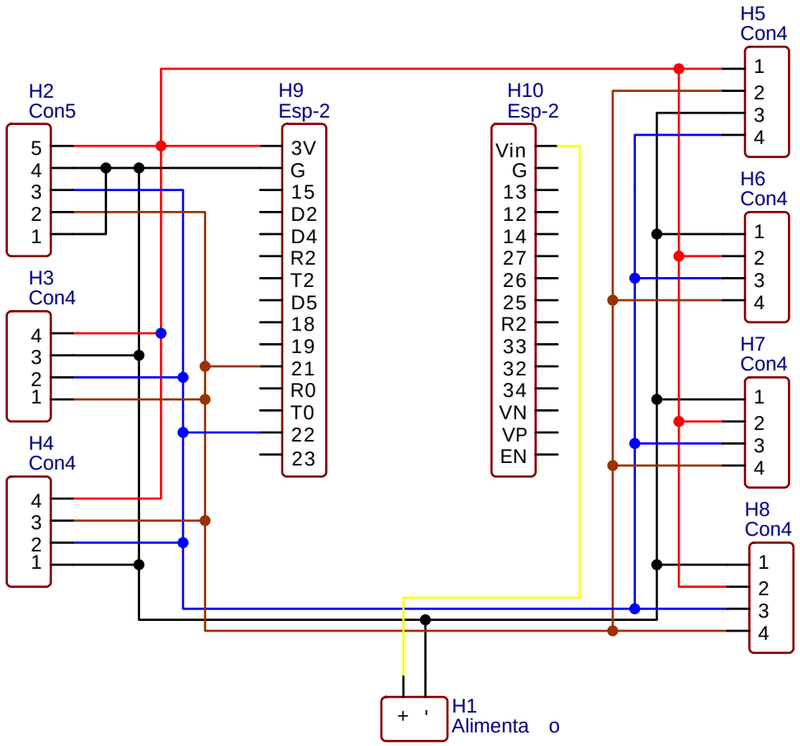

TITLE: Placa controlado ESP (PEsp)

REV: 1

Fatec Jundiaí Deputado Ary Fossen

Company: Fatec Jundia í

Sheet: 1/5

Date: 2023-05-11 Drawn By: Allan