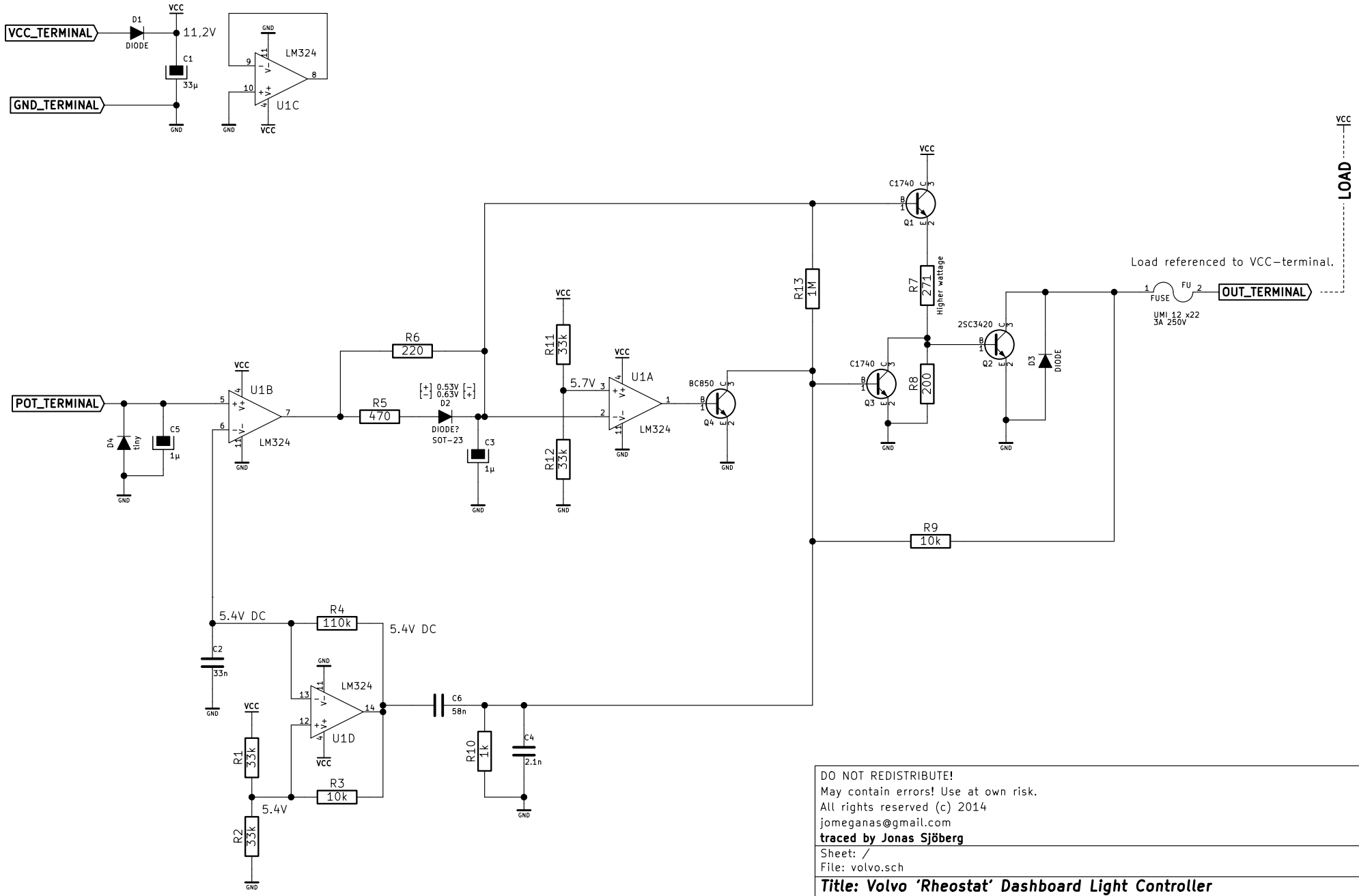

DO NOT REDISTRIBUTE!
May contain errors! Use at own risk.
All rights reserved (c) 2014
jomeganas@gmail.com
traced by Jonas Sjöberg

Sheet: /
File: volvo.sch

Title: Volvo 'Rheostat' Dashboard Light Controller

Size: A4	Date: tis 28 okt 2014	**Rev: 2**
KiCad E.D.A. kicad (2014-jul-16 BZR unknown)-product		Id: 1/1