https://docs.espressif.com/projects/esp-hardware-design-guidelines/en/latest/esp32c2/pcb-layout-design.html
https://docs.espressif.com/projects/esp-hardware-design-guidelines/en/latest/esp32/_images/esp32-pcb-layout-example.png
https://documentation.espressif.com/esp32-c3_datasheet_en.pdf
https://docs.espressif.com/projects/esp-hardware-design-guidelines/en/latest/esp32c3/schematic-checklist.html
https://documentation.espressif.com/esp32-c3-mini-1_datasheet_en.pdf

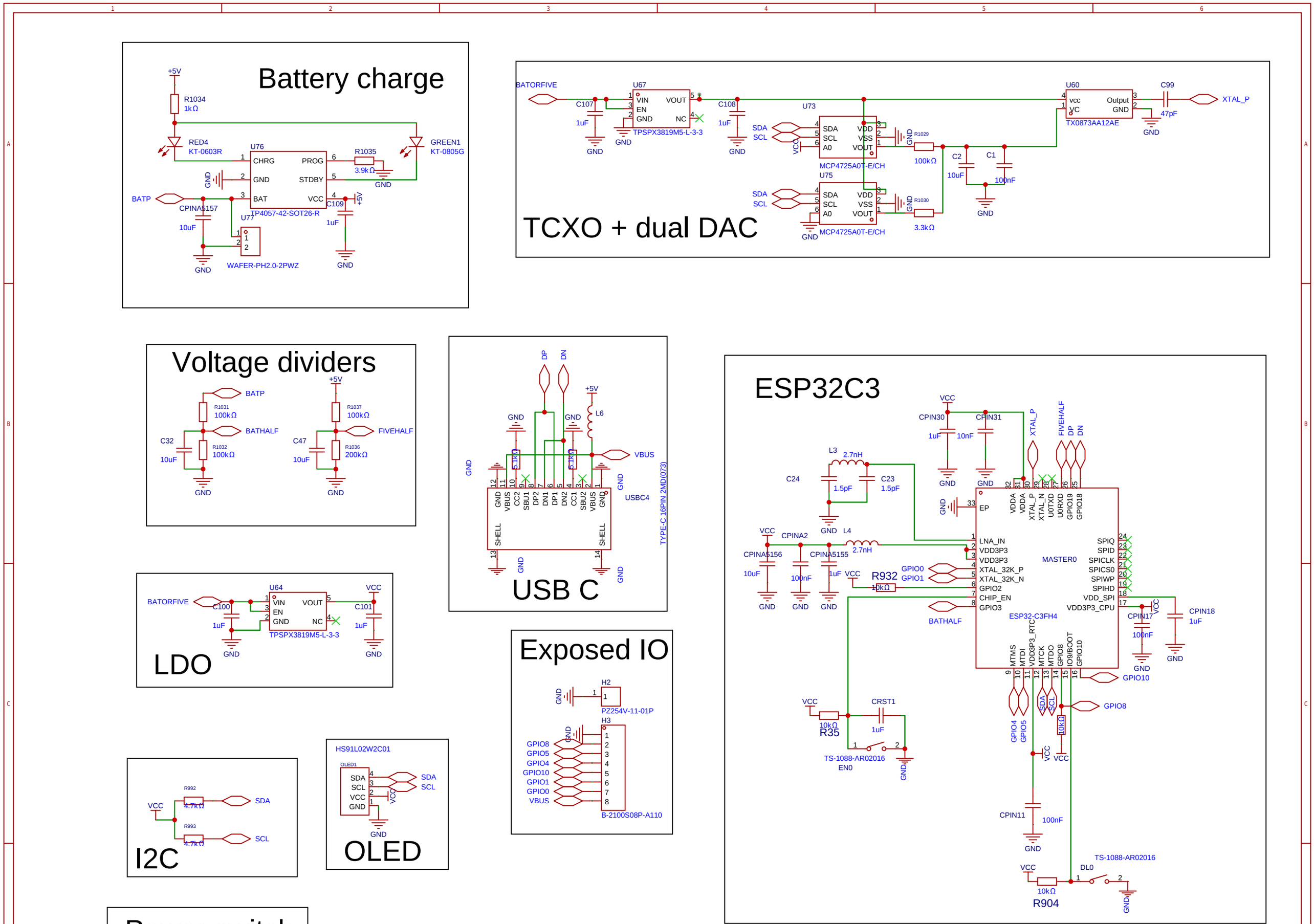

Schematic	Schematic1	Create at	2025-12-07
		Update at	2026-02-19
Board	Board1	Page	P1
Drawn	esp32_c3_ppm_11_11_2025		
Reviewed			
		Version	Size	Page 1 Total 1
EasyEDA	V1.0	A4	EasyEDA.com