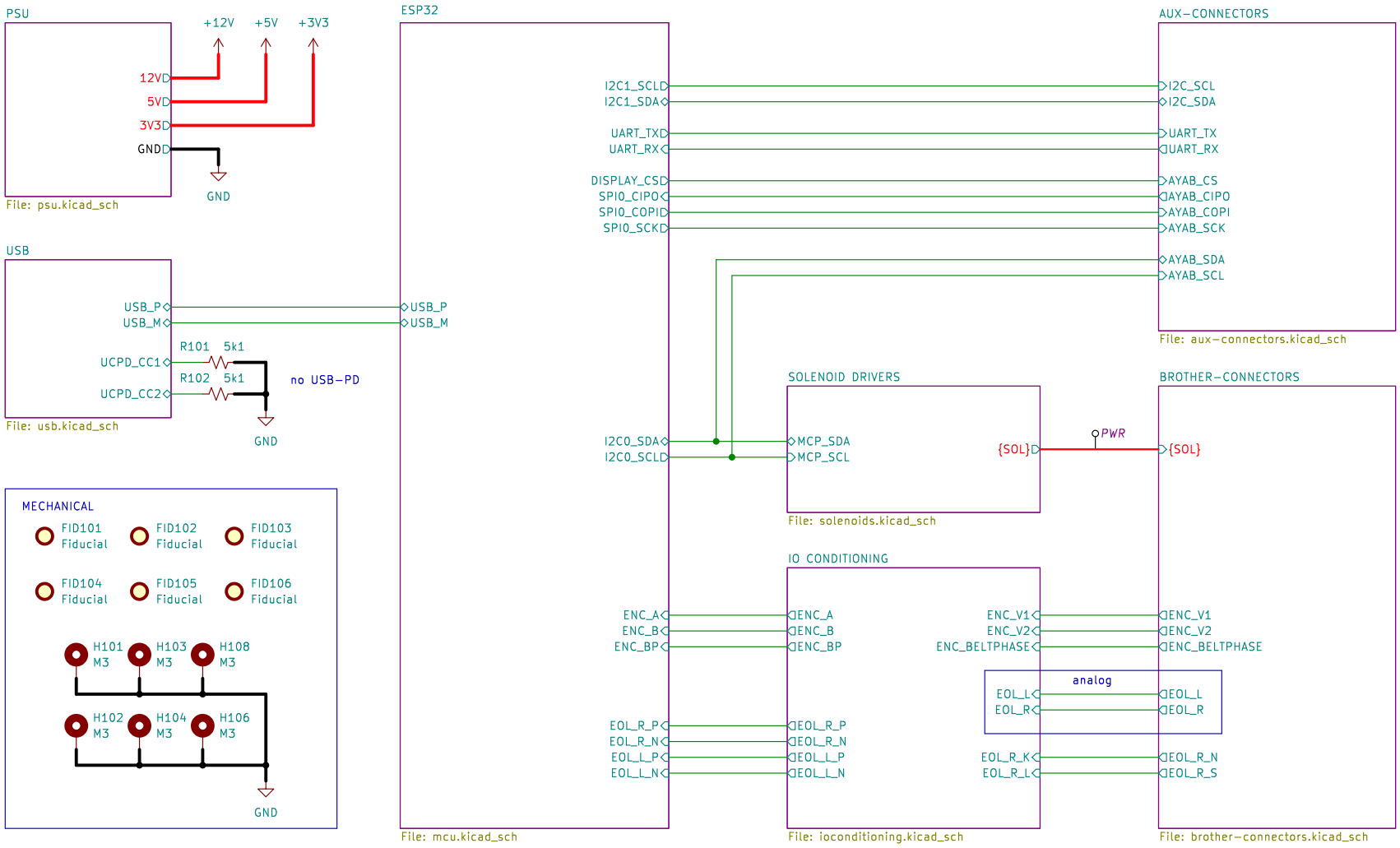

distributed under CC-BY-SA-4.0
ayab-knitting.com
matei

all yarns are beautiful

Sheet: /
File: ayab-esp32.kicad_sch

Title: AYAB-ESP32 overview

Size: A4	Date: 2023-07-17	**Rev: 0.1**
KiCad E.D.A. 9.0.2		Id: 1/8

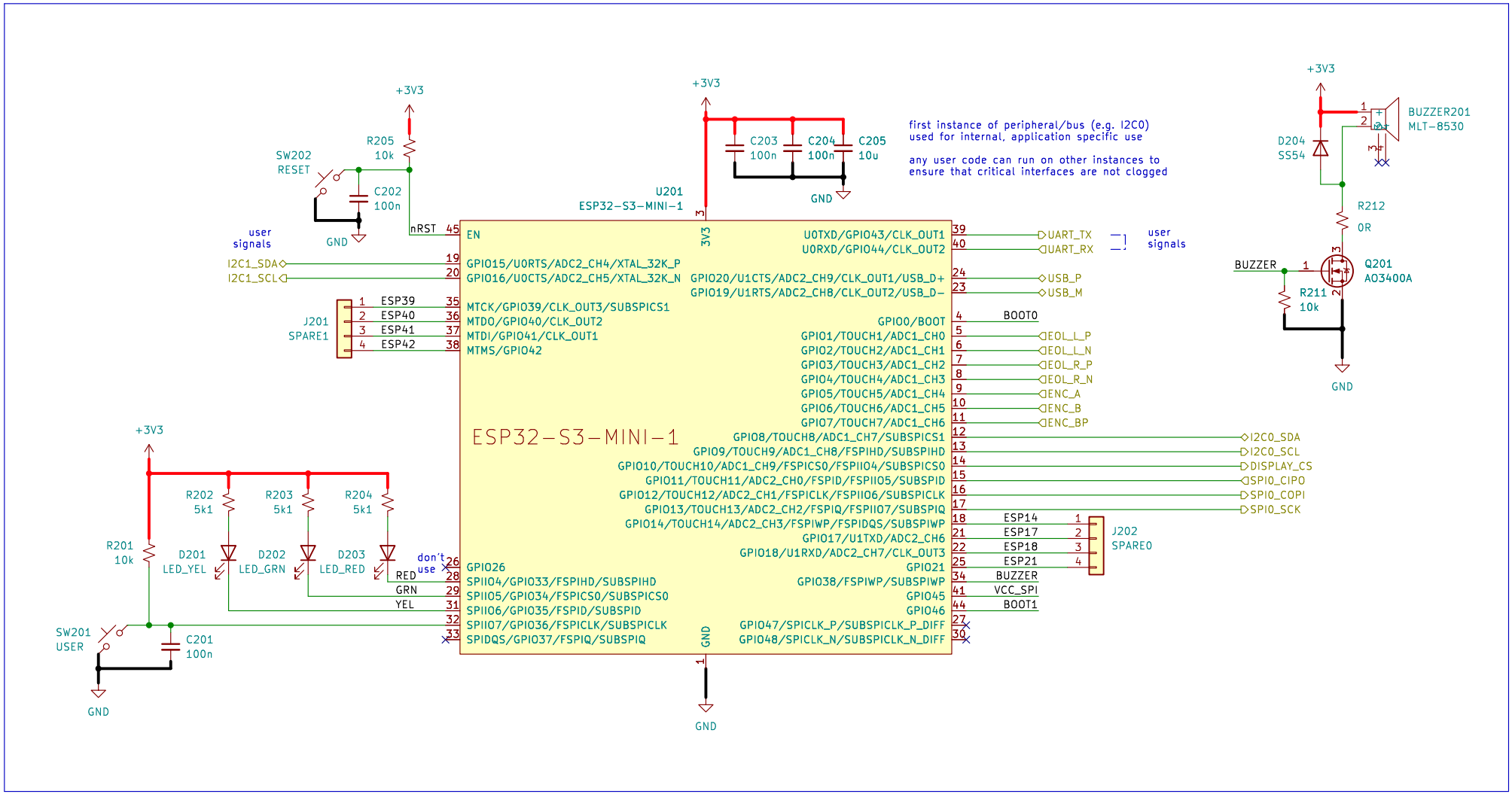

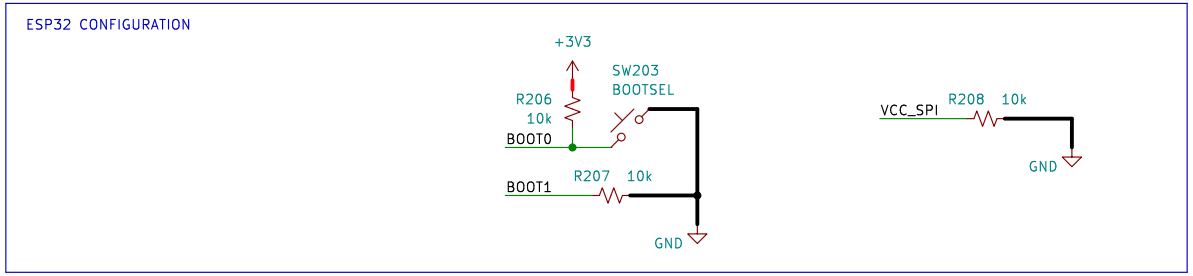

distributed under CC-BY-SA-4.0
ayab-knitting.com
matei

Sheet: /ESP32/
File: mcu.kicad_sch

Title: ESP32

Size: A4	Date: 2023-07-17	**Rev: 0.1**
KiCad E.D.A. 9.0.2		Id: 2/8

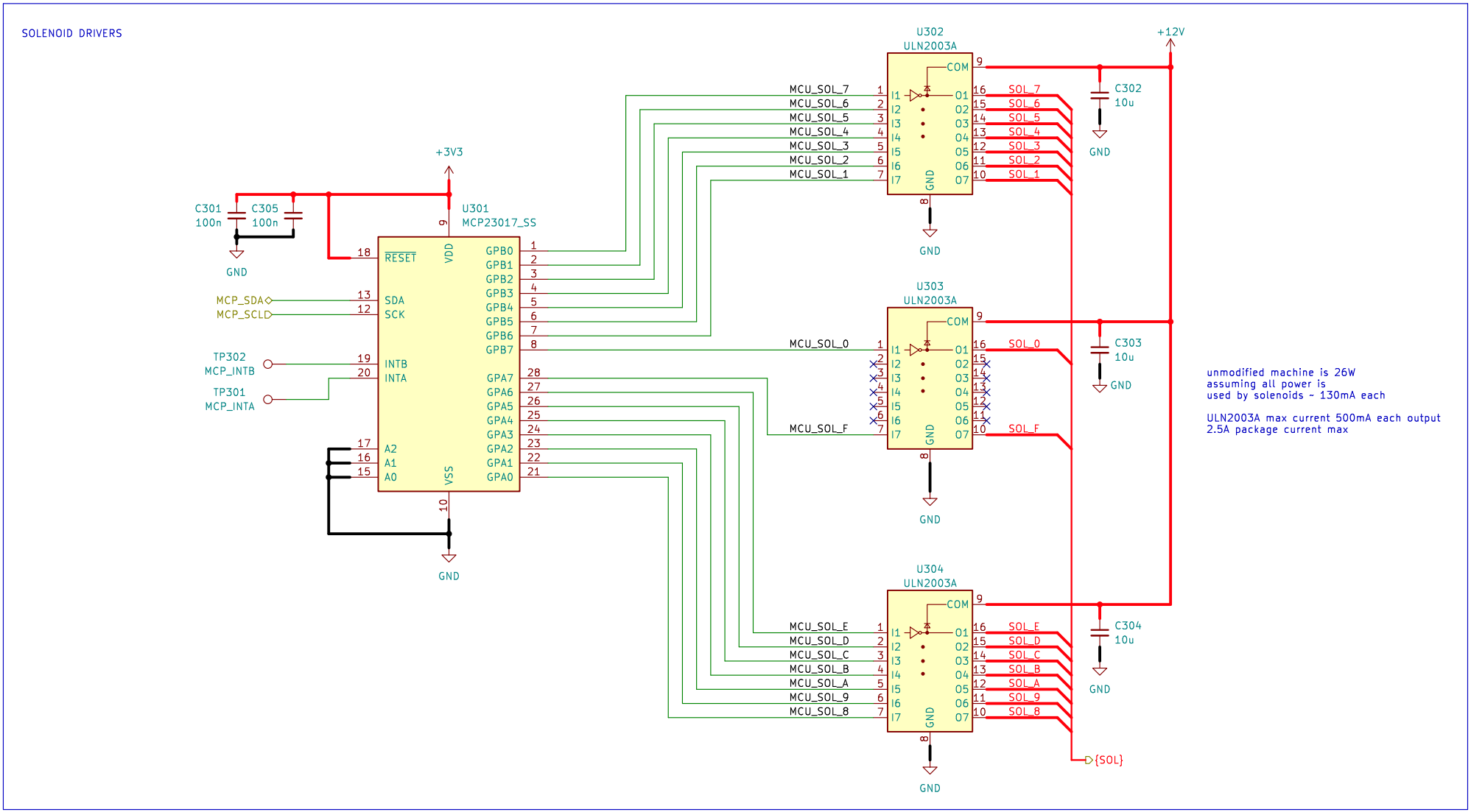

distributed under CC-BY-SA-4.0
ayab-knitting.com
matei

Sheet: /SOLENOID DRIVERS/
File: solenoids.kicad_sch

Title: SOLENOID DRIVERS

Size: A4	Date: 2023-07-17	**Rev: 0.1**
KiCad E.D.A. 9.0.2		Id: 3/8

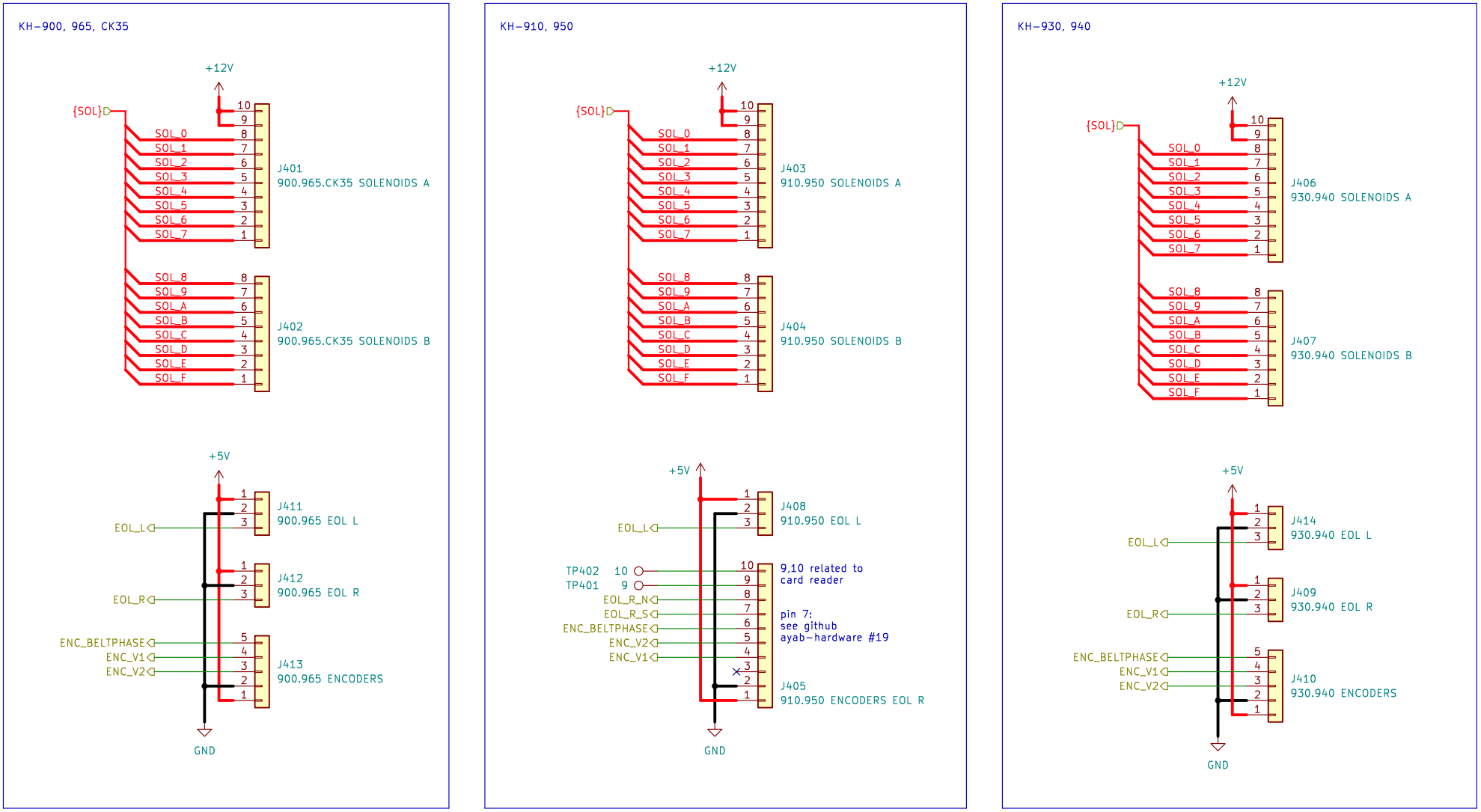

distributed under CC-BY-SA-4.0
ayab-knitting.com
matei

Sheet: /BROTHER-CONNECTORS/
File: brother-connectors.kicad_sch

Title: CONNECTORS

Size: A4	Date: 2023-07-17	**Rev: 0.1**
KiCad E.D.A. 9.0.2		Id: 4/8

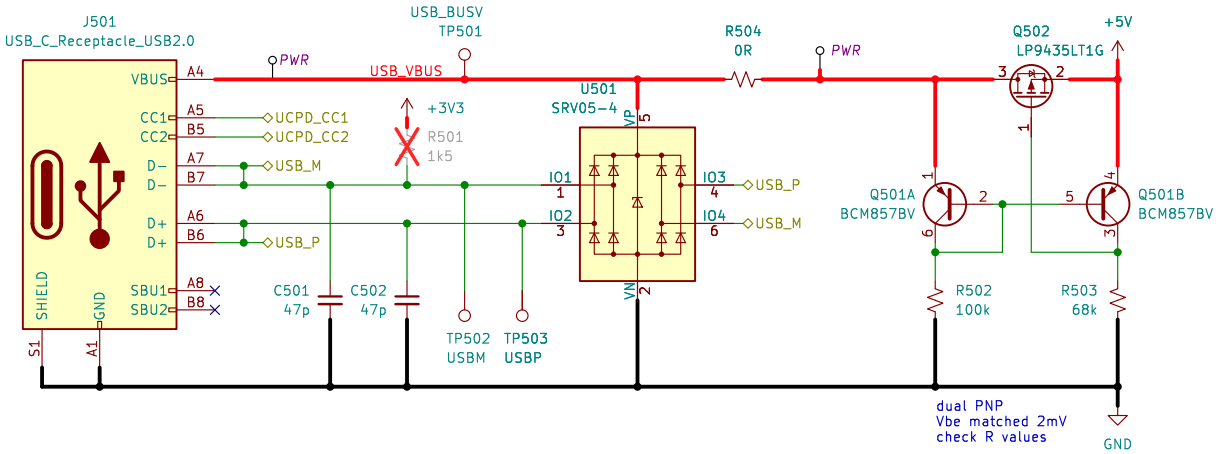

distributed under CC−BY−SA−4.0
ayab−knitting.com
matei

Sheet: /USB/
File: usb.kicad_sch

Title: USB & ESD

Size: A4	Date: 2023−07−17	**Rev: 0.1**
KiCad E.D.A. 9.0.2		Id: 5/8

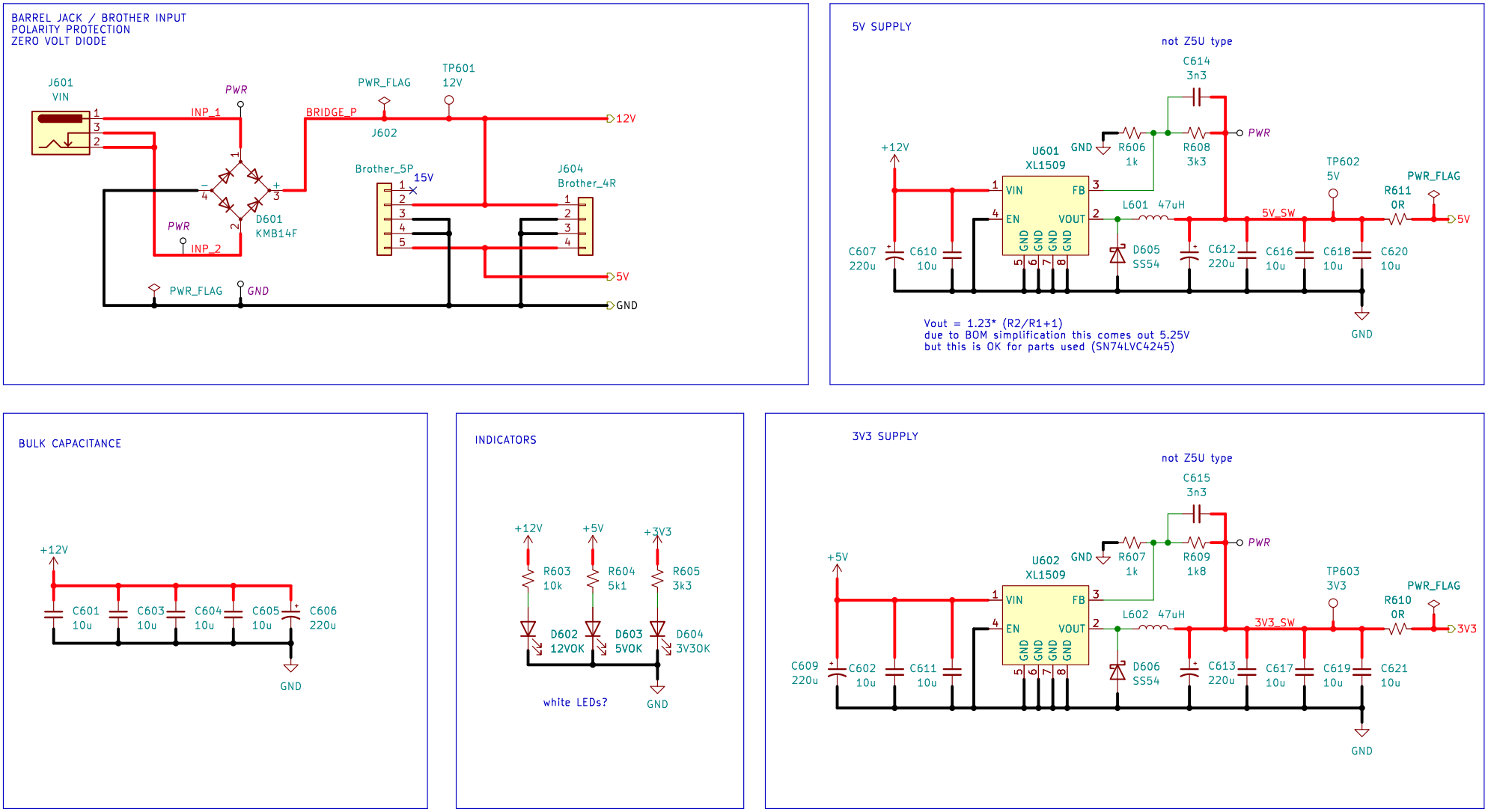

distributed under CC-BY-SA-4.0
ayab-knitting.com
matei

Sheet: /PSU/
File: psu.kicad_sch

Title: POWER SUPPLY

Size: A4	Date: 2023-07-17	**Rev: 0.1**
KiCad E.D.A. 9.0.2		Id: 6/8

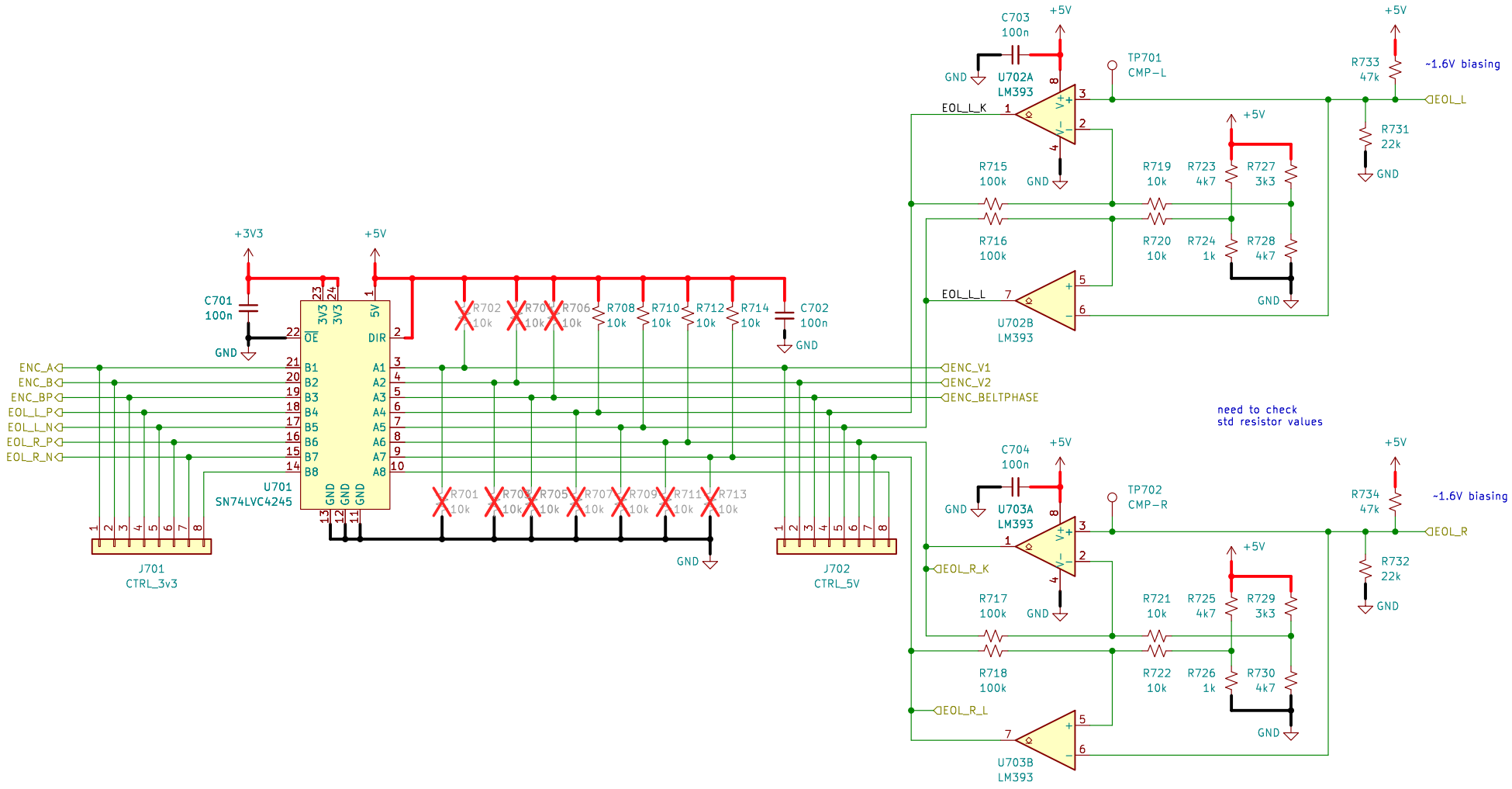

distributed under CC-BY-SA-4.0
ayab-knitting.com
matei

Sheet: /IO CONDITIONING/
File: ioconditioning.kicad_sch

Title: I/O CONDITIONING

Size: A4	Date: 2023-07-27	**Rev: 0.1**
KiCad E.D.A. 9.0.2		Id: 7/8

AUX EXPANSION

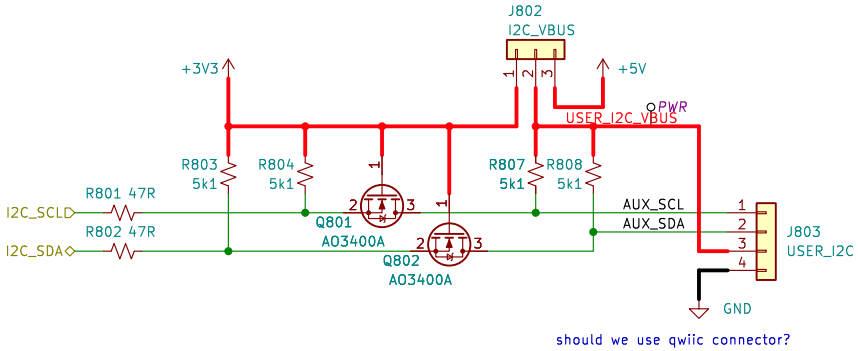

should we use qwiic connector?

MCP-extenal control

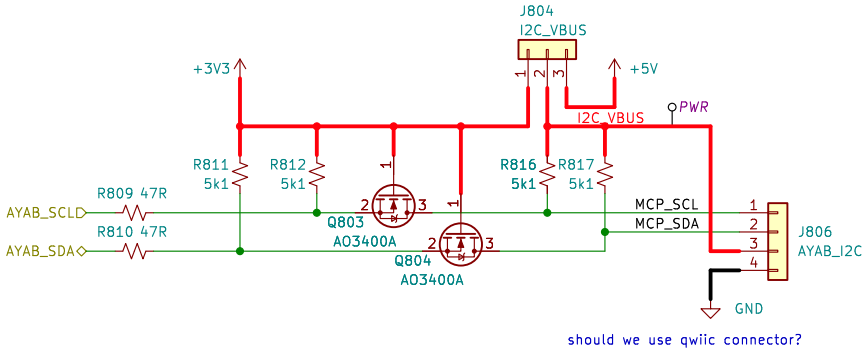

should we use qwiic connector?

AYAB UART debug port

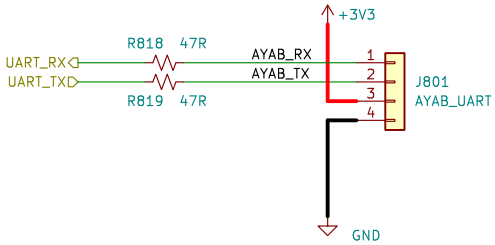

Future display

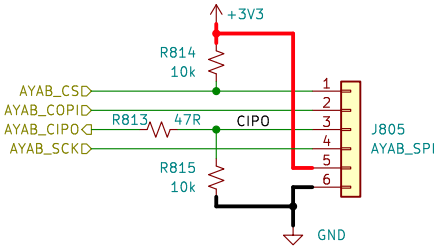

Sheet: /AUX-CONNECTORS/
File: aux-connectors.kicad_sch

Title:

Size: A4	Date:	**Rev:**
KiCad E.D.A. 9.0.2		Id: 8/8