mc8051 IP Core Introduction

Roland Höller
Email: hoeller@technikum-wien.at

mc8051 Overview

- 8-bit microcontroller
- Originally from Intel, now lots of derivatives
- Open-source IP core (Oregano Systems)
  - available at http://www.oregano.at
- 128 Byte RAM
- Up to 64 kByte ROM
- Up to 64 kByte XRAM
- Integrated peripherals (UART, timer, …)

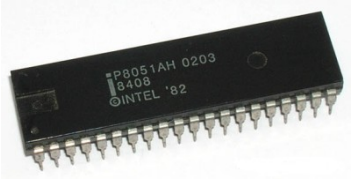

What is an IP Core?

- **I**ntellectual **P**roperty
- Encapsulates specific functionality
- Part of design reuse methodology
  - for details, see MES “SoC Design” lecture
- May be free, open-source or commercial
- Oregano mc8051 IP core is open-source (LGPL)
- Provided in the form of VHDL code

Top-level Entity (fpga_top)

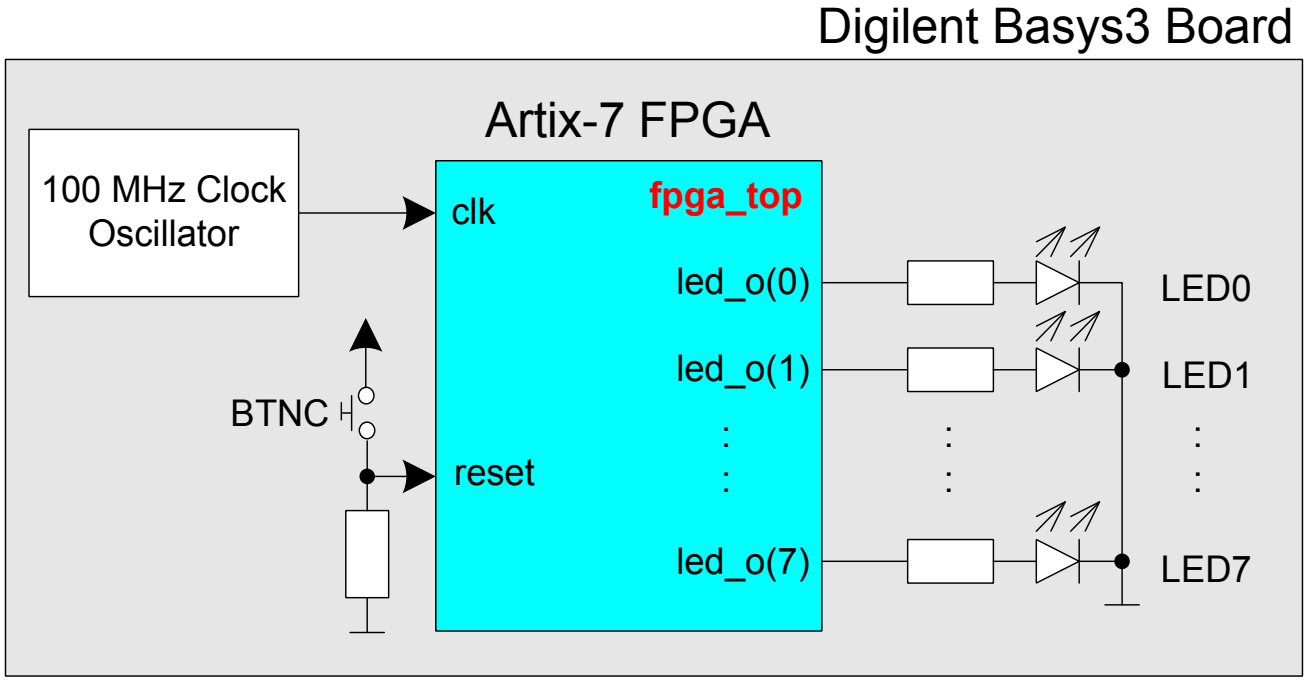

Top-level Architecture (rtl of fpga_top)

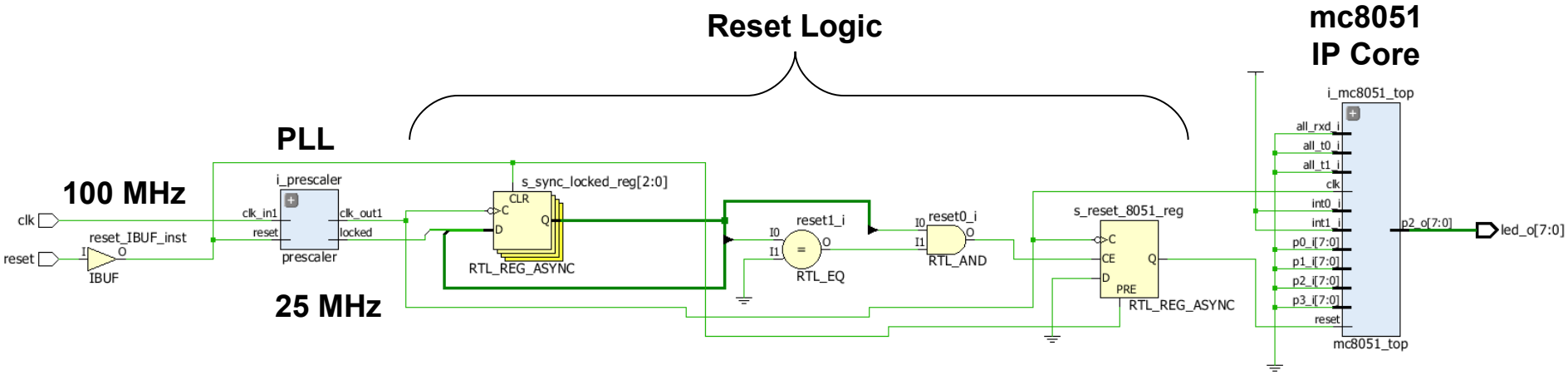

mc8051 Top-level Architecture (struc of mc8051_top)

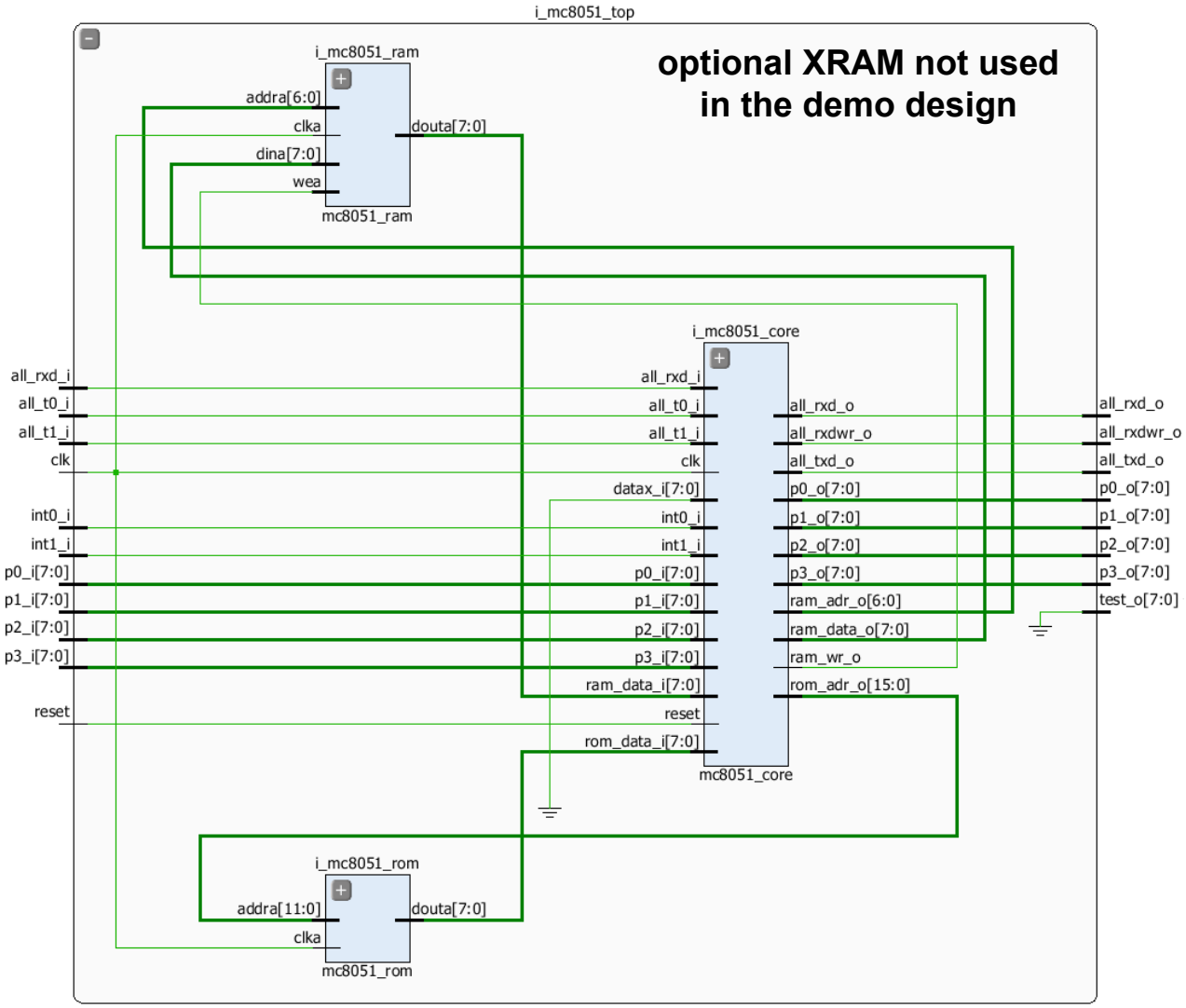

HW/SW Tool Flow

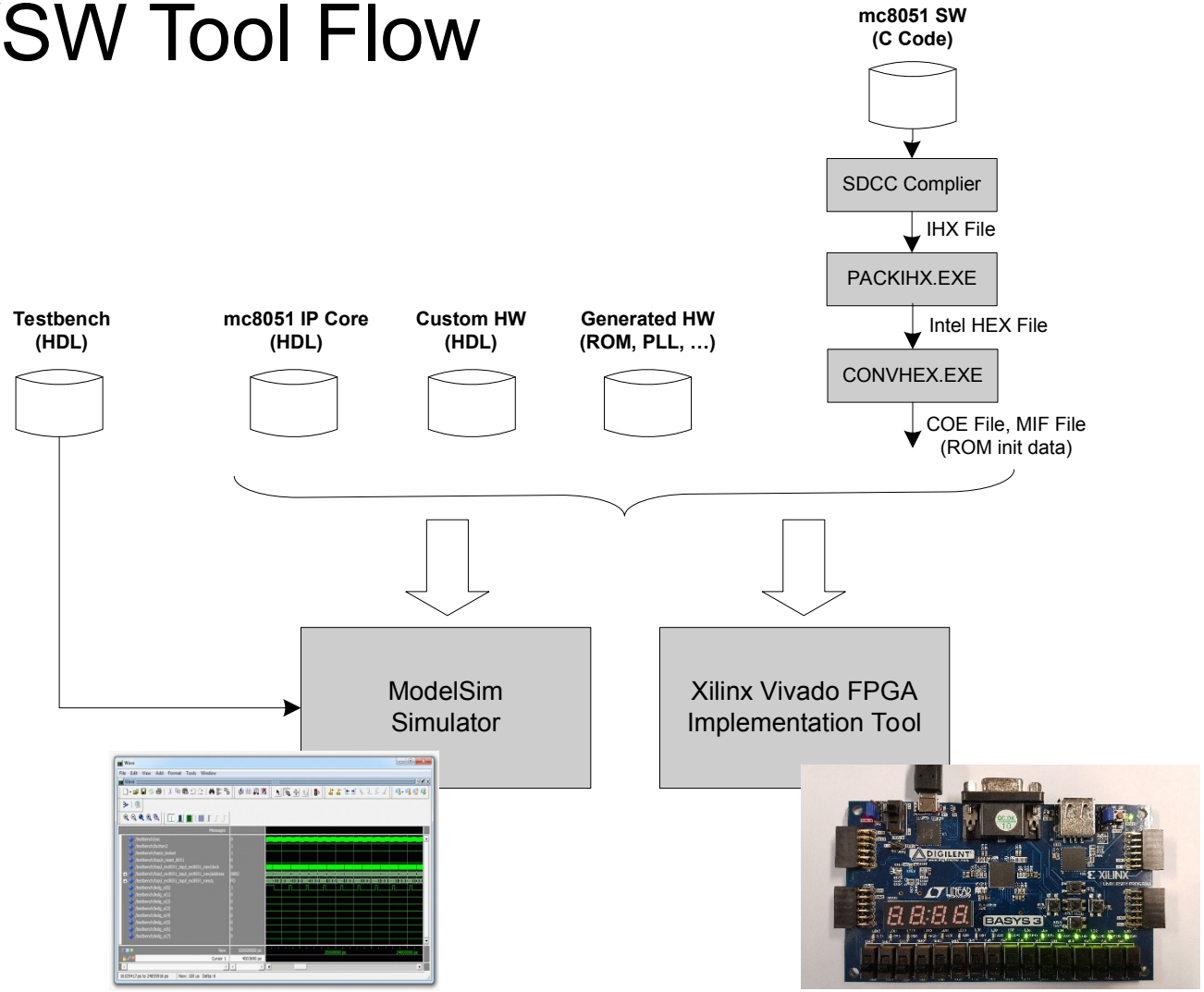

Directory Structure

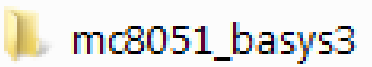

- **doc** … documents (user guides, data sheets, …)
- **hw**
  - **generate** … generated blocks (RAM, ROM, PLL, …)
  - **hdl** … HLD code of FPGA design (VHDL)
    - **mc8051** … mc8051 IP Core
  - **impl** … Xilinx Vivado project directory
  - **sim** … ModelSim working directory (includes do-scripts)
  - **tb** … testbenches
- **sw**
  - **blink_led** … blink LED application
    - **build** … SDCC compiler working directory
    - **src** … C source of the blink LED application
- **tools** … miscellaneous tools (CONVHEX, PACKIHX)

Hands-on Exercises

- Simulate and implement the mc8051 IP core demo design
  - see lecture notes “mc8051 Getting Started”
- **Task #1:** Modify the hardware
  - LEDs 1-7 shall blink like LED0
  - Simulate the modified design ⇒ compile.do
  - Implement and run the modified design on the Basys3 board
- **Task #2:** Modify the software
  - Implement a running LED software application using LEDs 0-7
  - Simulate the modified design ⇒ build_mc8051_sw.do
  - Implement and run the modified design on the Basys3 board
  - Note! You have to close Xilinx Vivado before you run the “build_mc8051_sw.do” script and reopen the project afterwards!