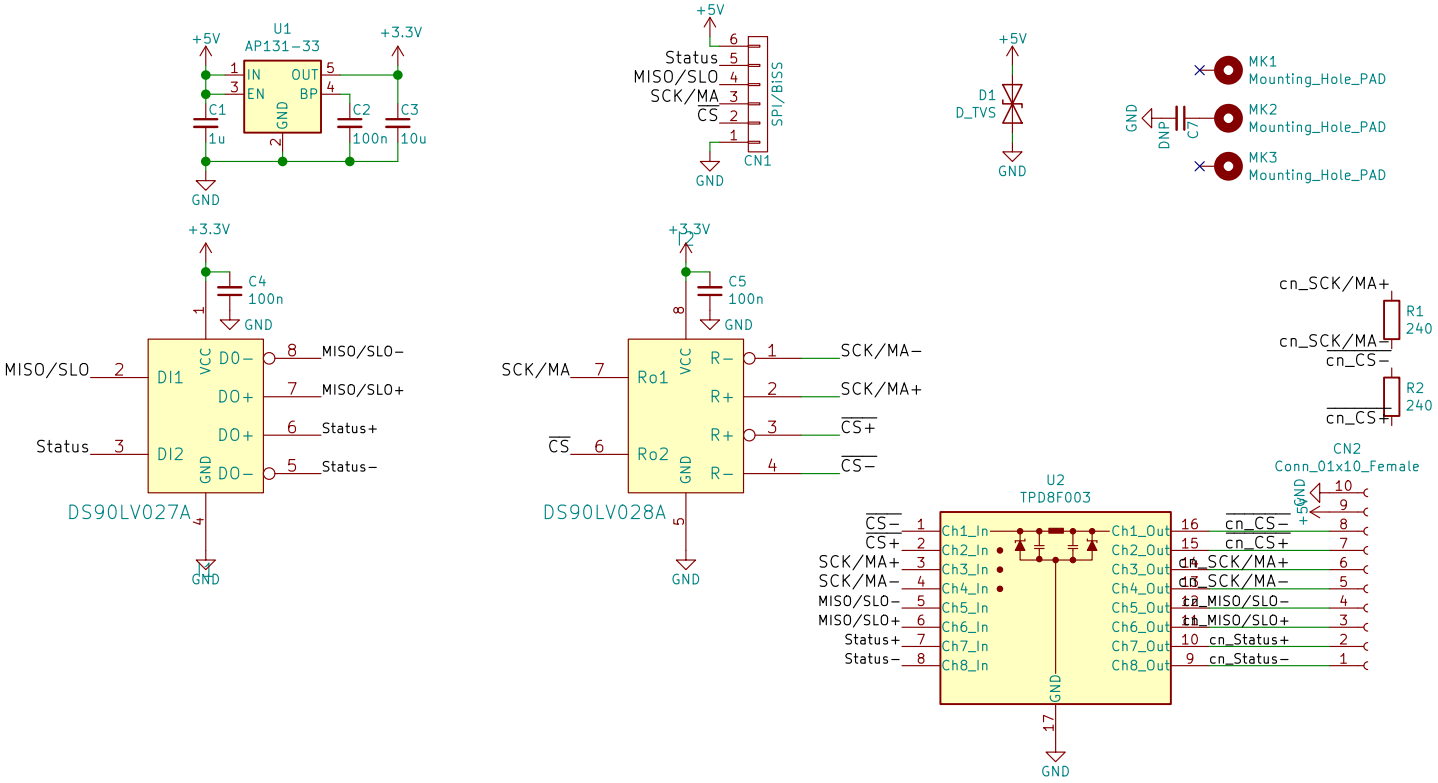
U1
AP131-33
+5V
+3.3V
IN
EN
OUT
BP
GND
C1
1u
C2
100n
C3
10u
GND
+5V
Status
MISO/SLO
SCK/MA
CS
SPI/BiSS
CN1
GND
+5V
D1
D_TVS
GND
GND
DNP
C7
MK1
Mounting_Hole_PAD
MK2
Mounting_Hole_PAD
MK3
Mounting_Hole_PAD
+3.3V
C4
100n
GND
MISO/SLO
DI1
VCC
DO−
DO+
DO+
DO−
MISO/SLO−
MISO/SLO+
Status+
Status−
Status
DI2
GND
DS90LV027A
GND
+3.3V
C5
100n
GND
SCK/MA
Ro1
VCC
R−
R+
R+
R−
SCK/MA−
SCK/MA+
CS+
CS−
CS
Ro2
GND
DS90LV028A
GND
cn_SCK/MA+
R1
240
cn_SCK/MA−
cn_CS−
R2
240
cn_CS+
CN2
Conn_01x10_Female
+5V
GND
U2
TPD8F003
CS−
CS+
SCK/MA+
SCK/MA−
MISO/SLO−
MISO/SLO+
Status+
Status−
Ch1_In
Ch2_In
Ch3_In
Ch4_In
Ch5_In
Ch6_In
Ch7_In
Ch8_In
Ch1_Out
Ch2_Out
Ch3_Out
Ch4_Out
Ch5_Out
Ch6_Out
Ch7_Out
Ch8_Out
cn_CS−
cn_CS+
cn_SCK/MA+
cn_SCK/MA−
cn_MISO/SLO−
cn_MISO/SLO+
cn_Status+
cn_Status−
GND
GND