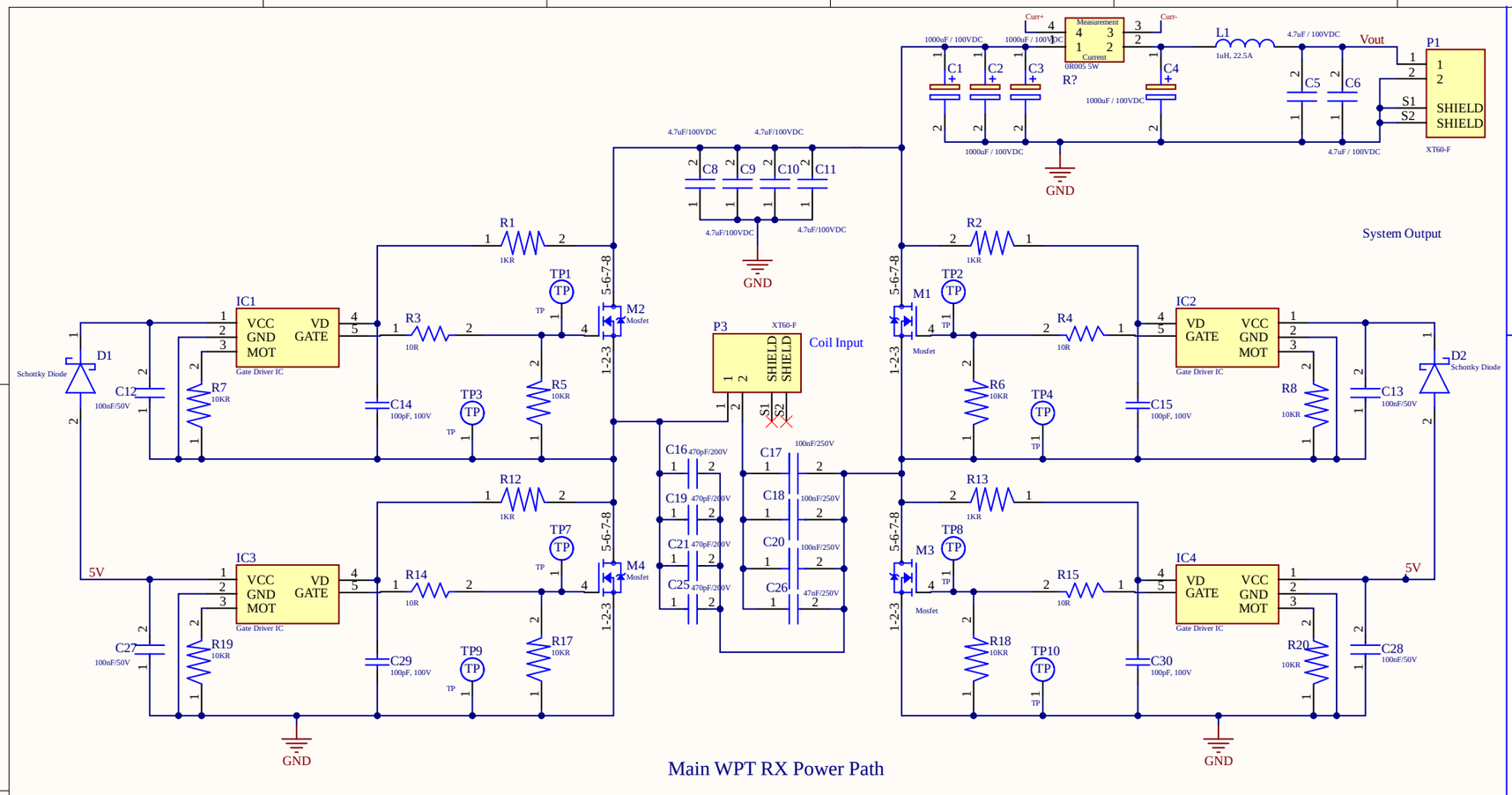

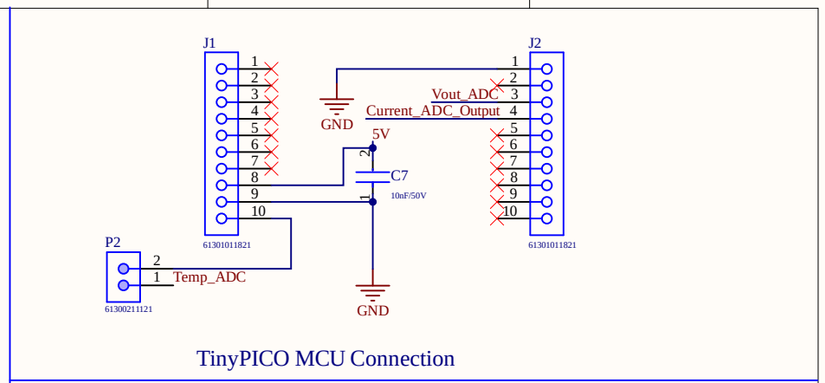

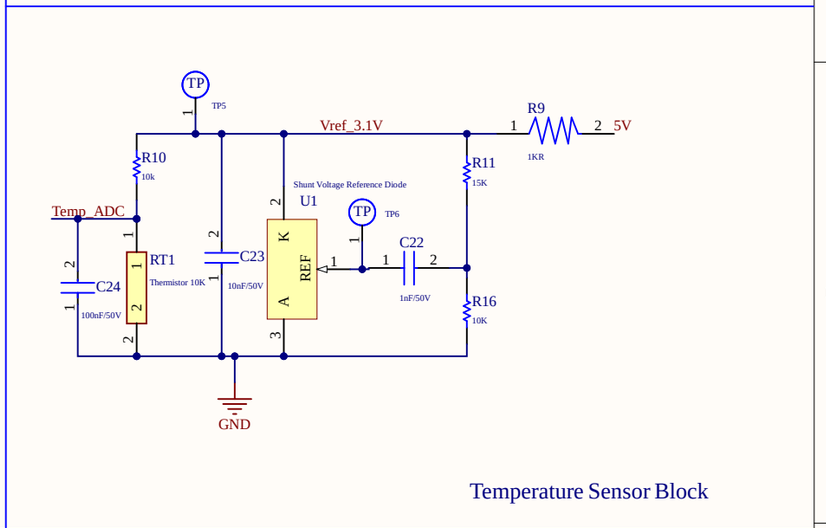

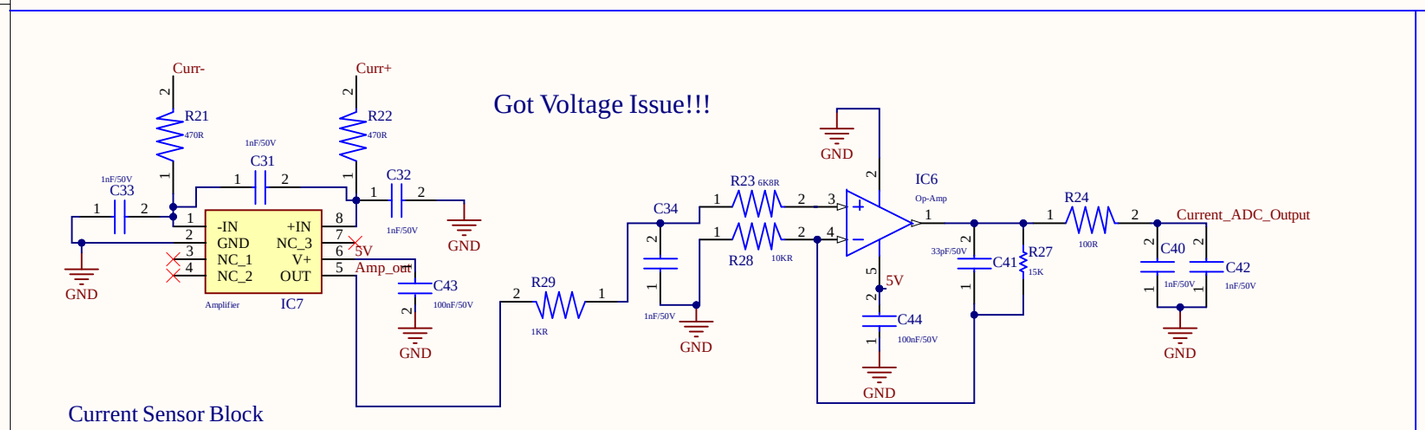

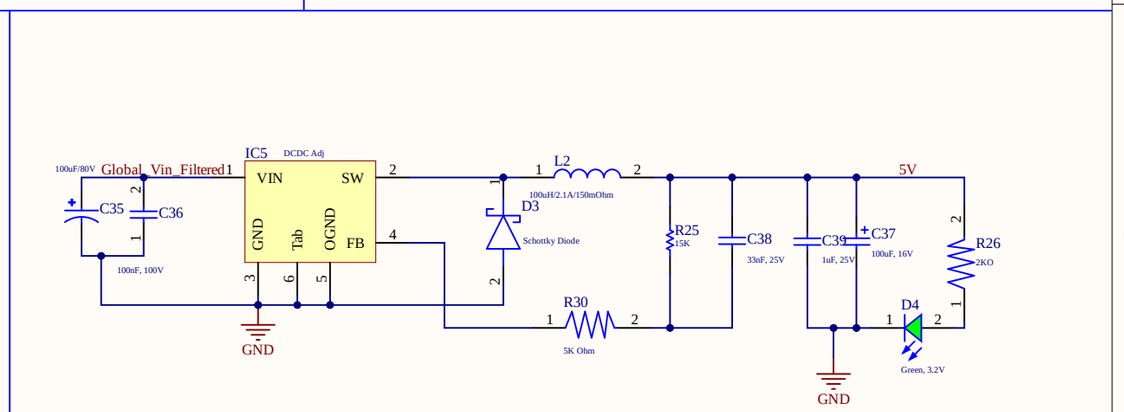

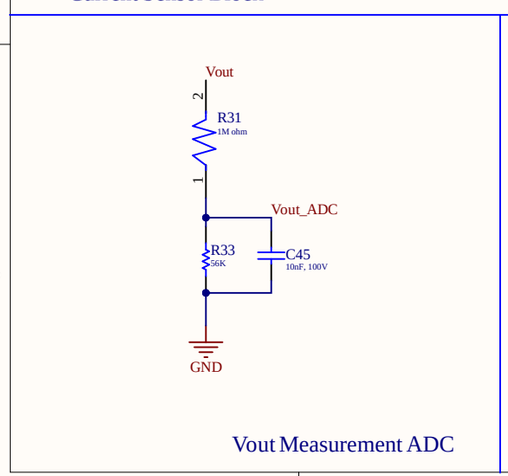

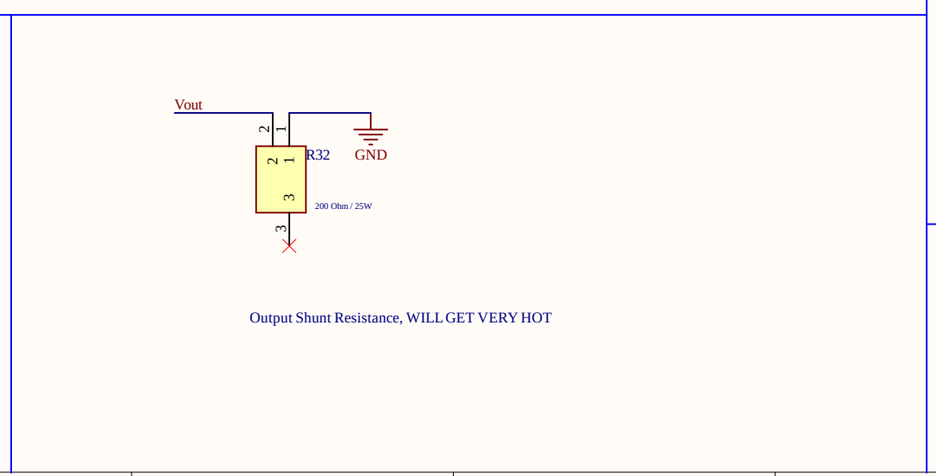

M5 M6 M7 M8 — M3 Mounting Hole

Mounting Hole M3

NUS		OPEN SOURCE. FREE to DISTRIBUTE.	
Project: WPT Round 3 RX		Variant: [No Variations]	
Page Contents: RX Schematics.SchDoc			Checked By: Lingke
Size: -	DWG No: *		Revision 1.0
Date: 19/12/2021	Drawn By: Lingke	Sheet 1	of 1