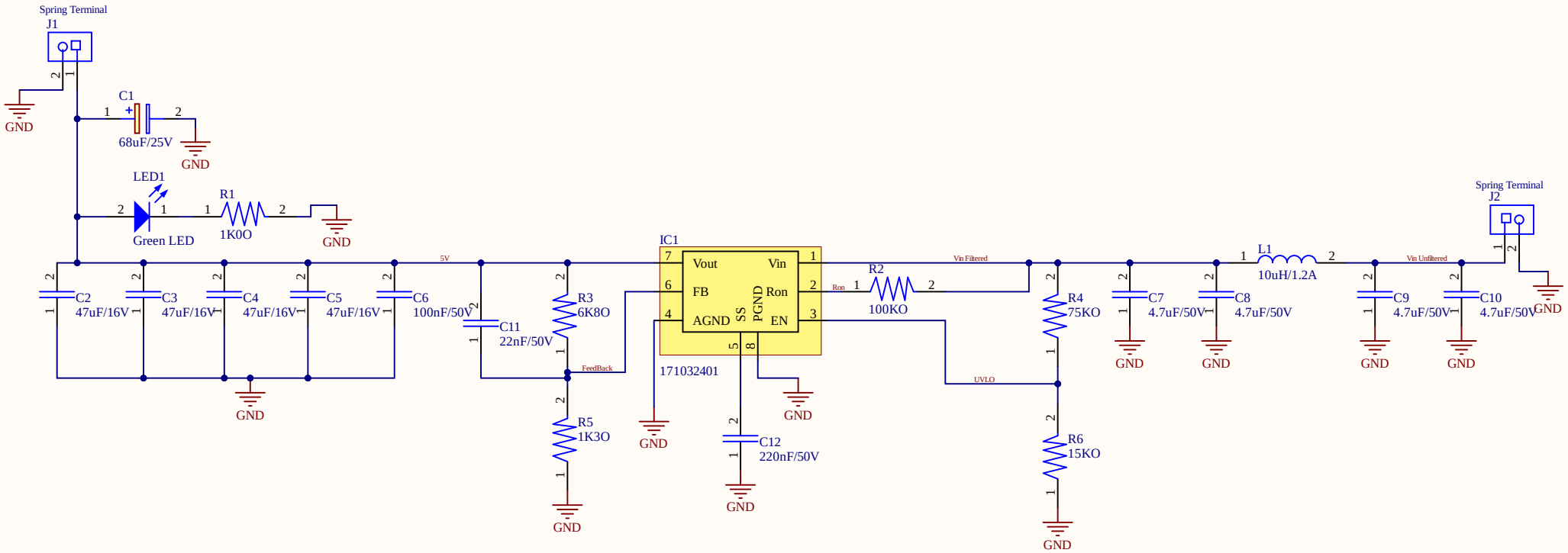

Alpha Electric		OPEN SOURCE. FREE to DISTRIBUTE.
Project: WPT 5V DC DC Converter Round 1	Variant: [No Variations]	
Page Contents: Schematics.SchDoc		Checked By: Lingke
Size: -	DWG No: *	Revision 1.0
Date: 22/8/2021	Drawn By: Lingke	Sheet * of *