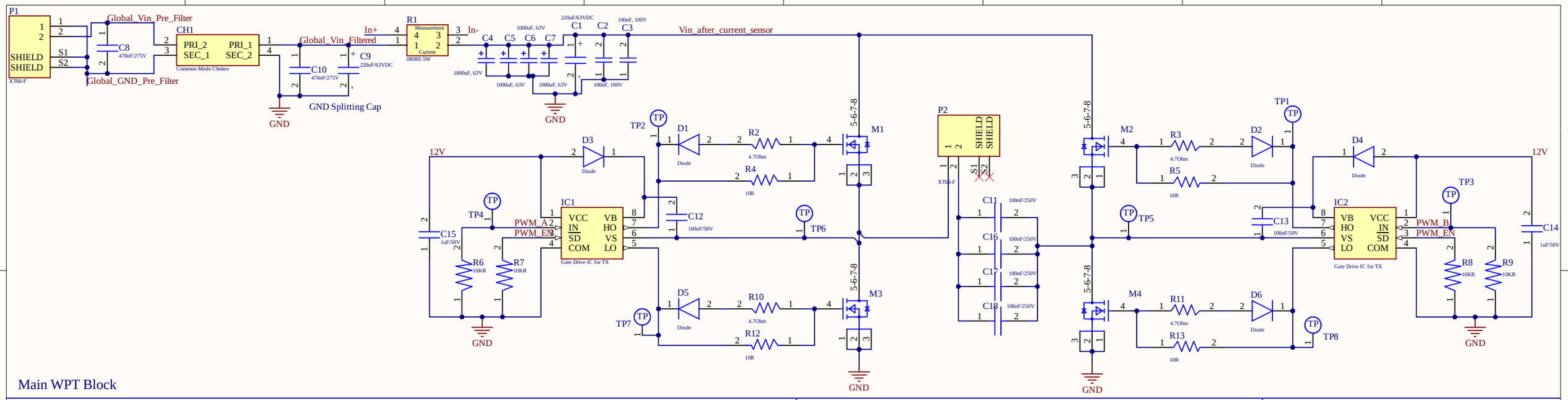

Main WPT Block

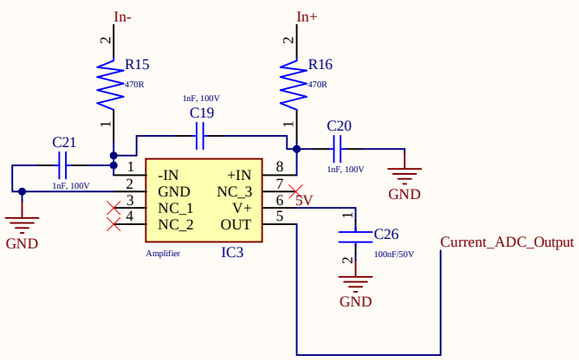

Current Sensor Block

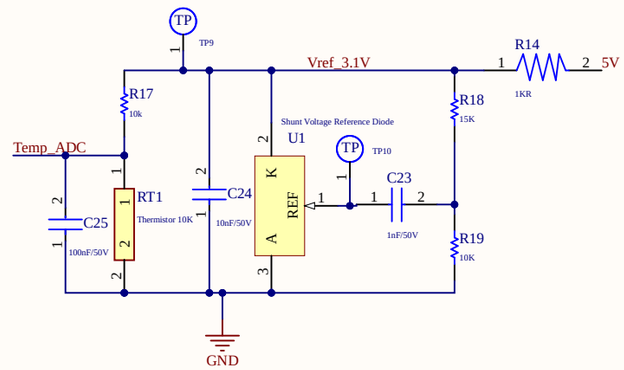

Temperature Sensor Block

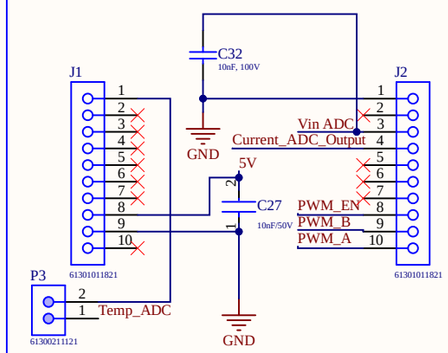

TinyPICO MCU Connection

DCDC Adjustable Ouptut (Feedback at 12V), Input up to 100V, Max Dropout = 1V

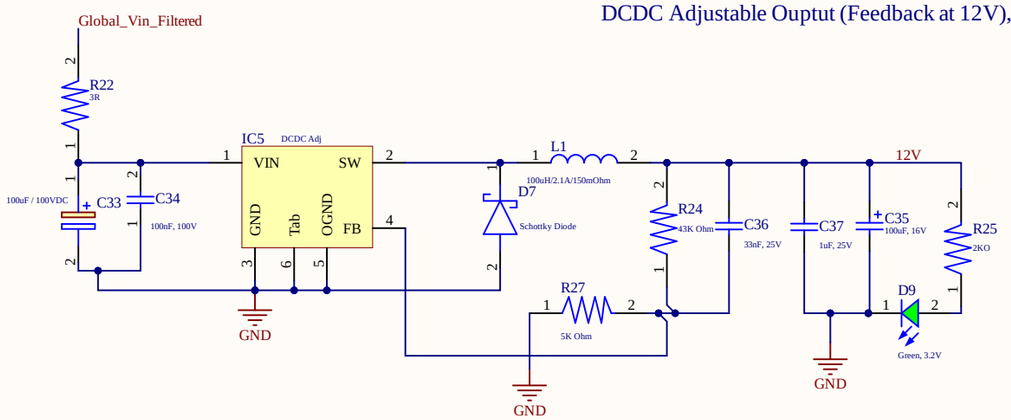

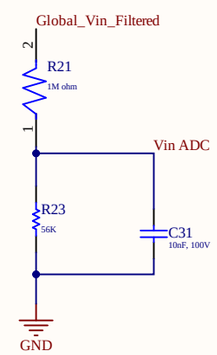

Vin ADC

5V DCDC, step down from 12V

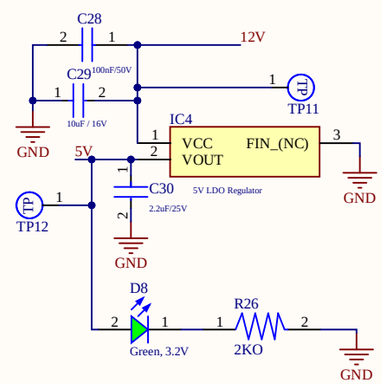

M5 M6 M7 M8 — M3 Mounting Hole

Mounting Hole M3

NUS		OPEN SOURCE. FREE to DISTRIBUTE.	
Project: WPT Round 3		Variant: [No Variations]	
Page Contents: Schematics.SchDoc		Checked By: Lingke	
Size: -	DWG No: *		Revision 1.6
Date: 31/12/2021	Drawn By: Lingke	Sheet 1	of 1