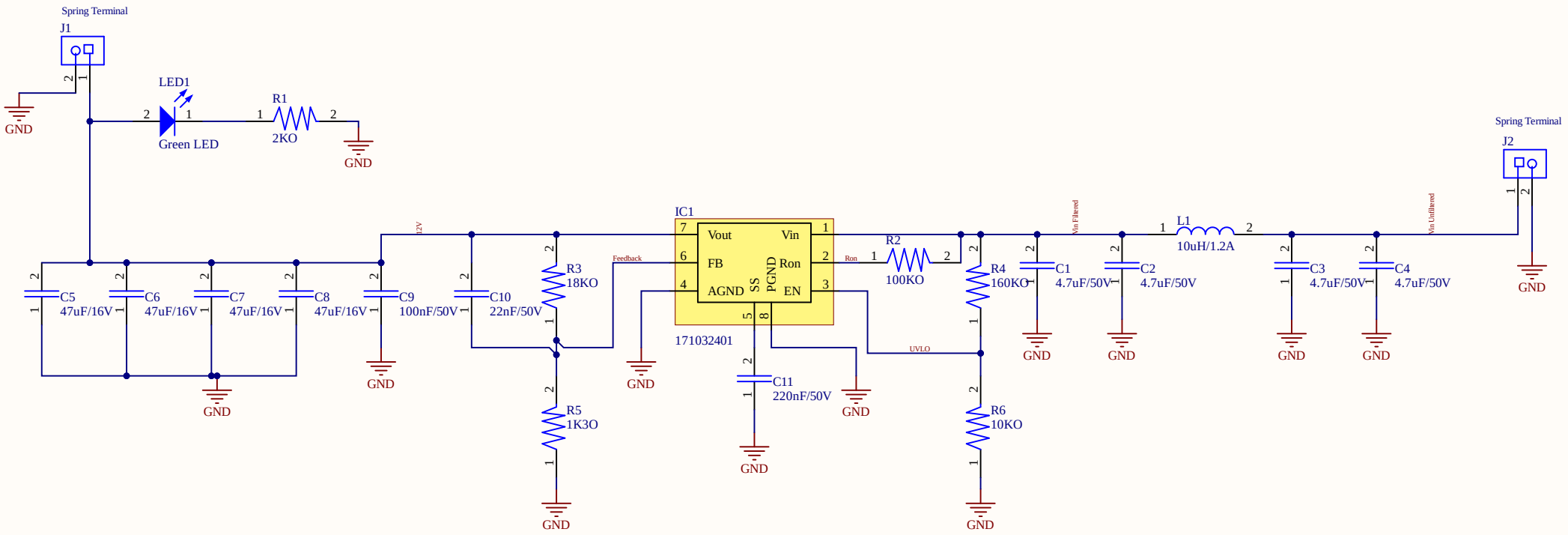


| | |
|---|---|
| Alpha Electric | OPEN SOURCE. FREE to DISTRIBUTE. |
| Project: WPT 12V DC DC Round 1 | Variant: [No Variations] |
| Page Contents: Schematics.SchDoc | Checked By: Lingke |
| Size: - / DWG No: * | Revision 1.0 |
| Date: 31/1/2021 / Drawn By: Lingke | Sheet * of * |