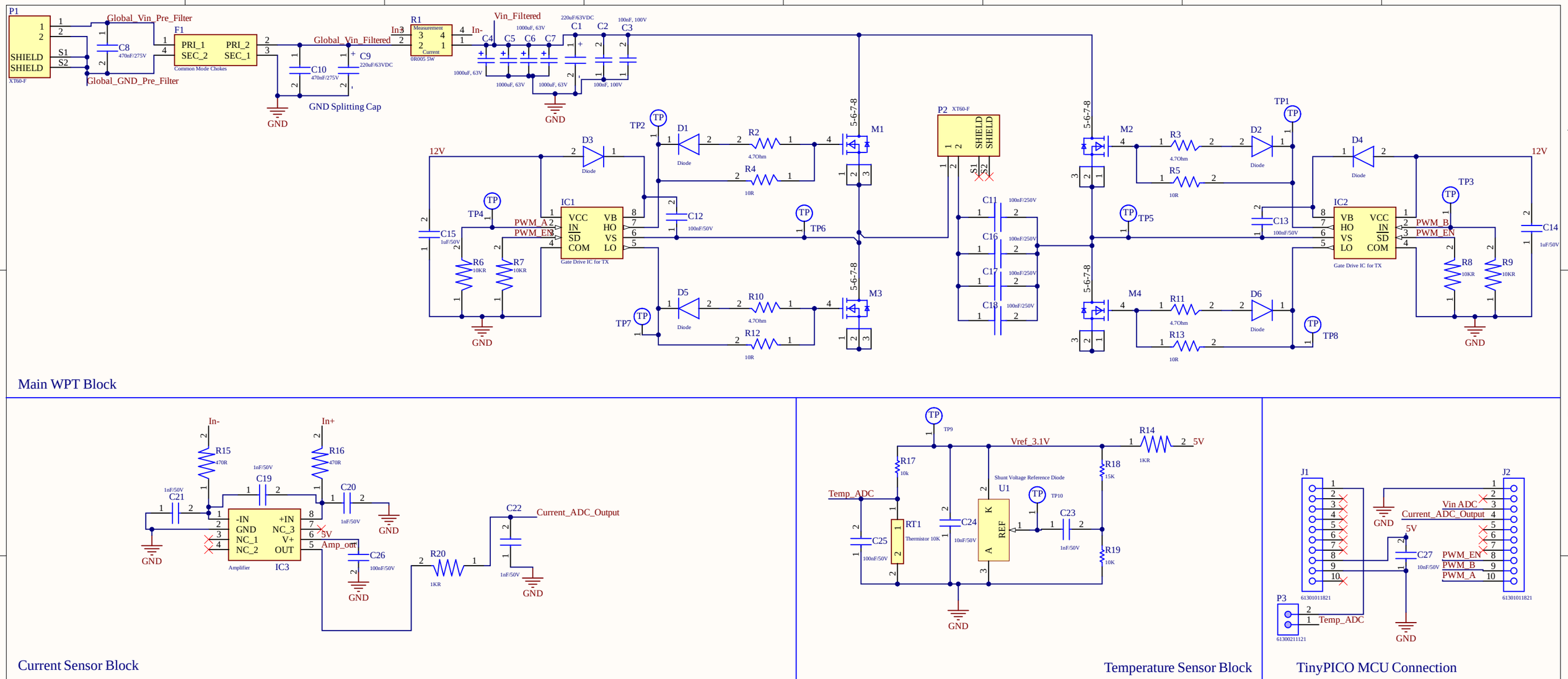


Main WPT Block




Current Sensor Block




Temperature Sensor Block




TinyPICO MCU Connection

DCDC Adjustable Ouptut (Feedback at 12V), Input up to 100V, Max Dropout = 1V

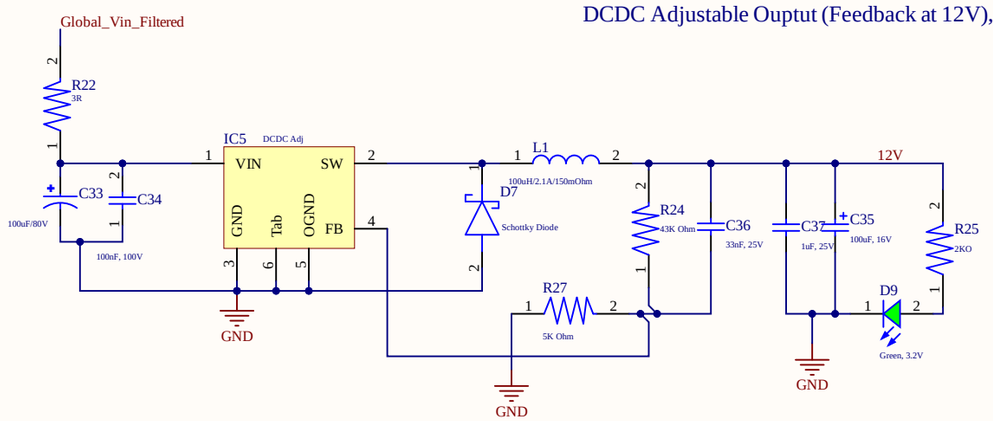


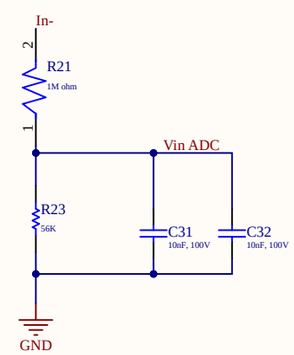


Vin ADC

5V DCDC, step down from 12V

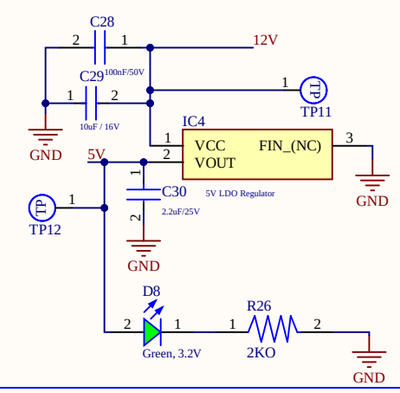


M5 M6 M7 M8 — M3 Mounting Hole

Mounting Hole M3

| | | | |
|---|---|---|---|
| NUS | | | OPEN SOURCE. FREE to DISTRIBUTE. |
| Project: WPT Round 3 | | Variant: [No Variations] | |
| Page Contents: Schematics.SchDoc | | | Checked By: Lingke |
| Size: - | DWG No: * | | Revision 1.2 |
| Date: 21/12/2021 | Drawn By: Lingke | Sheet 1 | of 1 |