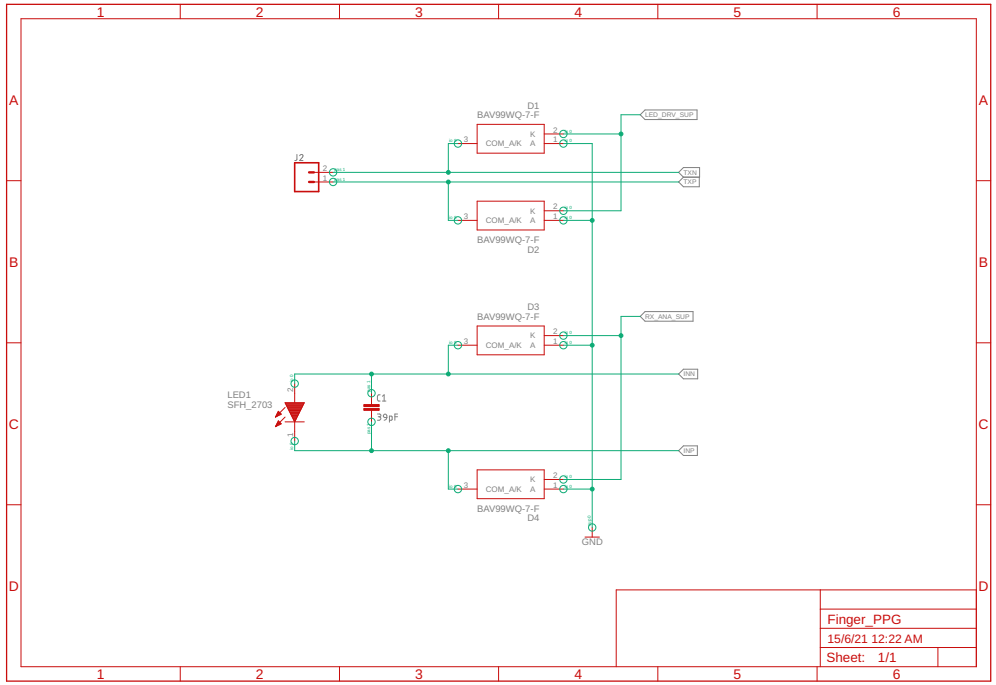
D1
BAV99WQ-7-F
D2
BAV99WQ-7-F
D3
BAV99WQ-7-F
D4
BAV99WQ-7-F
COM_A/K
J2
LED1
SFH_2703
C1
39pF
LED_DRV_SUP
TXN
TXP
RX_ANA_SUP
INN
INP
GND
Finger_PPG
15/6/21 12:22 AM
Sheet: 1/1

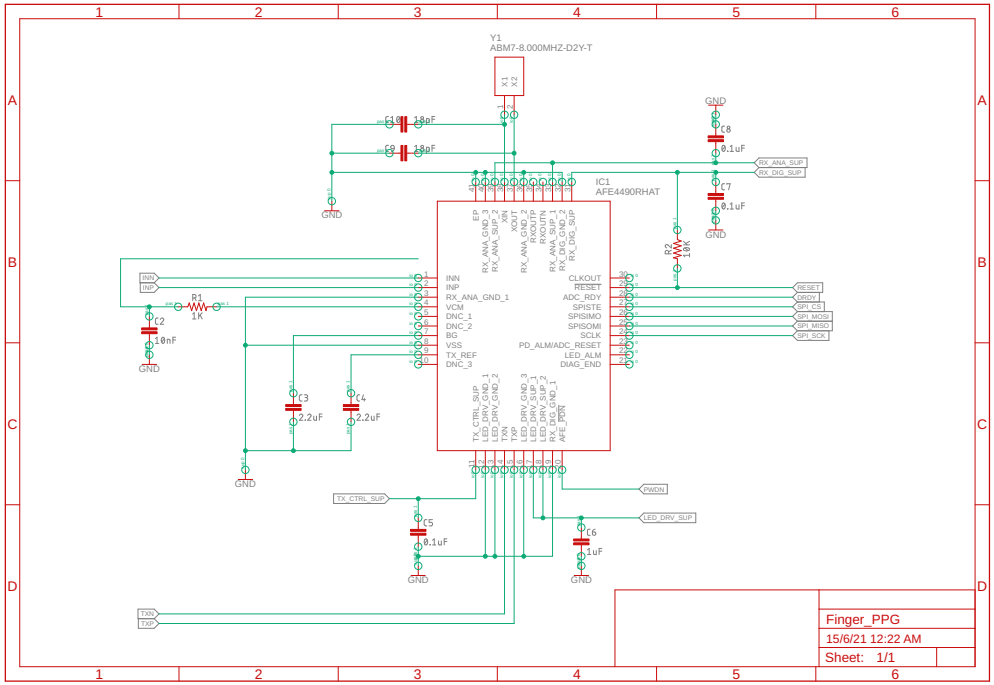
Y1
ABM7-8.000MHZ-D2Y-T
C10
18pF
C9
18pF
C8
0.1uF
C7
0.1uF
IC1
AFE4490RHAT
R2
10K
R1
1K
C2
10nF
C3
2.2uF
C4
2.2uF
C5
0.1uF
C6
1uF
INN
INP
RESET
DRDY
SPI_CS
SPI_MOSI
SPI_MISO
SPI_SCK
PWDN
LED_DRV_SUP
TX_CTRL_SUP
RX_ANA_SUP
RX_DIG_SUP
GND
Finger_PPG
15/6/21 12:22 AM
Sheet: 1/1

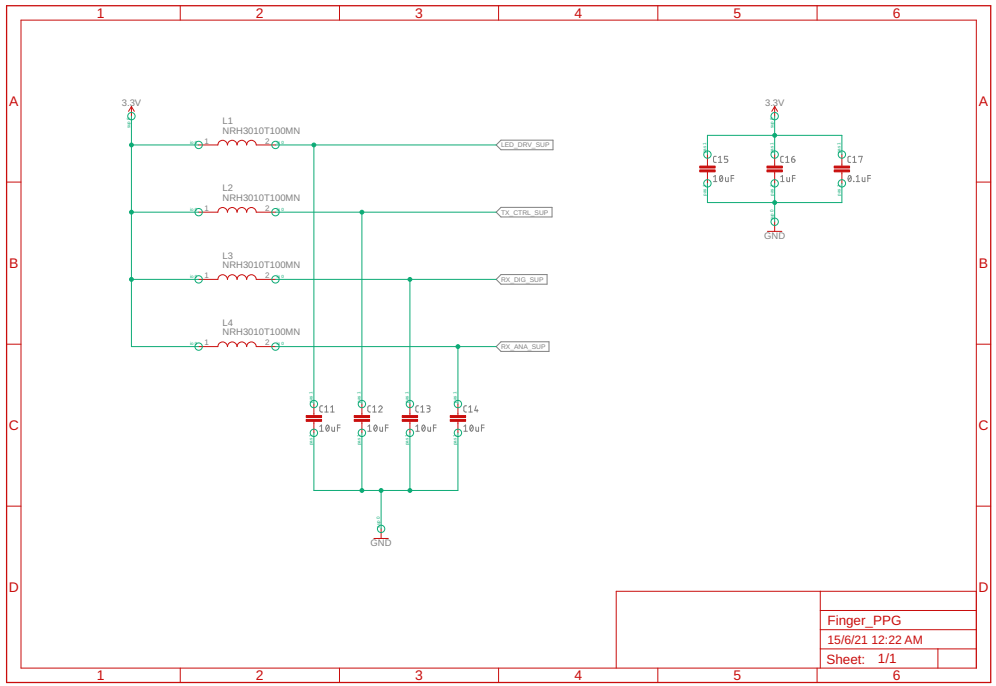
3.3V
L1
NRH3010T100MN
L2
NRH3010T100MN
L3
NRH3010T100MN
L4
NRH3010T100MN
LED_DRV_SUP
TX_CTRL_SUP
RX_DIG_SUP
RX_ANA_SUP
C11
10uF
C12
10uF
C13
10uF
C14
10uF
C15
10uF
C16
1uF
C17
0.1uF
GND
Finger_PPG
15/6/21 12:22 AM
Sheet: 1/1

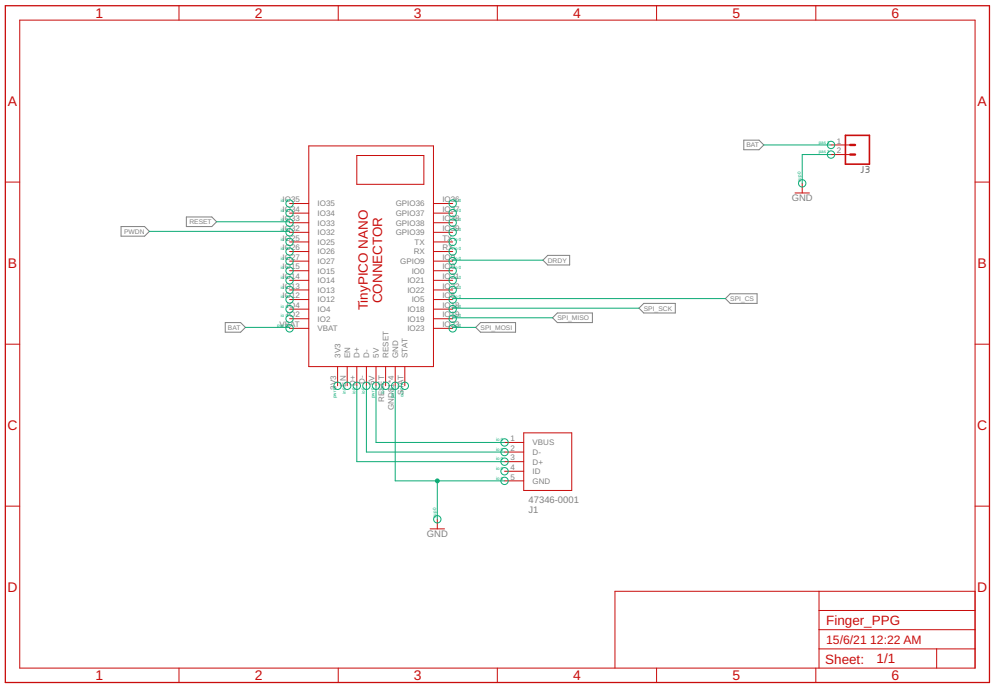
TinyPICO NANO
CONNECTOR
PWDN
RESET
BAT
DRDY
SPI_CS
SPI_SCK
SPI_MISO
SPI_MOSI
J3
VBUS
D-
D+
ID
GND
47346-0001
J1
GND
Finger_PPG
15/6/21 12:22 AM
Sheet: 1/1