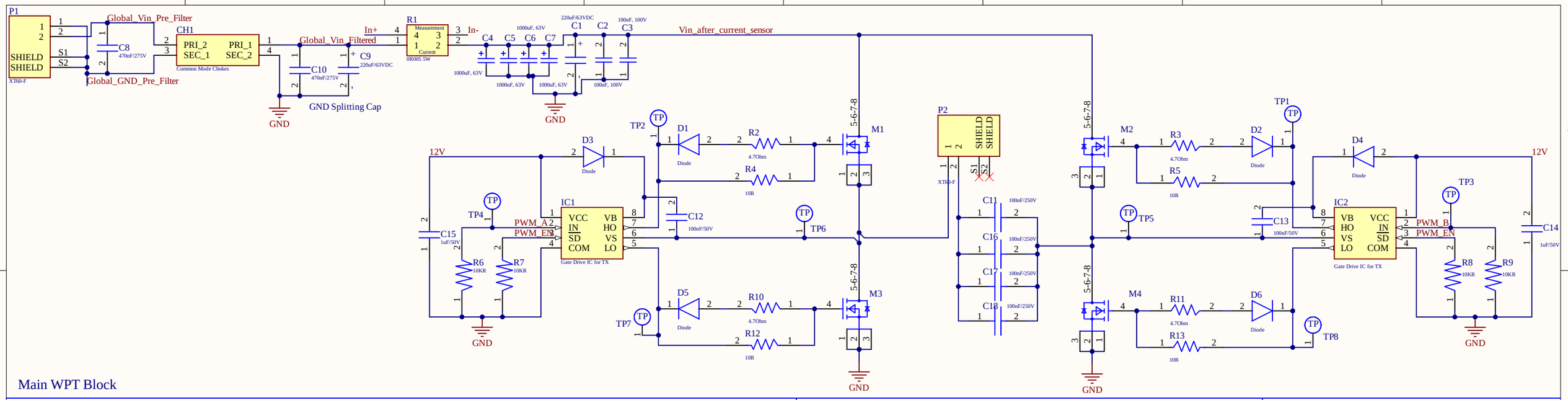

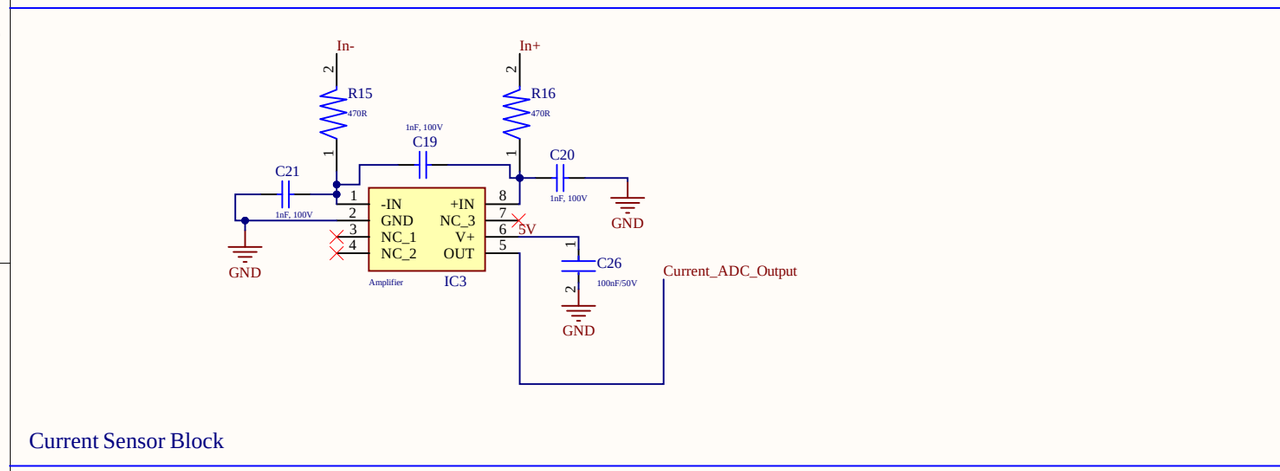

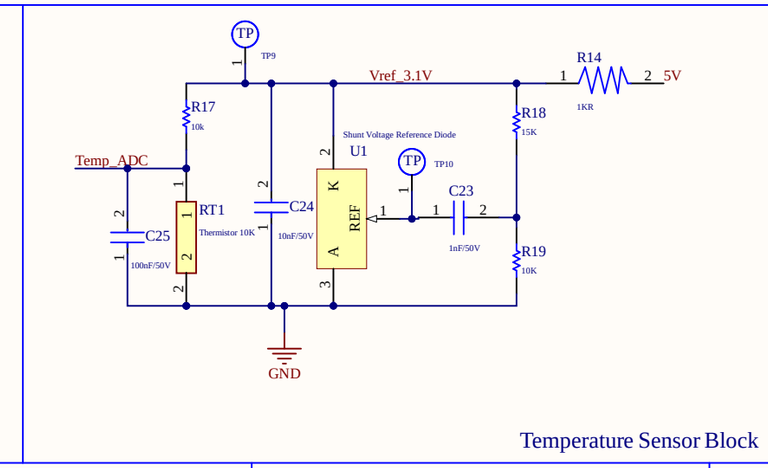

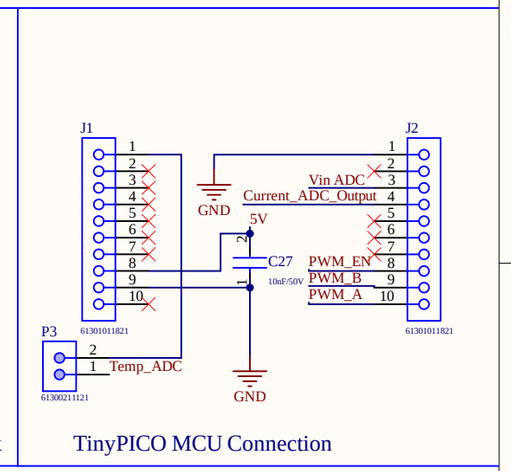

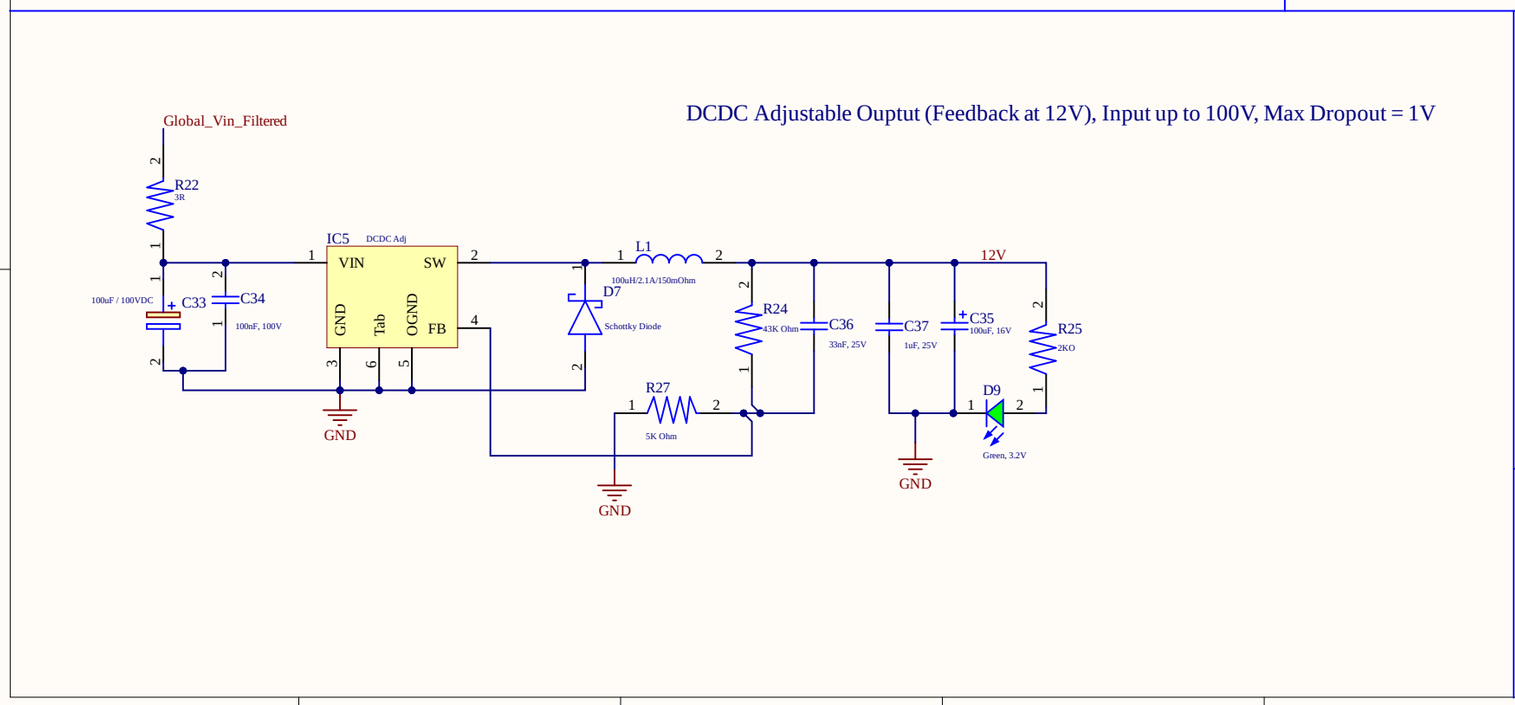

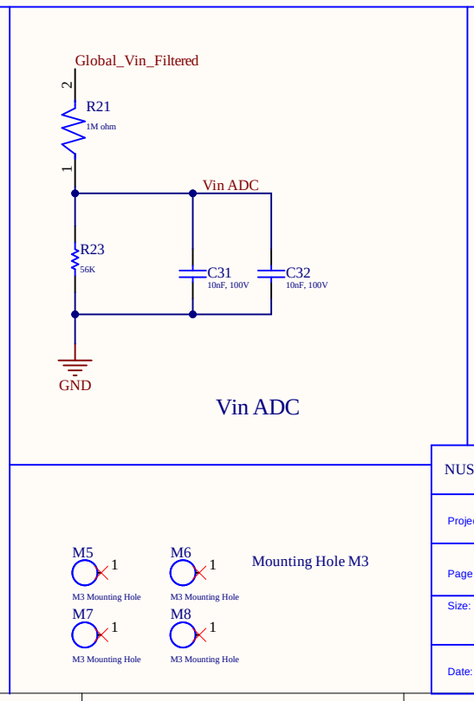

NUS		OPEN SOURCE. FREE to DISTRIBUTE.	
Project: WPT Round 3		Variant: [No Variations]	
Page Contents: Schematics.SchDoc			Checked By: Lingke
Size: -	DWG No: *		Revision 1.5
Date: 28/12/2021	Drawn By: Lingke	Sheet 1	of 1