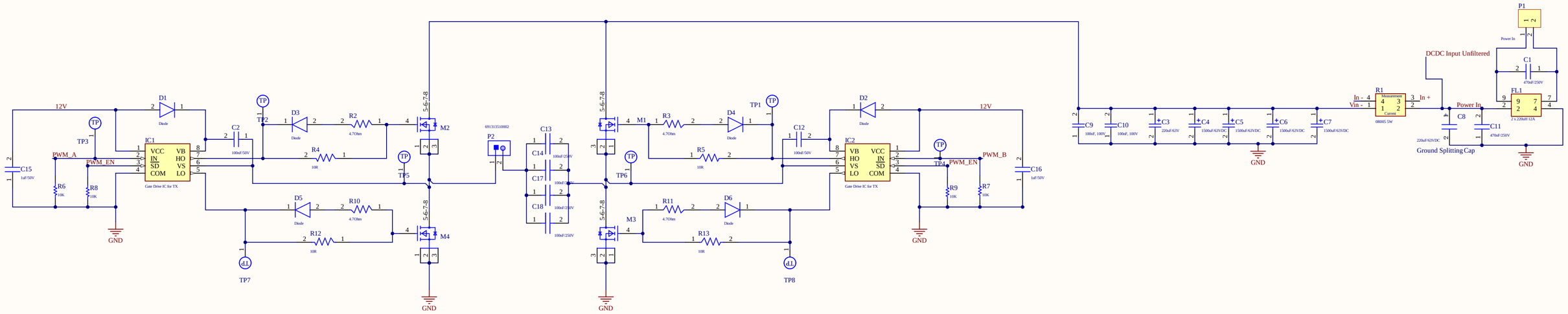

Main WPT Block

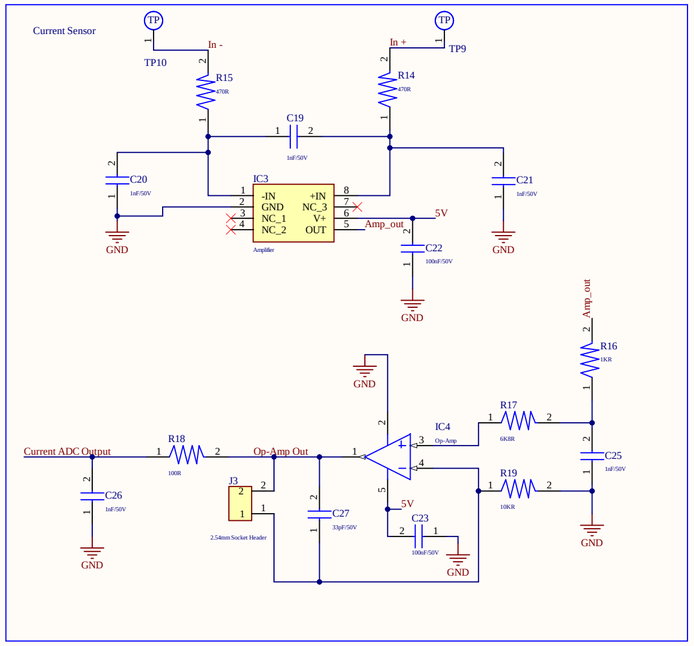

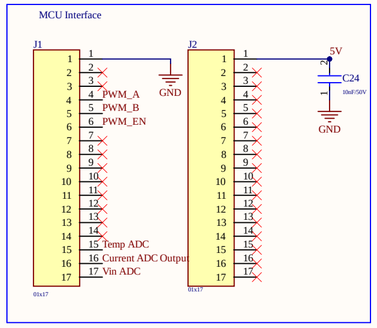

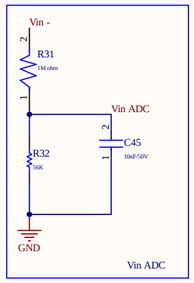

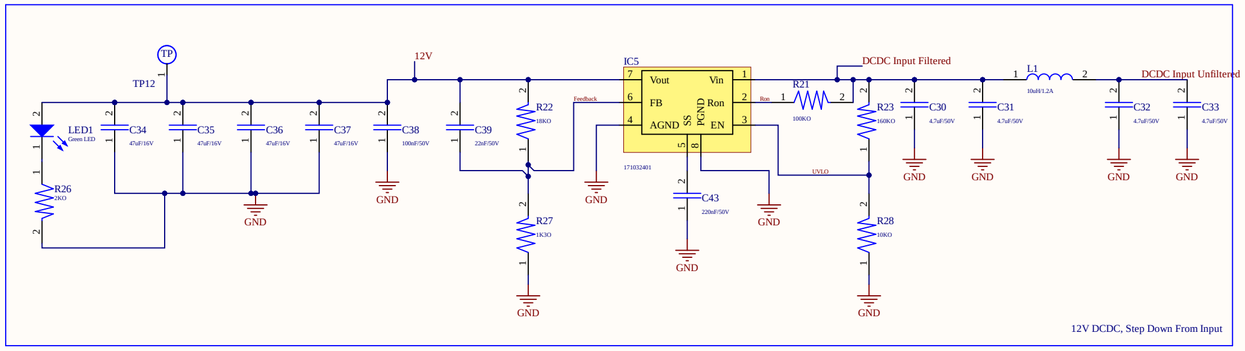

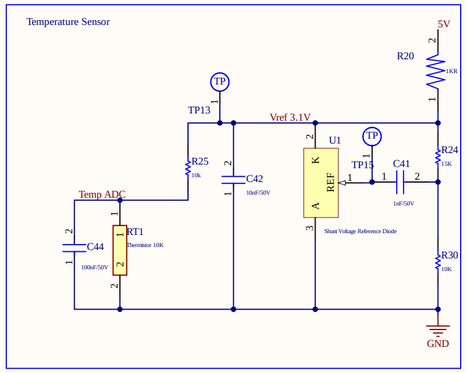

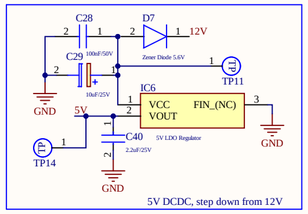

Alpha Electric			OPEN SOURCE. FREE to DISTRIBUTE.
Project: WPT Round 2 TX		Variant: [No Variations]	
Page Contents: Schematics.SchDoc			Checked By: Lingke
Size: A2	DWG No: *		Revision: 1.1
Date: 28/3/2021	Drawn By: Lingke	Sheet *	of *