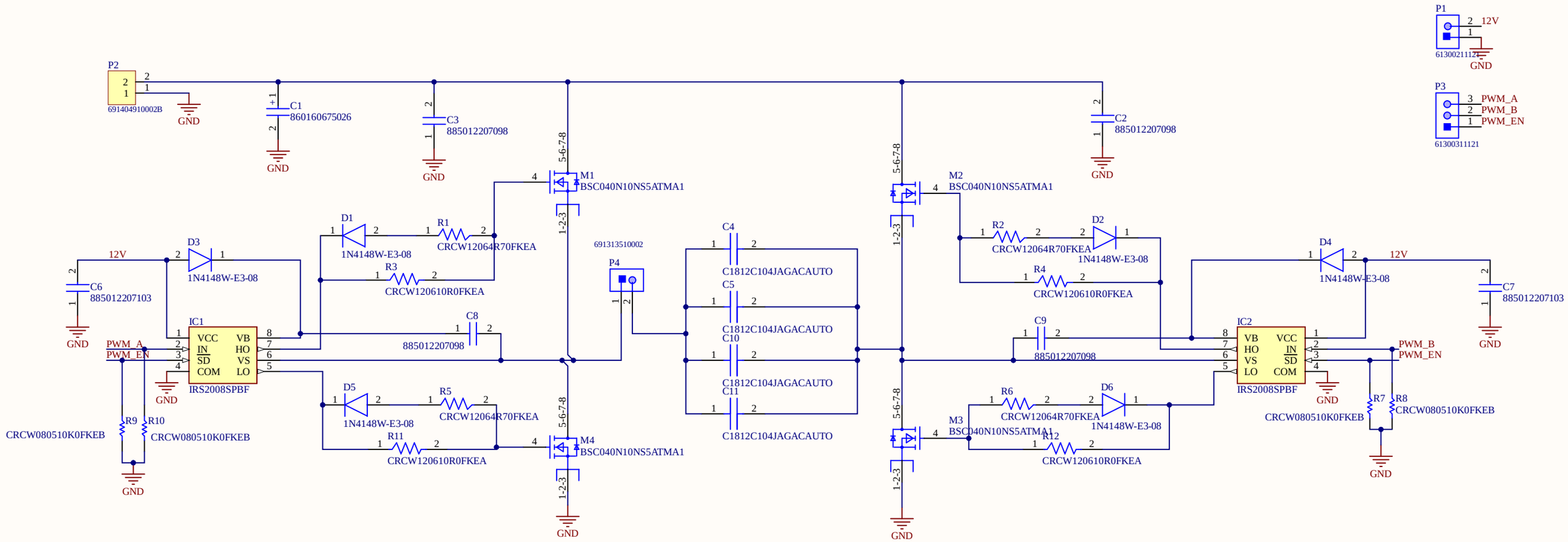

Alpha Electric	OPEN SOURCE. FREE to DISTRIBUTE.
Project: WPT TX Round 1	Variant: [No Variations]
Page Contents: Schematics.SchDoc	Checked By: *
Size: A3 / DWG No: 1	Revision 1.0
Date: 6/1/2021 / Drawn By: Lingke	Sheet * of *