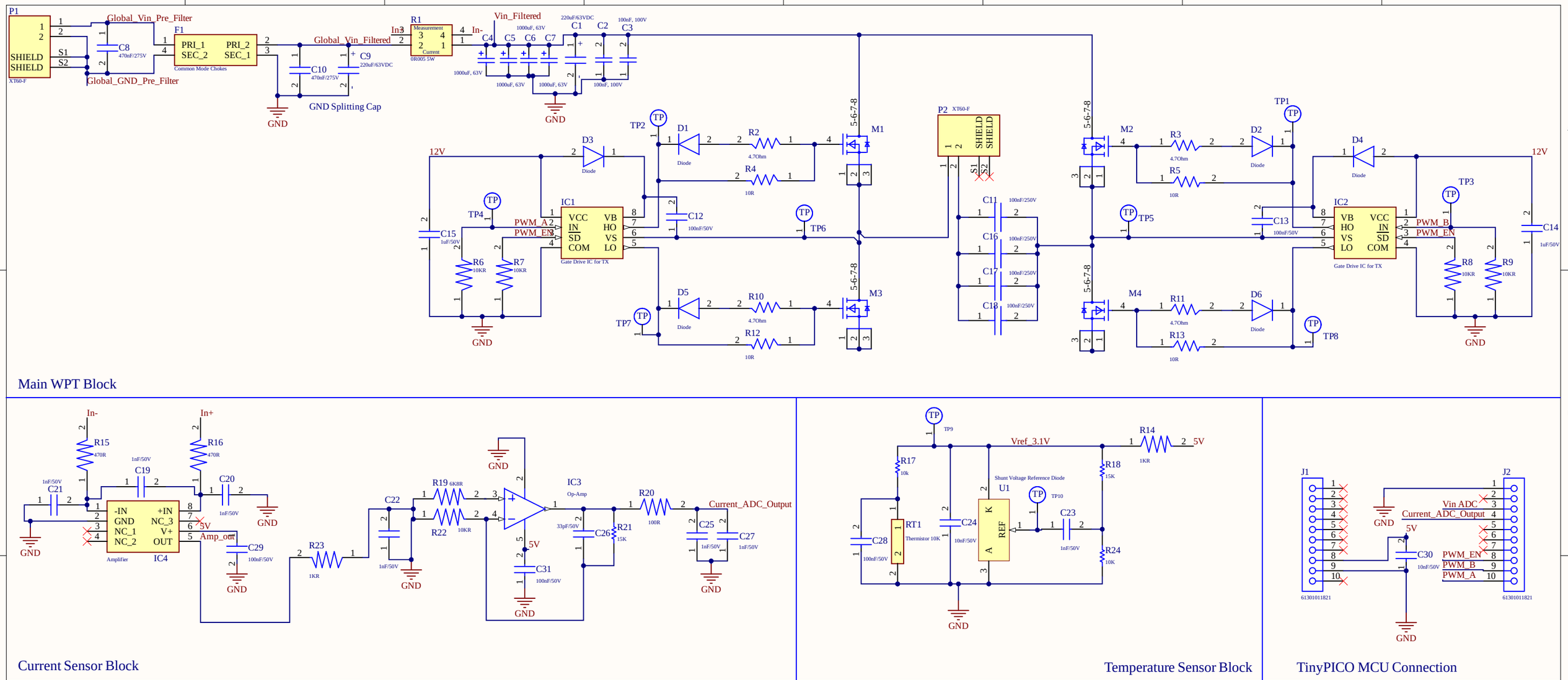

Main WPT Block

Current Sensor Block

Temperature Sensor Block

TinyPICO MCU Connection

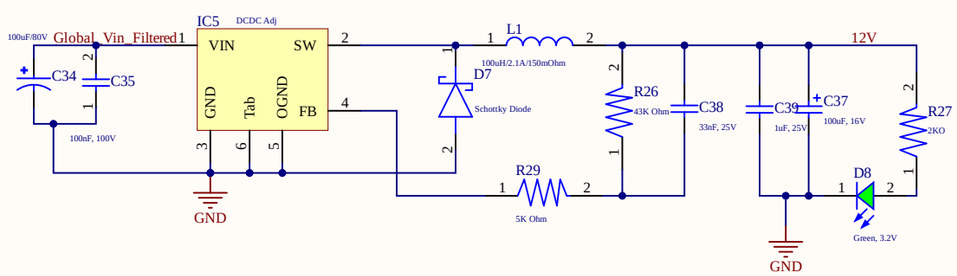

DCDC Adjustable Ouptut (Feedback at 12V), Input up to 100V, Max Dropout = 1V

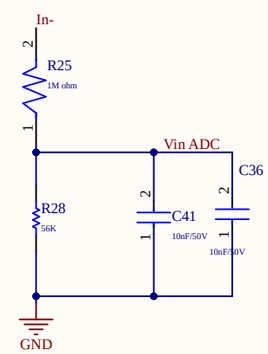

Vin ADC

5V DCDC, step down from 12V

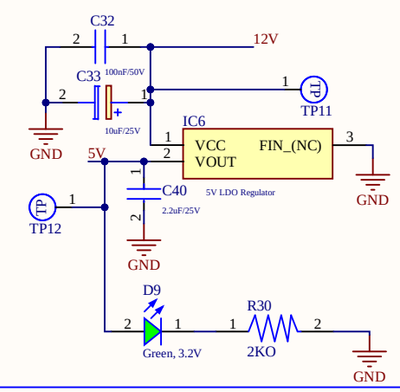

M5 M6 M7 M8 — M3 Mounting Hole

Mounting Hole M3

NUS	OPEN SOURCE. FREE to DISTRIBUTE.
Project: WPT Round 3	Variant: [No Variations]
Page Contents: Schematics.SchDoc	Checked By: Lingke
Size: -	DWG No: *
Revision: 1.0	
Date: 18/12/2021	Drawn By: Lingke
Sheet 1 of 1	