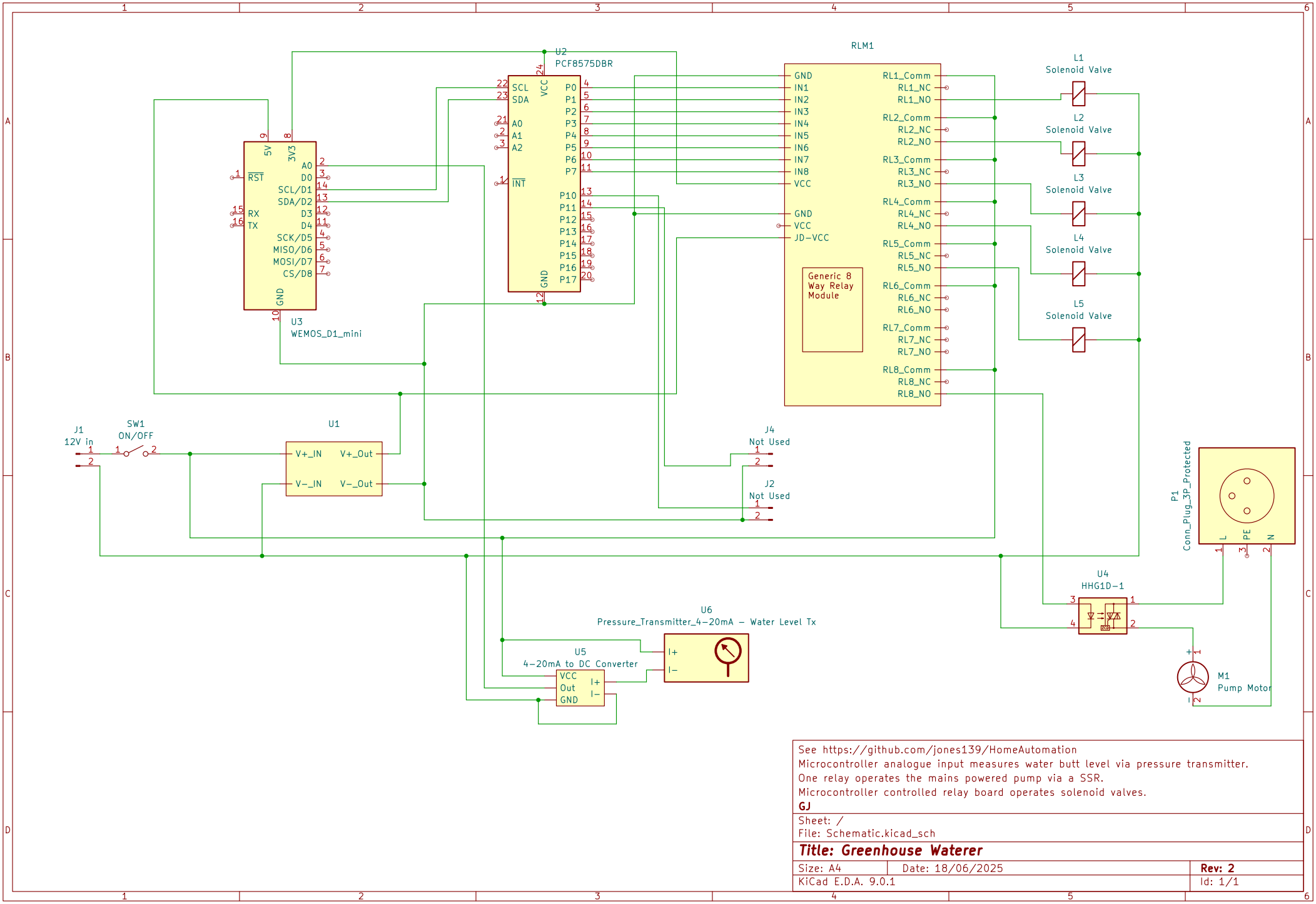

See https://github.com/jones139/HomeAutomation
Microcontroller analogue input measures water butt level via pressure transmitter.
One relay operates the mains powered pump via a SSR.
Microcontroller controlled relay board operates solenoid valves.
GJ

Sheet: /
File: Schematic.kicad_sch

Title: Greenhouse Waterer

Size: A4	Date: 18/06/2025	**Rev: 2**
KiCad E.D.A. 9.0.1		Id: 1/1