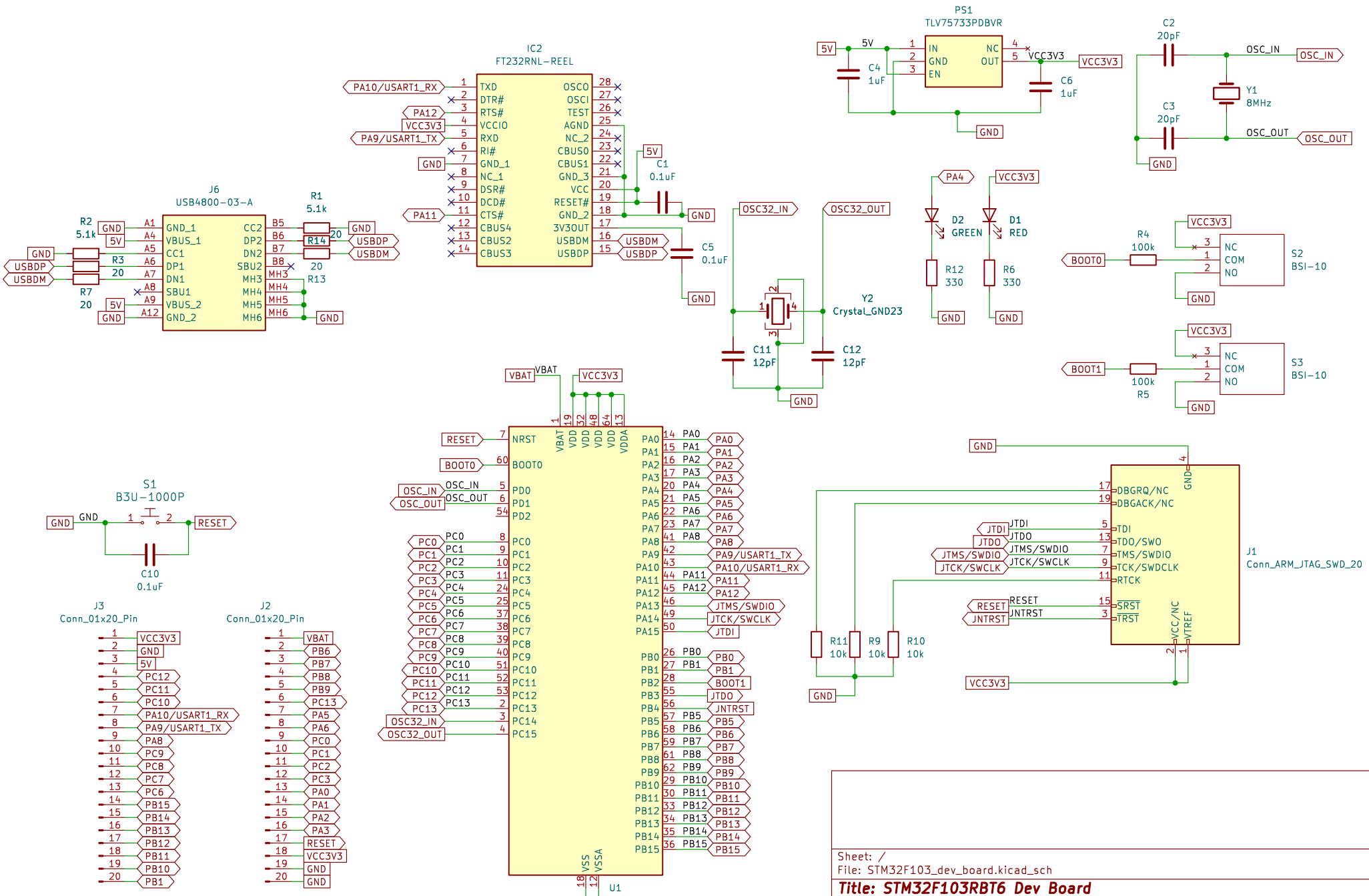
PS1
TLV75733PDBVR
IN
GND
EN
NC
OUT
5V
VCC3V3
C4
1uF
C6
1uF
C2
20pF
C3
20pF
Y1
8MHz
OSC_IN
OSC_OUT
IC2
FT232RNL-REEL
TXD
DTR#
RTS#
VCCIO
RXD
RI#
GND_1
NC_1
DSR#
DCD#
CTS#
CBUS4
CBUS2
CBUS3
OSCO
OSCI
TEST
AGND
NC_2
CBUS0
CBUS1
GND_3
VCC
RESET#
GND_2
3V3OUT
USBDM
USBDP
PA10/USART1_RX
PA12
PA9/USART1_TX
PA11
C1
0.1uF
C5
0.1uF
J6
USB4800-03-A
GND_1
VBUS_1
CC1
DP1
DN1
SBU1
VBUS_2
GND_2
CC2
DP2
DN2
SBU2
MH3
MH4
MH5
MH6
R1
5.1k
R2
5.1k
R3
20
R7
20
R14
20
R13
20
OSC32_IN
OSC32_OUT
Y2
Crystal_GND23
C11
12pF
C12
12pF
PA4
D2
GREEN
D1
RED
R12
330
R6
330
R4
100k
R5
100k
BOOT0
BOOT1
S2
BSI-10
S3
BSI-10
NC
COM
NO
VBAT
NRST
BOOT0
PD0
PD1
PD2
PC0
PC1
PC2
PC3
PC4
PC5
PC6
PC7
PC8
PC9
PC10
PC11
PC12
PC13
PC14
PC15
PA0
PA1
PA2
PA3
PA4
PA5
PA6
PA7
PA8
PA9
PA10
PA11
PA12
PA13
PA14
PA15
PB0
PB1
PB2
PB3
PB4
PB5
PB6
PB7
PB8
PB9
PB10
PB11
PB12
PB13
PB14
PB15
VDD
VDDA
VSS
VSSA
JTMS/SWDIO
JTCK/SWCLK
JTDI
JTDO
JNTRST
U1
STM32F103RBTx
S1
B3U-1000P
C10
0.1uF
J3
Conn_01x20_Pin
J2
Conn_01x20_Pin
R11
10k
R9
10k
R10
10k
J1
Conn_ARM_JTAG_SWD_20
DBGRQ/NC
DBGACK/NC
TDI
TDO/SWO
TMS/SWDIO
TCK/SWDCLK
RTCK
SRST
TRST
VCC/NC
VTREF
Sheet: /
File: STM32F103_dev_board.kicad_sch
Title: STM32F103RBT6 Dev Board
Size: A4
Date: 2023-12-14
Rev: 1.2.1
KiCad E.D.A. kicad 7.0.9
Id: 1/1