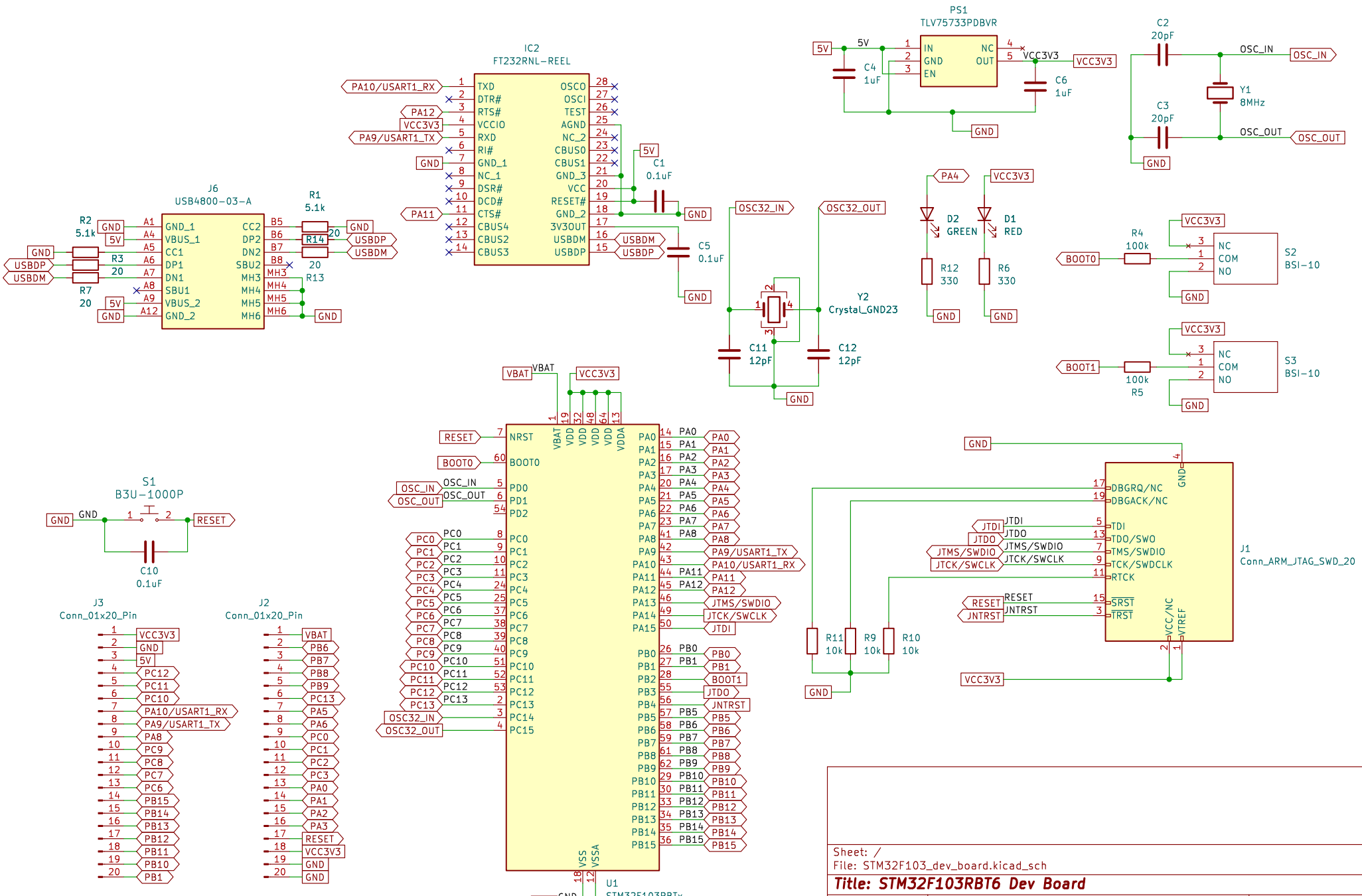

Sheet: /
File: STM32F103_dev_board.kicad_sch

Title: STM32F103RBT6 Dev Board

Size: A4	Date: 2023-12-14	Rev: 1.2.0
KiCad E.D.A. kicad 7.0.9		Id: 1/1