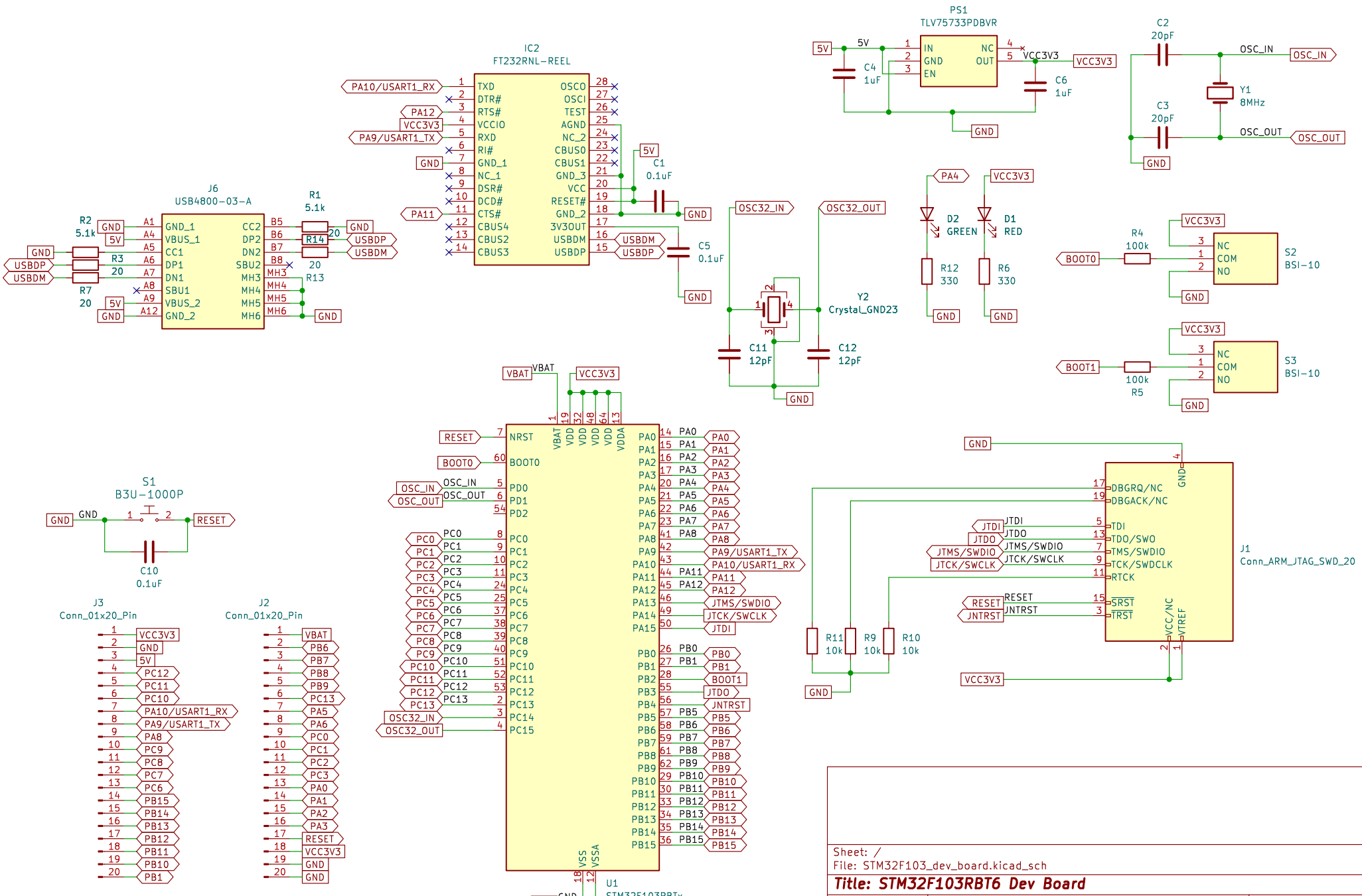
PS1
TLV75733PDBVR
IN
GND
EN
NC
OUT
5V
VCC3V3
C4
1uF
C6
1uF
C2
20pF
C3
20pF
Y1
8MHz
OSC_IN
OSC_OUT
IC2
FT232RNL-REEL
TXD
DTR#
RTS#
VCCIO
RXD
RI#
GND_1
NC_1
DSR#
DCD#
CTS#
CBUS4
CBUS2
CBUS3
OSCO
OSCI
TEST
AGND
NC_2
CBUS0
CBUS1
GND_3
VCC
RESET#
GND_2
3V3OUT
USBDM
USBDP
PA10/USART1_RX
PA12
PA9/USART1_TX
PA11
C1
0.1uF
C5
0.1uF
J6
USB4800-03-A
GND_1
VBUS_1
CC1
DP1
DN1
SBU1
VBUS_2
GND_2
CC2
DP2
DN2
SBU2
MH3
MH4
MH5
MH6
R1
5.1k
R2
5.1k
R3
20
R7
20
R14
20
R13
20
OSC32_IN
OSC32_OUT
Y2
Crystal_GND23
C11
12pF
C12
12pF
PA4
D2
GREEN
D1
RED
R12
330
R6
330
R4
100k
R5
100k
BOOT0
BOOT1
S2
BSI-10
S3
BSI-10
NC
COM
NO
VBAT
NRST
BOOT0
PD0
PD1
PD2
VDD
VDDA
VSS
VSSA
U1
STM32F103RBTx
S1
B3U-1000P
RESET
C10
0.1uF
J3
Conn_01x20_Pin
J2
Conn_01x20_Pin
R11
10k
R9
10k
R10
10k
J1
Conn_ARM_JTAG_SWD_20
DBGRQ/NC
DBGACK/NC
TDI
TDO/SWO
TMS/SWDIO
TCK/SWDCLK
RTCK
SRST
TRST
VCC/NC
VTREF
JTDI
JTDO
JTMS/SWDIO
JTCK/SWCLK
JNTRST
Sheet: /
File: STM32F103_dev_board.kicad_sch
Title: STM32F103RBT6 Dev Board
Size: A4
Date: 2023-12-14
Rev: 1.2.1
KiCad E.D.A. kicad 7.0.9
Id: 1/1