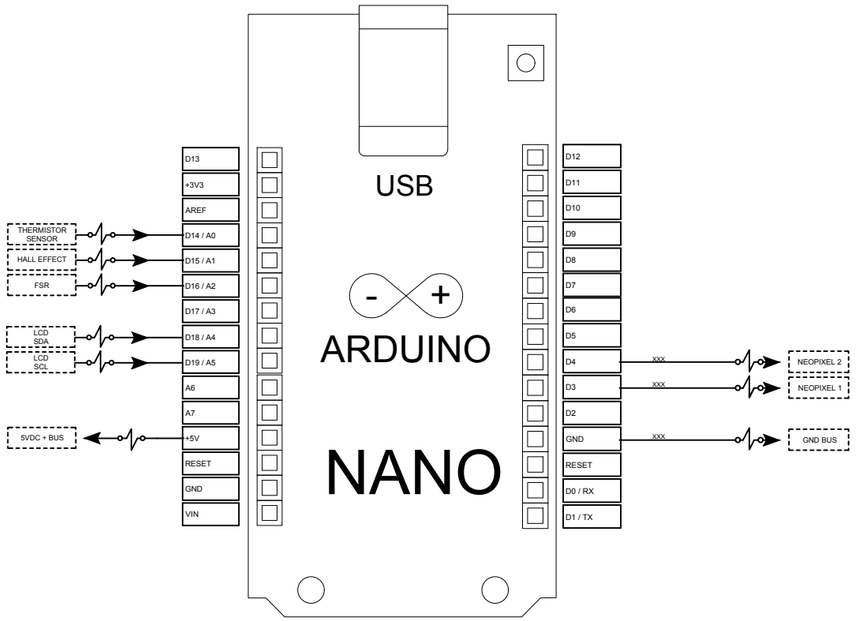

OUTPUTS

OLED SCREEN

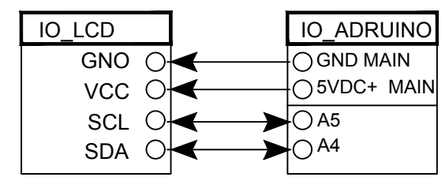

NEO PIXEL RING 1

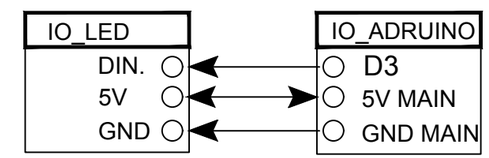

INPUTS

FSR SENSOR

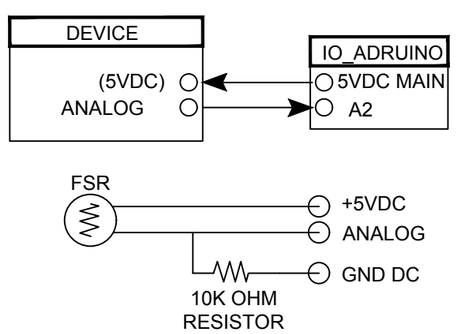

HALL EFFECT SENSOR

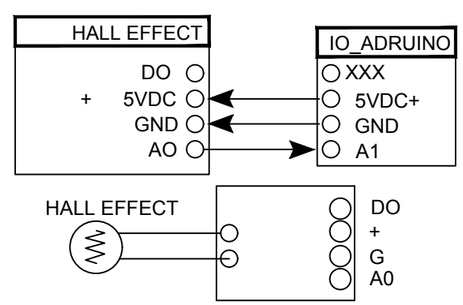

TEMPATURE SENSOR

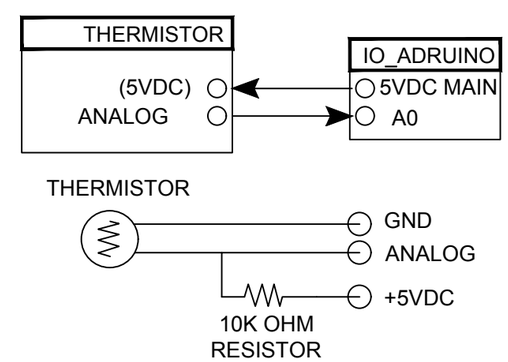

RevNo	Revision note	Date	Signature	Checked

Itemref	Quantity	Title/Name, designation, material, dimension etc		Article No./Reference	
Designed by JONATHAN J	Checked by XXX	Approved by - date XXX - 00/00/00	Filename JRTSWD1	Date 10/01/21	Scale 1:1

JENKINS ROBOTICS

BIOROBOTICS TACTILE SENSOR

JRTSWD1	Edition 0	Sheet 1/1