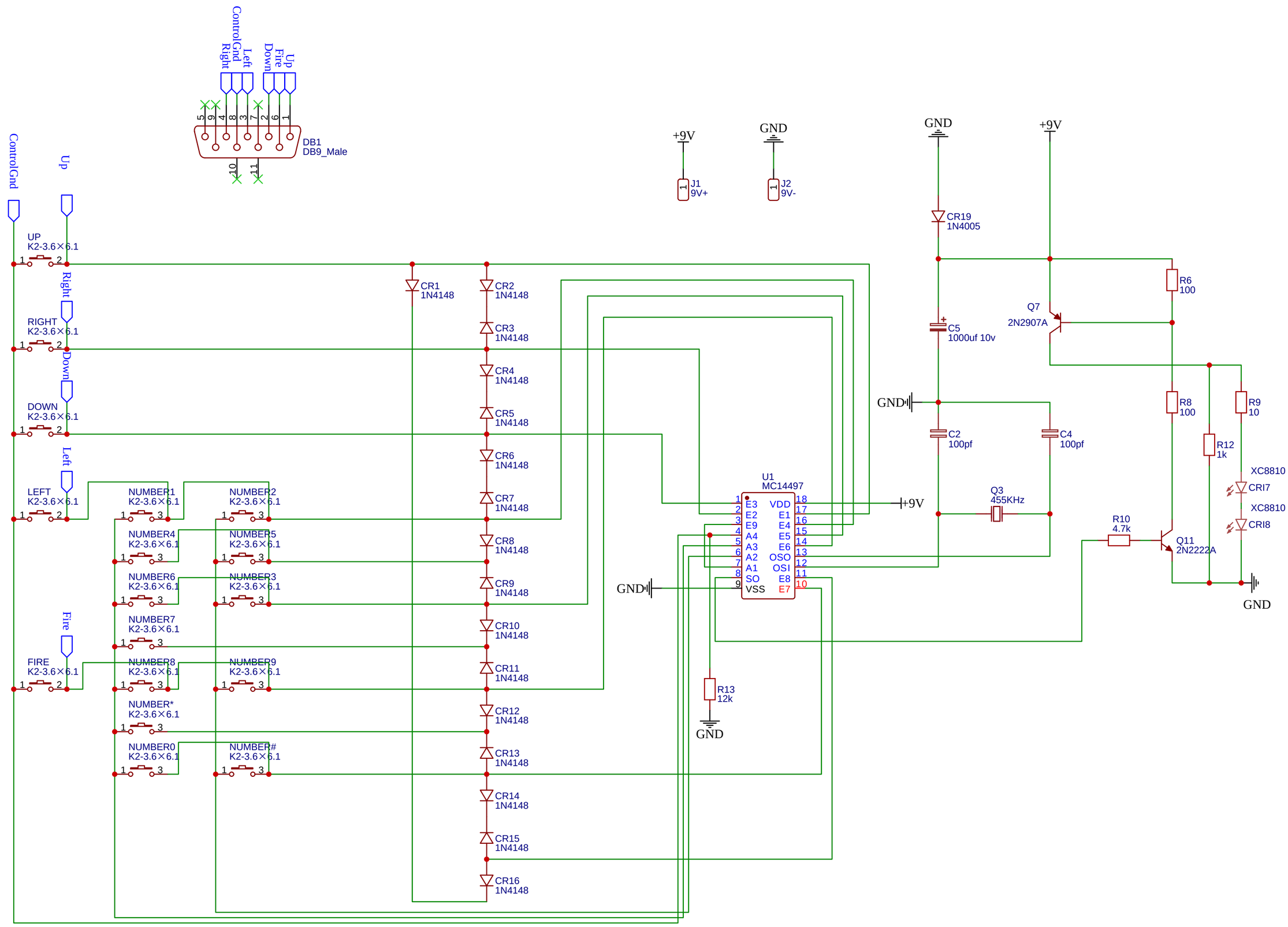

TITLE: EXL100 Joystick Adaptor	REV: 1.0
Company: RE:Enthused	Sheet: 1/1
Date: 2021-10-18 Drawn By: jonn.blanchard	