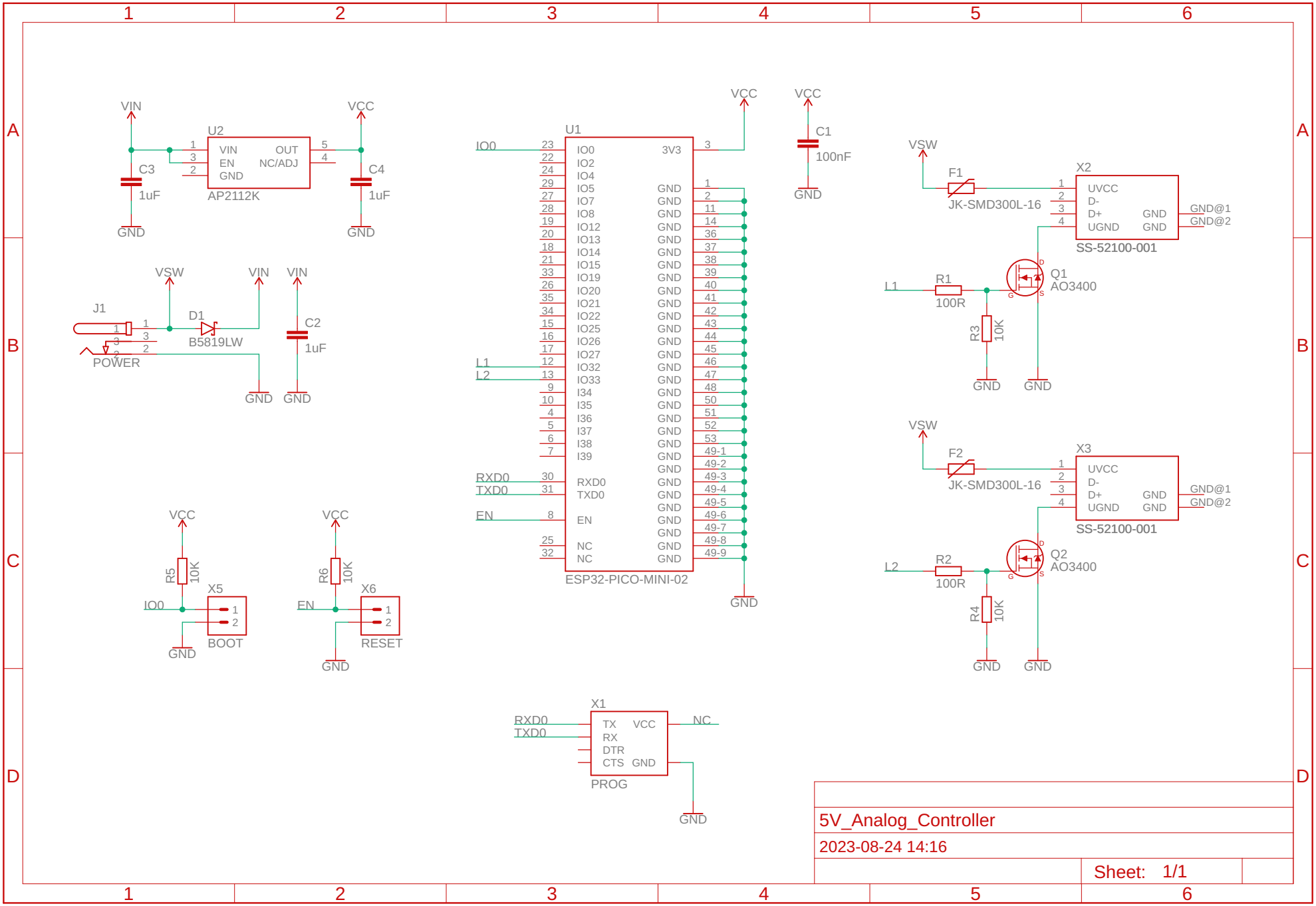
VIN
U2
VIN
EN
GND
OUT
NC/ADJ
AP2112K
VCC
C3
1uF
C4
1uF
GND
VSW
VIN
VIN
J1
D1
B5819LW
POWER
C2
1uF
GND
GND
U1
IO0
L1
L2
RXD0
TXD0
EN
3V3
ESP32-PICO-MINI-02
VCC
C1
100nF
GND
VSW
F1
JK-SMD300L-16
X2
UVCC
D-
D+
UGND
GND
GND
GND@1
GND@2
SS-52100-001
L1
R1
100R
Q1
AO3400
R3
10K
GND
GND
VSW
F2
JK-SMD300L-16
X3
UVCC
D-
D+
UGND
GND
GND
GND@1
GND@2
SS-52100-001
L2
R2
100R
Q2
AO3400
R4
10K
GND
GND
VCC
R5
10K
X5
IO0
BOOT
GND
VCC
R6
10K
X6
EN
RESET
GND
X1
RXD0
TXD0
TX
RX
DTR
CTS
VCC
GND
NC
PROG
GND
5V_Analog_Controller
2023-08-24 14:16
Sheet: 1/1