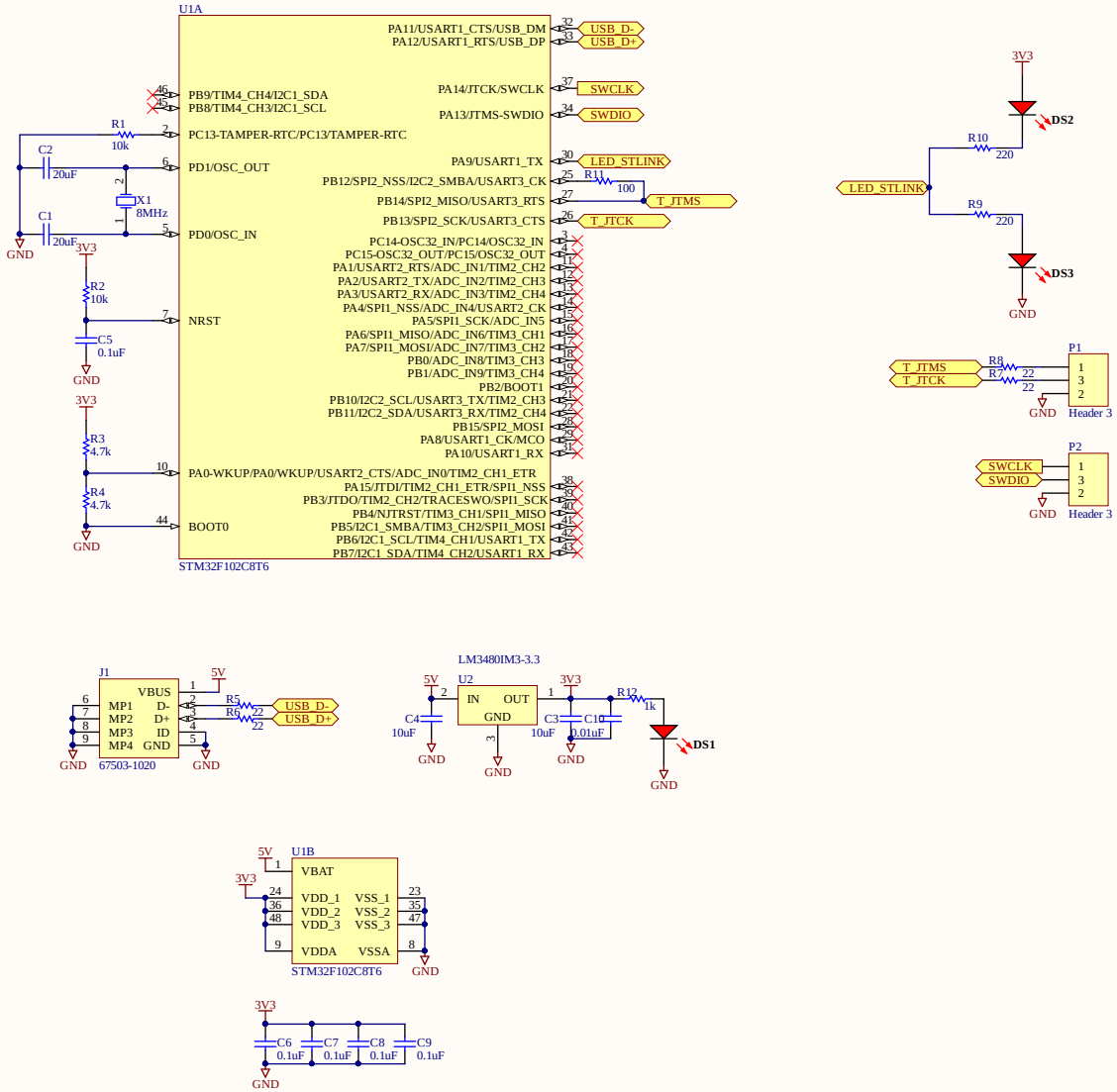

Title: *	A3	Designer:	Revisions:	Notes:
		Company:		
		Dept.:		
		Email:		
File: Sheet2.SchDoc			rev:	sheet: * of * Marked: 11/24/2015