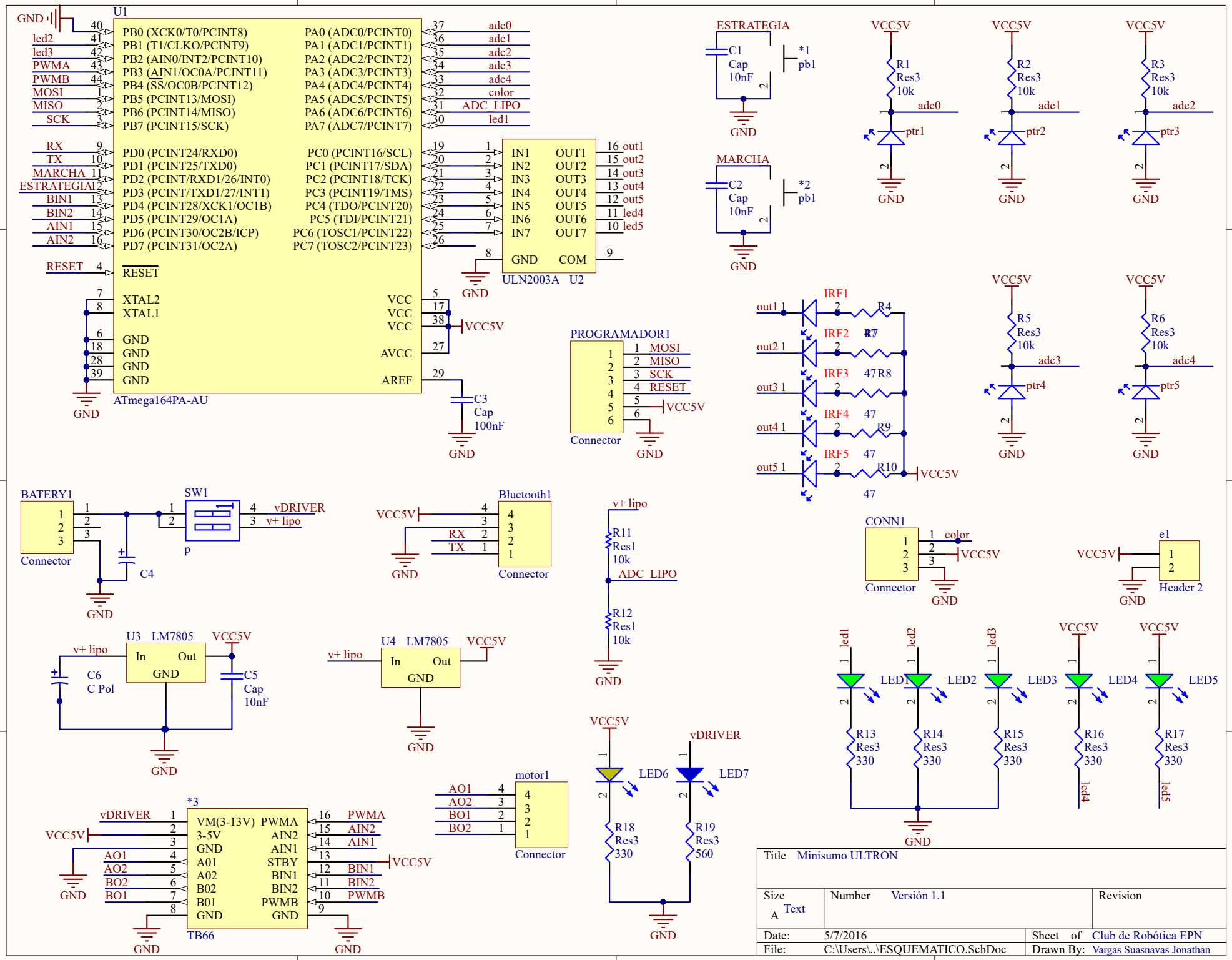
U1
ATmega164PA-AU
PB0 (XCK0/T0/PCINT8)
PB1 (T1/CLKO/PCINT9)
PB2 (AIN0/INT2/PCINT10)
PB3 (AIN1/OC0A/PCINT11)
PB4 (SS/OC0B/PCINT12)
PB5 (PCINT13/MOSI)
PB6 (PCINT14/MISO)
PB7 (PCINT15/SCK)
PD0 (PCINT24/RXD0)
PD1 (PCINT25/TXD0)
PD2 (PCINT/RXD1/26/INT0)
PD3 (PCINT/TXD1/27/INT1)
PD4 (PCINT28/XCK1/OC1B)
PD5 (PCINT29/OC1A)
PD6 (PCINT30/OC2B/ICP)
PD7 (PCINT31/OC2A)
RESET
XTAL2
XTAL1
GND
PA0 (ADC0/PCINT0)
PA1 (ADC1/PCINT1)
PA2 (ADC2/PCINT2)
PA3 (ADC3/PCINT3)
PA4 (ADC4/PCINT4)
PA5 (ADC5/PCINT5)
PA6 (ADC6/PCINT6)
PA7 (ADC7/PCINT7)
PC0 (PCINT16/SCL)
PC1 (PCINT17/SDA)
PC2 (PCINT18/TCK)
PC3 (PCINT19/TMS)
PC4 (TDO/PCINT20)
PC5 (TDI/PCINT21)
PC6 (TOSC1/PCINT22)
PC7 (TOSC2/PCINT23)
VCC
AVCC
AREF
ULN2003A U2
IN1 IN2 IN3 IN4 IN5 IN6 IN7
OUT1 OUT2 OUT3 OUT4 OUT5 OUT6 OUT7
GND COM
PROGRAMADOR1
Connector
MOSI
MISO
SCK
RESET
ESTRATEGIA
MARCHA
C1 Cap 10nF
C2 Cap 10nF
pb1
VCC5V
R1 Res3 10k
R2 Res3 10k
R3 Res3 10k
R5 Res3 10k
R6 Res3 10k
ptr1
ptr2
ptr3
ptr4
ptr5
adc0
adc1
adc2
adc3
adc4
IRF1
IRF2
IRF3
IRF4
IRF5
R4
R7
R8
R9
R10
47
out1
out2
out3
out4
out5
C3 Cap 100nF
BATERY1
SW1
vDRIVER
v+ lipo
C4
Bluetooth1
RX
TX
R11 Res1 10k
R12 Res1 10k
ADC_LIPO
CONN1
color
e1
Header 2
U3 LM7805
U4 LM7805
In
Out
C6 C Pol
C5 Cap 10nF
LED1
LED2
LED3
LED4
LED5
LED6
LED7
R13 Res3 330
R14 Res3 330
R15 Res3 330
R16 Res3 330
R17 Res3 330
R18 Res3 330
R19 Res3 560
motor1
AO1
AO2
BO1
BO2
*3
TB66
VM(3-13V)
3-5V
A01
A02
B02
B01
STBY
BIN1
BIN2
AIN1
AIN2
PWMA
PWMB
led1
led2
led3
led4
led5
Title Minisumo ULTRON
Size A Text
Number Versión 1.1
Revision
Date: 5/7/2016
Sheet of Club de Robótica EPN
File: C:\Users\..\ESQUEMATICO.SchDoc
Drawn By: Vargas Suasnavas Jonathan