RAUCK BUILT LLC
(Phone # Removed for Privacy)
Contact@JRauckhorst.com

STATEMENT OF WORK

Foundation Repair & Concrete Flatwork

Address Removed for Confidentiality

1. Project Overview

Prepared By	Jonathan Rauckhorst
Company	Rauck Built LLC
Property Owner	Rauck Built LLC
Property Address	Address Removed for Confidentiality
Owner Phone	Phone Number Removed for Confidentiality
Owner Email	Contact@JRauckhorst.com
Contractor / Vendor	Foundation Repair Company
Contractor Primary Contact	Name Removed for Confidentiality
Contractor Address	Address Removed for Confidentiality
Contractor Phone	Phone Number Removed for Confidentiality
Foundation Repair Start Date	January 5, 2026
Concrete Flatwork Start Date	January 12, 2026
Permit Responsibility	To be confirmed prior to work commencing
Warranty	Lifetime Foundation Warranty, transferable to one future owner

1.1 Project Summary

This Statement of Work has been prepared by Rauck Built LLC for the renovation work at the above-referenced property, which is owned by Rauck Built LLC. It serves as the governing document for all work performed under this engagement and must be reviewed and agreed upon by all parties prior to work commencing. The scope has been developed based on a site evaluation, contractor estimates, and Rauck Built LLC's renovation objectives for the property; with all work to be delivered on schedule, within budget, and compliant with applicable codes outlined in Section 3. Foundation Repair FRC will assign a dedicated project manager to oversee day-to-day field operations, coordinate crew scheduling, and serve as the primary on-site point of contact. Any changes to scope, cost, or schedule must be agreed upon in writing by Rauck Built LLC and FRC before work proceeds.

2. Scope of Work

2.1 Foundation Repair — Perimeter & Interior Pier Installation

- Perform perimeter pier point excavation at 24 locations with full landscape preservation and restoration to prior condition.
- Press 6500psi concrete cylinder piles to load-bearing strata at all 24 pier points using hydraulic press equipment; no impact or driven installation permitted.
- Install high-density pier caps and steel span beams at all pier locations as required by load analysis.
- Backfill all excavation points and restore landscape to prior condition upon completion.
- Conduct a final computerized level survey upon completion of all pier installations to verify elevation correction prior to project closeout.
- Issue lifetime foundation warranty upon final sign-off.

2.2 Concrete Perforation & Tunnel Excavation

- Perform concrete perforation and re-surface work at 5 designated points; locations to be confirmed on site with project manager prior to drilling.
- Conduct tunnel excavation at 9 designated points to access pier locations beneath the patio surface, preserving the patio surface above.

2.3 Concrete Flatwork — Replacement & New Pour

- Demolish and remove existing concrete across approximately 216 square feet of designated flatwork area, including all earthwork and drainage provisions.
- Install perimeter formwork across approximately 106 linear feet.
- Install rebar dowel pins at approximately 24" on center across the contiguous surface to control heaving.
- Install #3 (3/8") rebar tied at 12" on center, center-seated, across the full 216sf area.
- Pour and finish 4" 3000psi concrete across the full flatwork area; surface finish to be confirmed with owner prior to pour.
- Remove and replace concrete at two patio locations approximately 8' x 10' each, per client request.
- All debris and waste generated during demolition and flatwork to be removed from the property; debris removal is included in scope.

2.4 Site Cleanup & Restoration

- All debris, excavation spoils, and waste material to be removed from the property upon completion of each phase.
- All landscaping, driveways, and surfaces disturbed during pier excavation to be restored to prior condition before project closeout.
- Final site to be left clean, accessible, and free of construction materials.

2.5 Pier Location Diagram

- Refer to Figure 1 below for all 24 pier placement locations — 22 perimeter and 2 interior.
- Black squares indicate pier installation points. Blue shading indicates the primary repair zone.
- Red dashed areas indicate concrete removal and replacement zones per client direction.
- Coordinate with FRC project manager before drilling to confirm each pier point.

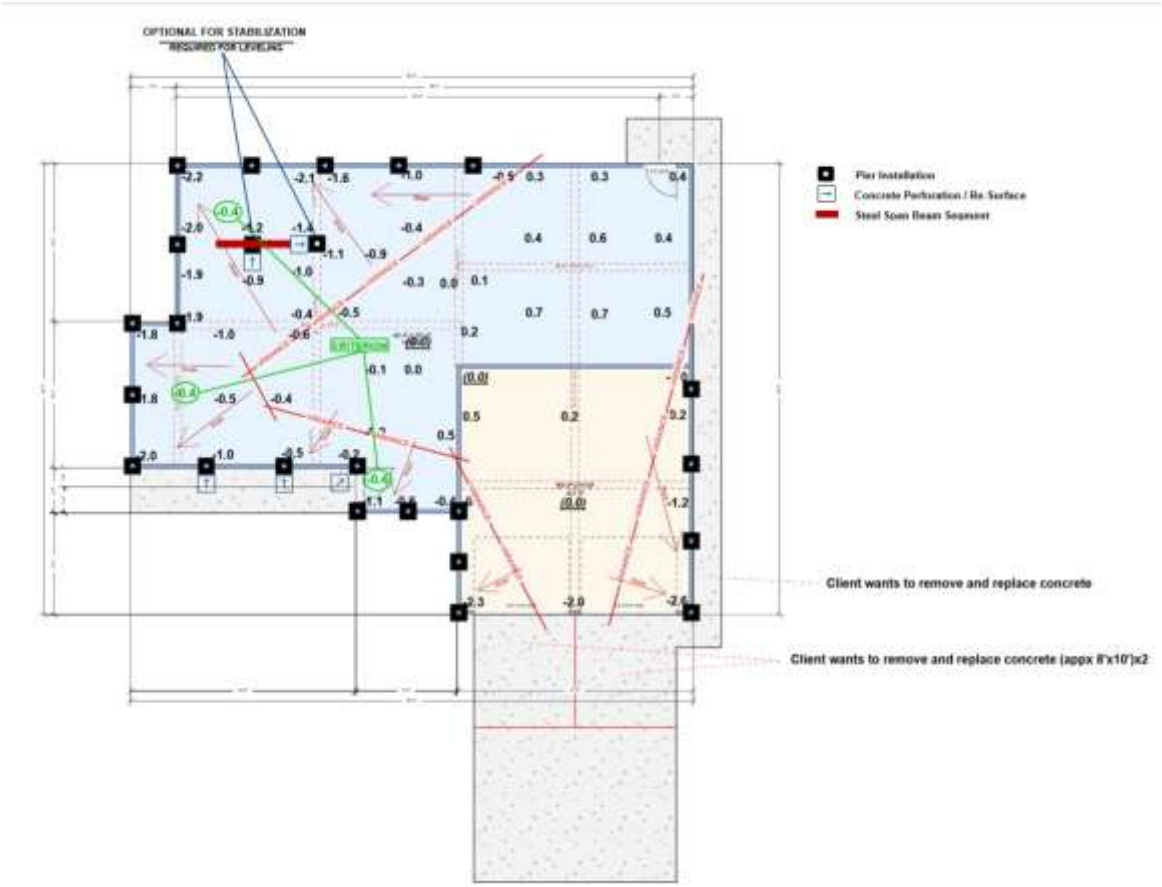

Figure 1: Pier Location Diagram — Address Removed for Confidentiality | Foundation Repair Company

3. Technical Specifications

3.1 Foundation Condition Assessment

Foundation Type	Contiguous non-post-tension slab-on-grade
Condition Status	Advancing
Elevation Variance	2.9" overall — not within 15 feet, with heaving present
Workmanship Variance	Approximately 0.2" original workmanship variance
Tolerance Threshold	Less than 0.6" (tolerance + workmanship variance combined)
Structural Calculation	L/360 deflection criteria observed
Load Analysis	Load vs. soil composition charted, non-specific

3.2 Pier System — 6x12 Pressed Concrete Pier

- Pile cylinder: 6" diameter x 1'-0" long solid concrete cylinders; minimum 6500psi compressive strength.
- Pile cap: 8" x 8" x 1'-4" solid concrete pile cap per Sheet D1.
- Shim system: High-density steel metal shims at grade beam contact point.
- Span beam: Steel span beam segments installed as required per load analysis.
- Installation method: Hydraulic press only; no impact or driven installation.
- Pier count: 22 perimeter + 2 interior = 24 total.
- Pressure and depth to be recorded at each pier point during installation.

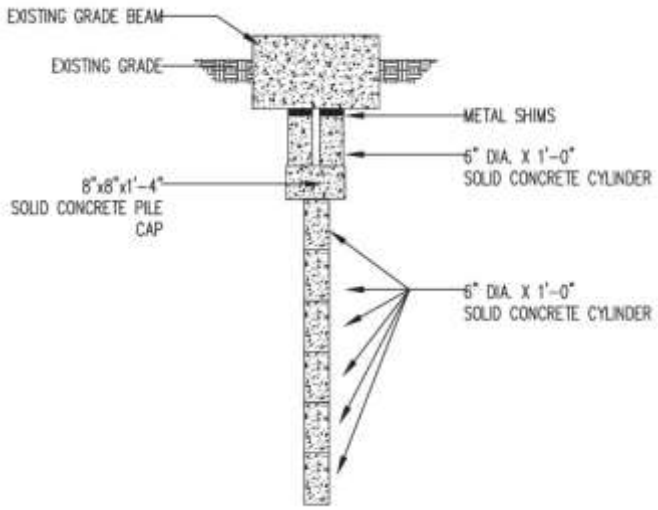

Figure 2: Foundation Repair Company 6x12 Pier Construction Detail — Pile Cap, Cylinders, Metal Shims & Grade Beam Connection

3.3 Concrete Flatwork Specifications

- Concrete mix: 3000psi minimum compressive strength.
- Slab thickness: 4" nominal depth.
- Reinforcement: #3 (3/8") rebar at 12" on center, center-seated.
- Heave control: Rebar dowel pins at approximately 24" on center.
- Finish: Customer choice; confirm with owner before pour.
- Concrete re-surface dimensions: 20'-4" L x 8" W x 1'-0" D; 20'-6" L x 8" W x 1'-0" D; 25'-0" L x 8" W x 1'-0" D.

3.4 Code Compliance & Standards

- ASCE 7 - Minimum Design Loads for Buildings and Other Structures.
- L/360 deflection criteria observed for all structural calculations.
- Standard backfill and compaction per industry practice.

- All work to comply with applicable local, state, and federal codes in effect at time of construction.

4. Permit Responsibility

Building Permit	Foundation Repair Company is responsible for determining, obtaining, and coordinating all required building permits prior to work commencing.
Inspections	Foundation Repair Company is responsible for scheduling all required inspections and ensuring work is accessible at each phase.
Permit Fees	Permit fees are not included in the contractor's estimate. Responsibility for permit fees to be confirmed in writing prior to project start.

- No work requiring a permit may begin until the applicable permit has been issued and posted on site.
- Foundation Repair Company to provide copies of all issued permits to Rauck Built LLC prior to mobilization.
- Any permit-related delays must be communicated to Rauck Built LLC within 24 hours of becoming known.

5. Insurance & Liability

5.1 Contractor Insurance Requirements

- Foundation Repair Company must carry General Liability insurance with a minimum limit of $1,000,000 per occurrence prior to beginning any work at the property.
- Foundation Repair Company must carry Workers' Compensation insurance covering all employees and subcontractors on site.
- Rauck Built LLC must be named as an additional insured on FRC General Liability policy for the duration of this project.
- Certificates of insurance must be provided to Rauck Built LLC before work commences and must remain current and uninterrupted for the full duration of the project.

5.2 Liability Limitations

- Foundation Repair Company is solely responsible for the means, methods, and safety of all work performed under this SOW.
- Rauck Built LLC is not liable for any injury, damage, or loss resulting from FRC’s operations on site.
- Any damage to the property or adjacent properties caused by FRC or its subcontractors must be repaired at FRC’s expense and without delay.
- Rauck Built LLC reserves the right to withhold payment pending resolution of any unresolved damage claims.

6. Scheduling & Communication

6.1 Project Schedule

Foundation Repair Start Date	January 5, 2026
Concrete Flatwork Start Date	January 12, 2026
Estimated Completion Date	To be confirmed upon project start
Sequencing Requirement	Foundation pier installation must be complete and verified before flatwork begins

- Foundation pier installation must be fully completed and verified by final level survey before any concrete flatwork begins.
- Concrete perforation and tunnel excavation to be coordinated with pier installation sequencing; confirm schedule with FRC PM before mobilizing flatwork crew.
- Final walkthrough and punch list to be scheduled within 5 business days of substantial completion notice.

6.2 Communication Protocol

- FRC project manager (Mitchell) to provide daily status updates to Rauck Built LLC for the duration of active work on site.
- Primary point of contact - Rauck Built LLC: Jonathan Rauckhorst at Contact@JRauckhorst.com.
- Primary point of contact - FRC: Primary Contact: Phone Number Removed for Confidentiality.
- All formal communications, approvals, scope clarifications, and change requests must be made in writing via email.
- Any site conditions that deviate from the approved scope or pier location diagram must be reported to Rauck Built LLC within 24 hours of discovery before work in that area proceeds.

7. Photo Documentation

- FRC is required to provide photographic documentation at the following stages: before any work begins, after all excavation is complete, at each pier installation point showing depth and pressure readings, after backfill and landscape restoration, and at final completion.
- Photos must be time-stamped and submitted to Rauck Built LLC within 48 hours of each stage being completed.
- Photos of each pier installation must clearly show the pier point number (per the location diagram), depth achieved, and any deviation from the approved scope.
- The concrete flatwork phase must be documented before demolition, after rebar installation, and after the final pour and finish.

- Final photo set must be submitted as part of the project closeout package. No final payment will be released without receipt of the complete photo documentation.

8. Change Order Process

Any work outside the scope defined in this SOW, or any deviation from the agreed specifications, requires a written change order before that work may proceed. Verbal approvals are not valid and will not be honored for payment purposes.

8.1 Change Order Requirements

- All change orders must be submitted in writing and include: a description of the change, the reason for the change, the cost impact (increase or decrease), and any schedule impact.
- Change orders must be signed by both Rauck Built LLC and FRC before changed work begins.
- FRC may not commence any work outside the approved scope until a signed change order is in hand.
- Rauck Built LLC reserves the right to obtain competing quotes for any change order exceeding $500.

8.2 Unauthorized Work

- Any work performed without a signed change order will not be compensated and may be subject to removal at FRC's expense.
- Rauck Built LLC is not responsible for costs incurred by FRC for unauthorized work, regardless of whether the work was deemed necessary by FRC in the field.

9. Project Closeout & Punch List

9.1 Substantial Completion

- The project is considered substantially complete when all scope items in Section 2 have been completed in accordance with Section 3, the final computerized level survey has been conducted and results provided to Rauck Built LLC, and all permits have passed final inspection.
- FRC must notify Rauck Built LLC in writing when substantial completion has been reached and request a final walkthrough within 5 business days.

9.2 Punch List Process

- Any deficiencies identified during the final walkthrough will be documented in a punch list prepared by Rauck Built LLC and provided to FRC within 3 business days of the walkthrough.
- FRC must complete all punch list items within 10 business days of receipt.
- A second walkthrough will be scheduled to confirm all punch list items have been resolved before closeout is finalized.

- Final payment will not be released until the punch list is cleared, the complete photo documentation package has been submitted, and all warranty documentation has been provided.

9.3 Final Deliverables

- Signed and completed FRC Lifetime Foundation Warranty certificate.
- Full photo documentation package per Section 7.
- Copies of all permits and inspection sign-offs.
- Final computerized level survey results showing post-repair elevation readings.
- Any product data sheets or spec sheets for installed materials.

10. Exclusions & Limitations

- Permitting fees — responsibility for permit costs to be confirmed in writing prior to project start per Section 4.
- Interior cosmetic repairs resulting from foundation movement or repair work — including drywall cracks, flooring, doors, trim, and cabinetry.
- Plumbing leak detection or repair of any kind.
- Drainage system installation beyond what is included in the flatwork scope.
- Structural repairs above grade.
- Hazardous material abatement (including asbestos, lead paint, or mold) - unless separately identified and quoted.
- Landscaping beyond the direct restoration of areas disturbed during pier excavation.
- Work on any foundation areas not identified in the approved pier location diagram in Section 2.5.
- Movement outside the underpinned area (including interior slab settlement or upheaval in non-underpinned zones) is not covered by the pier installation scope or the associated lifetime warranty.

Any work required beyond the scope defined in this document is subject to a written change order per Section 8, approved and signed by both parties before work proceeds.

11. Warranty

11.1 Workmanship Warranty

Warranty Period	Lifetime
Issuer	Foundation Repair Company
Coverage	All underpinned areas — re-raise at no additional cost to owner if settling occurs
Transferability	Transferable to one future homeowner — Address Removed for Confidentiality

Conditions	No major structural changes to the home may be made post-repair

- Should any adjustment be required during the life of the home due to settling, FRC will re-raise all previously underpinned areas without cost to the owner.
- Warranty documentation to be issued and signed by a FRC officer at project closeout.
- Warranty does not cover upheaval, movement outside underpinned areas, or damage caused by plumbing leaks, drainage issues, or acts of nature occurring after project completion.

12. Acceptance & Signatures

By signing below, all parties confirm they have read, understood, and agreed to the full scope, specifications, schedule, and terms described in this Statement of Work. Any modifications after signing require a written, signed change order per Section 8.

Property Owner / Rauck Built LLC

Jonathan Rauckhorst, Rauck Built LLC
Date: _____

Contractor

Foundation Repair Company (FRC) — Authorized Representative
Date: _____

Rauck Built LLC | Address Removed for Confidentiality | Foundation Repair & Concrete Flatwork | March 2026