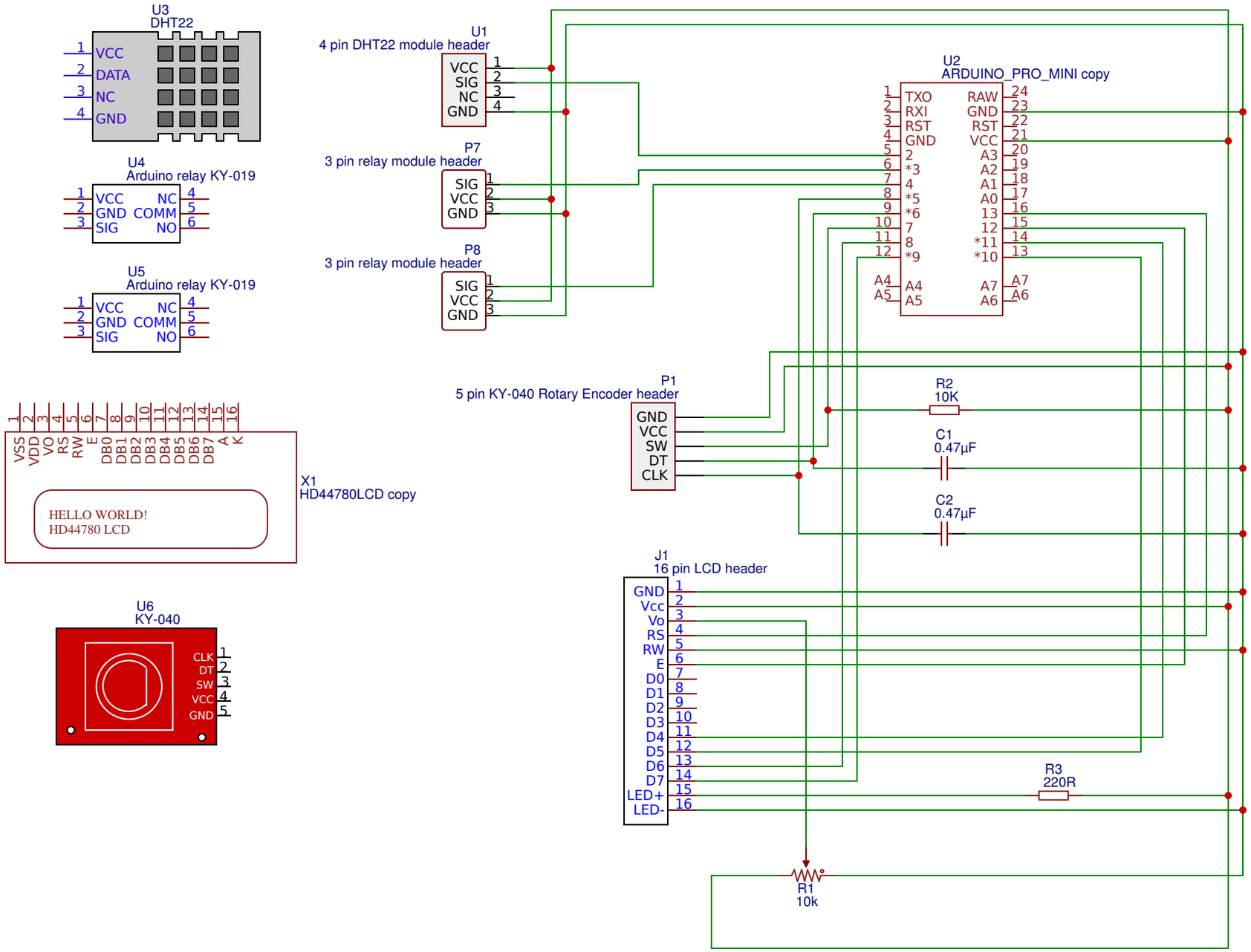

TITLE: ardBeeQueen	REV: 1.0
Date: 2019-02-25	Sheet: 1/1
EasyEDA V5.8.20	Drawn By: jonsag