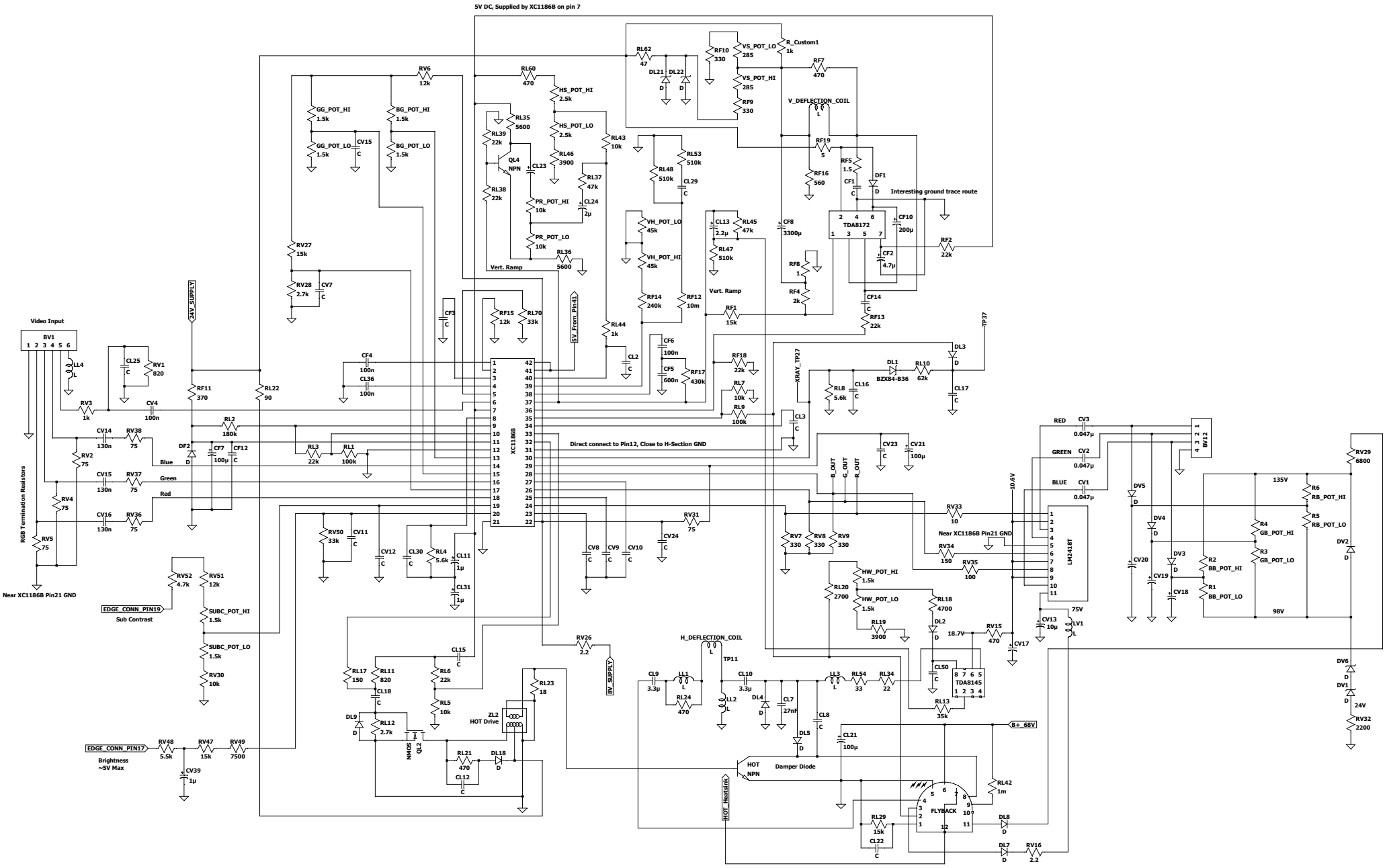

--- C:\Users\jcs4x\Documents\Color Classic\Video Section\video_section_schem1.asc ---