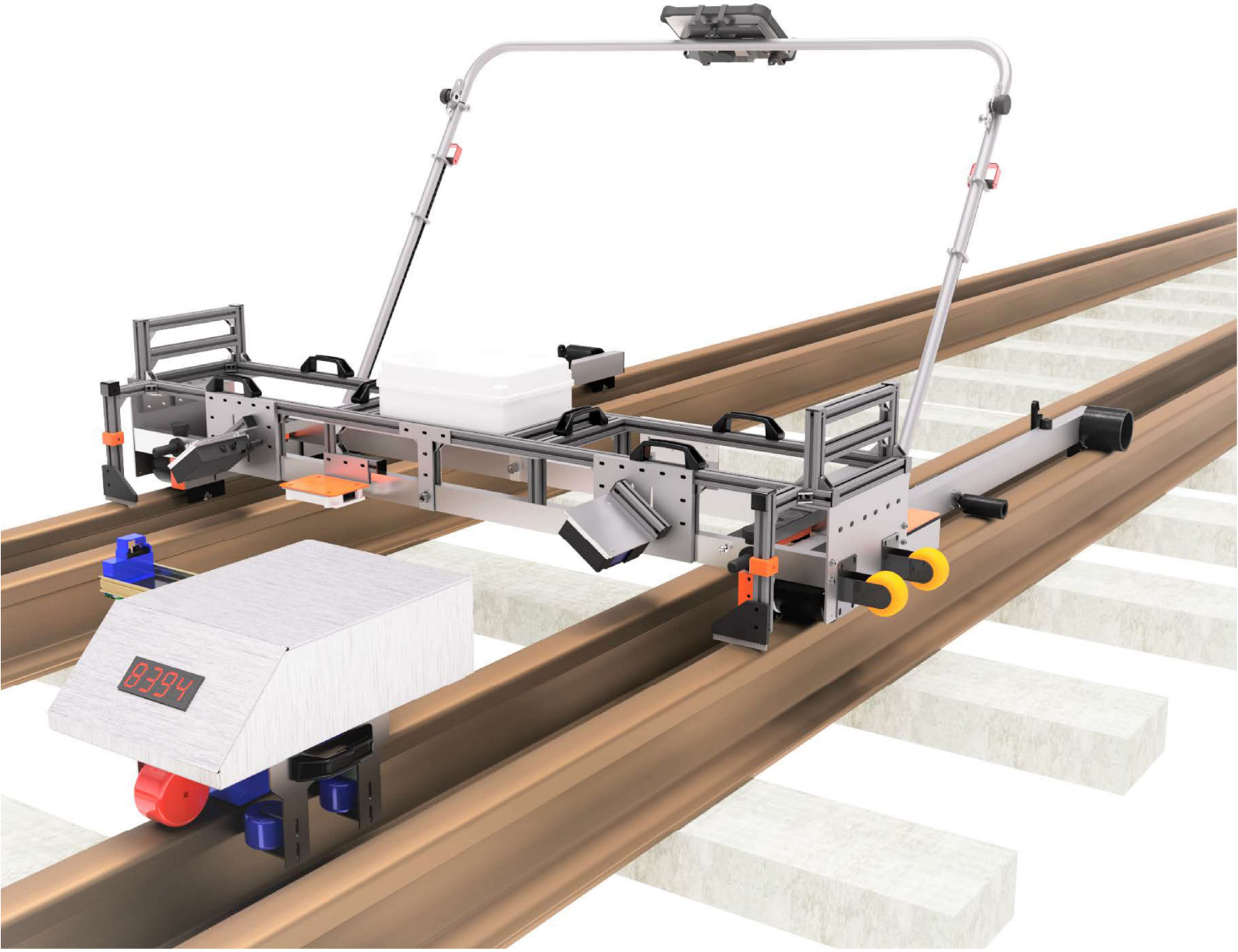

RAILORDS

RAIL MAINTENANCE OPTIMIZATION

AN INTEGRATION OF SYSTEMS AND SENSORS

REVIEW 4 FINAL REPORT (S08)

Project Mentors:

Tang Ling Ken (SMRT)
Nagarajan Raghavan (SUTD)
Zhang Yue (SUTD)

Project Members:

Chin Joo Ern (EPD)
Lam Teng Foong (EPD)
Nicholas Ng (EPD)
Toh Wei Qi (EPD)
Eric Teo (ISTD)
Kevin Tan (ISTD)

Project done in collaboration with:

SINGAPORE UNIVERSITY OF TECHNOLOGY AND DESIGN

SMRT

(i) Table of Contents

(i) Table of Contents

(ii) Glossary of Terms

(iii) Executive Summary

1 Introduction 1

1.1 Background 1

1.2 SMRT's Requests 3

2 Problem Analysis 4

2.1 Stakeholder Analysis 4

2.2 Market Research 7

2.2.1 Track Geometry Measurement Trolley Alternatives 8

2.2.2 Mapping Techniques 12

2.3 Case Study Analysis 13

2.3.1 Costly Operations 13

2.3.2 Subpar Technology of Measurement Systems 14

2.3.3 Yamanote Line Success 15

3 Problem scoping 17

3.1 Prioritized Needs 17

3.2 Constraints 18

3.3 Problem Statement 18

4 Concept Generation and Evaluation 20

4.1 Morphological Chart 20

4.2 Qualitatively Analyzed Morphological Chart 21

4.3 Synergy Groups 22

4.4 Pugh Chart 24

4.4.1 Grading Rubrics 25

4.4.2 Re-Iterative Design Process 25

5 Chosen Concept 27
5.1 Track Mapping System: Tri-Modal Mapping System 27
5.2 Graw Trolley Substitute: ORCA – Upgraded Abtus Trolley 28
5.3 Defect Re-Identifier: ORCA Mini 30
6 Prototype Development (ORCA and ORCA Mini) 31
6.1 Structural and Mechanical Development 31
6.1.1 Computer Aided Design (CAD) Sensor Positioning 31
6.1.2 Structural Analysis 32
6.1.3 Small-Scale Prototyping 32
6.1.4 Sizing of Components 34
6.1.5 Prototype Fabrication 36
6.1.6 Usability Testing 37
6.1.7 Obstacles and Subcomponent Testing 38
6.2 Power System Development 41
6.2.1 Circuit Layout 41
6.2.2 Safety Features and Circuit Protection 43
6.2.3 Battery Selection 44
6.2.4 Electronics Testing 47
6.3 Sensor Integration 48
6.3.1 Sensor Selection 48
6.3.2 Sensor Interfacing 49
6.4 2D Rail Profile Alignment Algorithm 56
6.4.1 2D Laser Scanner Interfacing 56
6.4.2 Rail Alignment Algorithm Design Process 58
6.4.3 Calculation of Rail Wear Using Chosen Algorithm 58
6.4.4 Verification and Testing of Chosen Algorithm 62
6.5 Network Architecture 64
6.5.1 Architecture Framework 64

6.5.2 Network Design (ORCA) 64
6.5.3 Network Design (ORCA Mini) 65
6.6 Software Implementation 66
6.6.1 ORCA User Interface Development 66
6.6.2 ORCA Mini User Interface 72
6.6.3 Database Design 72
6.7 Failure Mode Effects Analysis 73
6.8 Contingency Plans 74
7 Final Integrated Testing 75
7.1 Orca Mini Final Testing 75
7.2 Orca Final Testing 76
7.2.1 Repeatability Test (Bishan Depot Training Track) 76
7.2.2 Endurance and Operational Readiness Test (Tanah Merah – Expo Track Segment) 77
8 Project Documentation 80
9 Project Management 81
9.1 Task Allocation 81
9.2 Administrative Risks 81
9.3 Project Schedule 82
9.4 Project Budget 82
10 Conclusion 83
11 References 85
12 Appendix 87
Annex 1 Key Takeaways from Unstructured Interviews 87
Annex 2 Structured Interview Meeting Minutes 89
Annex 3 Evaluation of Existing Mapping Techniques 96
Annex 4 Further Case Study: Complex Logistics 98
Annex 5 Comprehensive List of Needs 99

Annex 6 Details of Constraints 104
Annex 7 Raw Morphological Chart 107
Annex 8 Softcopy Morphological Chart 108
Annex 9 Qualitatively Analyzed Morphological Chart 109
Annex 10 All Concept Sketches 111
Annex 11 Pugh Charts 147
Annex 12 Static Stress Analysis 150
12.1 Static Stress Analysis Performed on ORCA's Side Plate Bolts 150
12.2 Methodology 150
Annex 13 Small Scale Prototype 152
12.1.1 Conclusion 153
Annex 14 Sizing of ORCA Mini Springs and Wheel Motor Hub 155
14.1 Sizing of Springs 155
14.2 Sizing of Motor 159
14.3 Results Analysis 161
Annex 15 Usability Testing Design Changes 163
Annex 16 Heat sink sizing 165
Annex 17 Circuit Protection 166
Annex 18 Battery Sizing Test Results 168
Annex 19 Rotary Encoder Troubleshooting 169
Annex 20 Sensor Selection Considerations 171
Annex 21 RFID Interfacing and Experimentation 173
21.1 Reading the Received Signal Strength 173
21.2 RFID Reader Coverage 174
21.3 Effects of Environment Factors 174
21.4 Metal-mount vs. Plastic-mount tag 175
21.5 Reader-Tag Orientation 175
Annex 22 Testing of the IMU Sensor 176

22.1 Testing distance tracking using a low-cost IMU 176
22.2 Testing distance tracking using an industrial grade IMU 176
22.3 Problem faced: IMU not responding to requests 177
22.4 Potential Issues 178
Annex 23 Pugh Chart of 2D Rail Profile Alignment Methods 179
Annex 24 Circular Intersection Algorithm 180
Annex 25 Reference profile alignment results 181
Annex 26 A/B Testing Analysis Example 184
26.1 Example results: 184
Annex 27 UI A/B Testing 185
Annex 28 Re-iterations and Improvements 186
Annex 29 Technical Requirements 190
Annex 30 Test Plans 191
Annex 31 FMEA 194
Annex 32 Gantt Chart 196
Annex 33 Administrative Risks 202
Annex 34 2D laser scanner exposure time experiment 203
Annex 35 Performance of ORCA against GRAW 209
Annex 36 ORCA Circuit Schematics 212
Annex 37 ORCA Data Flow Diagram (Refer to softcopy) 215
Annex 38 ORCA Laser Rail Profile Trolley Maintenance Manual 216
Annex 39 ORCA Laser Rail Profile Trolley Operation Manual 238
Annex 40 ORCA Mini Technical Documentation 258
Annex 41 Orca Structural Construction Plans 276
Annex 42 Capstone Bill of Materials 312

Glossary of Key Terms

Abtus Trolley – *a trolley designed by Abtus Limited which is capable of measuring track geometry*

Arduino – *an open-source electronics platform or board which is easily programmable*

Chainge – the measure of distance along the railway tracks in meters

Condition Based Monitoring – *a maintenance strategy in which the actual condition of an asset is constantly monitored to determine if maintenance should be executed*

Corrective Maintenance – *is a maintenance task performed to identify, isolate and rectify a fault so that the failed asset or system can be restored to an operational condition within the condition tolerances*

Cron script – *customizable scripts in Linux operating systems that are executed periodically*

Encoders – *a device, that converts a rotational movement into a digital signal which can be interpreted as distance travelled*

Engineering Hours – *the number of hours available for rail maintenance, the default being 3.5 hours but may vary according to SMRT's rail maintenance policies*

Gantt Chart – *a chart which illustrates the start and finish dates of the terminal elements and summary elements of a project*

GRAW Trolley – *a trolley designed by GRAW which is capable of measuring track geometry and rail head wear*

Inertial Measurement Unit (IMU) – *an electronic device that measures and reports a body's specific force, and angular rate*

Init script – *customizable scripts in Linux operating systems that will be executed on startup of the system.*

Mapping data – *the act of matching data points to a position along the track*

Nightwork Operations – *nightly engineering operations during the engineering hours during which rail maintenance is executed*

North-South and East-West Line – *First two Mass Rapid Transit lines operated in Singapore*

Permanent Way – *the track on a railway or railroad, consisting of the rails, fasteners, railroad ties, ballast and underlying subgrade*

Preventive Maintenance – *is a maintenance that is regularly performed on a piece of equipment to lessen the likelihood of it failing*

Rail Head Wear – *wear measurements of the rail head top, diagonals and sides*

Raspberry Pi – *a basic computer that is programmable*

RFID Reader – *a radio-frequency identification device which uses electromagnetic fields to automatically identify and track tags attached to objects*

RFID Tag – *a tag which is detected by an RFID Reader*

Safety Factor – *the ratio of the strength of a system to its expected load, a safety factor larger than 1 indicates that the component is safe for operation*

Schedule Based Monitoring – *a maintenance strategy in which the conditions of an asset are monitored at a scheduled interval to determine if maintenance should be executed*

Singapore Mass Rapid Transit – *the leading multi-modal public transport operator in Singapore*

Sleepers – *also known as a railway sleeper, it is a rectangular support for rails in railroad tracks*

Track Geometry – *the three-dimensional geometry of track layouts and associated measurements used in design, construction and maintenance of railway tracks*

Track Geometry Measurement Trolley (TGMT) – *a trolley which measures track geometry and records results of track condition visual inspections*

UI/UX – *user interface and user experience with respect to a series of screens, pages and visual elements that a user uses to interact with a device*

2D Rail Profile – *the cross-section profile of the working railhead surface*

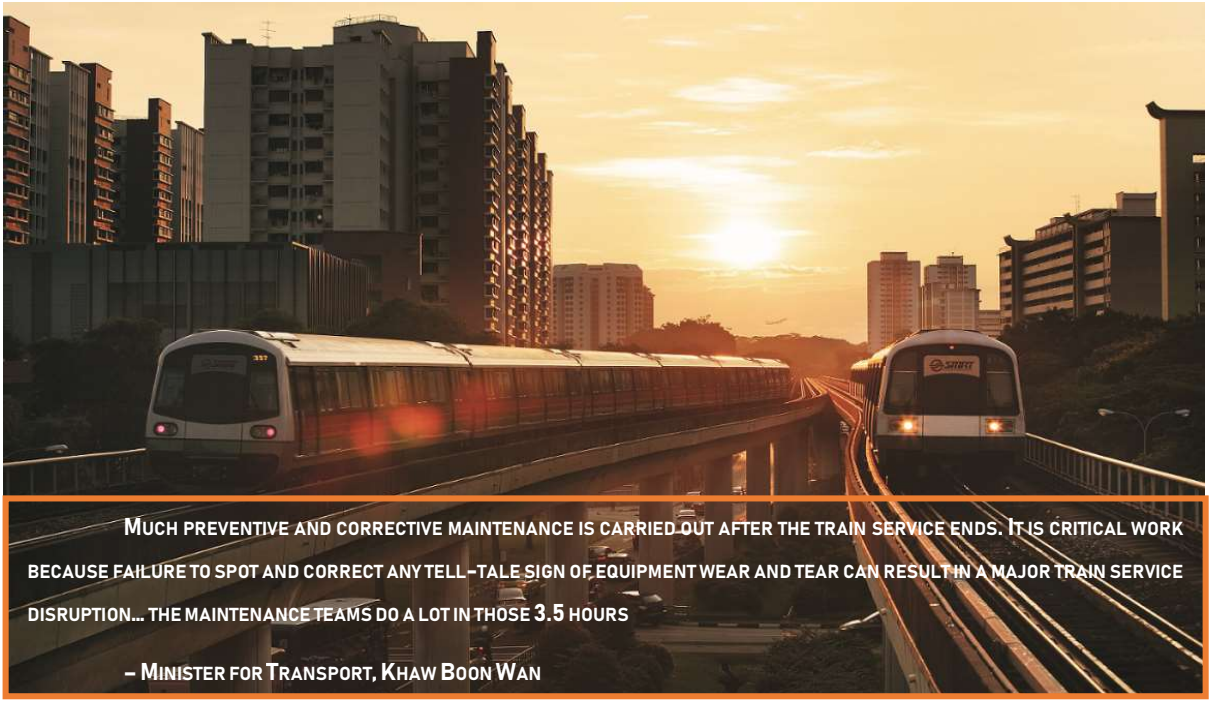

RAIL TRANSPORTATION is an important part of Singapore's transportation network and has long served the purpose of providing affordable, efficient and comfortable mobility for our residents and visitors. While there are many different maintenance systems that enable rail transportation to function smoothly in Singapore from train repairs, signal testing to software upgrades, the maintenance of the railway tracks remains one of the critical works that ensure the smooth operations of trains. According to the Ministry of Transport, the entire network of tracks spanning more than 200 kilometers is monitored every 4 – 7 days to ensure that the railway is safe for passenger service.

In order to support this effort, RAILORDS has worked closely together with SMRT to develop its in-house Track Geometry Measurement Trolley capabilities for improved rail maintenance, safety and reliability of its tracks. The 3 key systems introduced to support SMRT's rail maintenance are:

1. A Tri-Modal Mapping System which will increase the mapping precision of the data being collected on the railway tracks

2. ORCA – a track geometry and rail head wear measurement trolley which will monitor the conditions of the rails and highlight defective segments

3. ORCA Mini – an autonomous robot capable of identifying the position of a defect within a 0.7 metre margin

Through 6 months of development and testing, the RAILORDS have deployed over 10 sensors including 2D laser scanners, radio frequency identification readers and inclinometers on the ORCA and ORCA Mini. Operations using these three systems were conducted on actual track environments and the results have been documented in this report.

1 Introduction

Rail maintenance is critical in the operation of train services. Improperly maintained rails lead to delays in train services and even accidents such as train derailments (Lela, 2018). In Singapore, the need for rail maintenance has only been increasing. The purpose of this report is to present the development of a rail monitoring device and mapping system which aims to improve the rail maintenance situation in Singapore through:

1. Stakeholder studies
2. Market research
3. Case studies
4. Morphological chart with qualitative analysis
5. Pugh charts analyses
6. *Development* strategies for the chosen concepts
7. Construction and documentation of the device
8. Evaluation of the device's design

1.1 Background

Singapore Mass Rapid Transit (SMRT) Trains Limited has been the largest rail operator in Singapore since 1987. Currently, it owns over 200km of rail network and serves over 3.1 million commuters daily ("SMRT Annual Report 2016", 2016). However, increased service delays have resulted in decreased customer satisfaction for the first time in four years ("Commuter satisfaction in public transport dips," 2017), (See **Figure 1**). In 2017 alone, there were 16 delays that exceeded 30 minutes ("Performance of Rail," 2018). This was on top of numerous other delays that were neither officially recorded ("SMRT Rail Report,", 2017) nor announced (Lim, 2017).

FIGURE 1. STATISTICS SHOWING THE DIP IN PUBLIC TRANSPORT SATISFACTION FROM 96% IN 2016 TO 91.8% IN 2017.

SMRT's investigations have shown that the recent spike in rail disruptions are chiefly due to aging railway assets due for replacement. Transport Minister Khaw Boon Wan has highlighted the importance of timely maintenance to 'spot and correct any tell-tale signs of equipment wear and tear'

("Maintenance is what keeps," 2015). However, several constraints that limit maintenance works on SMRT's rail network have been highlighted to us by SMRT's permanent way division:

- A strict **3.5-hour limit on engineering hours**[1] requires rail operators to prioritize only the most critical of works[2]
- SMRT only has a single GRAW trolley to measure rail head wear and track geometry (data used to generate maintenance works)
- **Rail maintenance is expensive**[3]
- **Rail maintenance devices lack proper system integration for the specific environment they operate in, resulting in poor data accuracy** (Yamur, 2016) (See *Section 2.2 Market Research* and *Section 2.3 Case Study Analysis* for further analysis)

Based on the above information, we identified several key needs corresponding to the constraints experienced by SMRT:

1. An efficient system for identifying faults
2. Multifunctional rail maintenance devices to maximize usage of limited engineering hours
3. Additional track monitoring capabilities which can support the current resources
4. A cost effective and sustainable method for the execution of rail maintenance works
5. A custom solution which can accurately map the data collected to its position on the railway network

1 SMRT's Permanent Way Rail Maintenance and Engineering Division informed us that rail maintenance hours for SMRT are from 1.00am – 4.30am. All personnel are to vacate the tracks once the hours are up as train services will commence shortly after.

2 Rail maintenance delays resulting from incomplete maintenance within engineering hours can be devastating. In 2017, there were 16 incidents of such delays based on SMRT's annual report. In 2018, a 4hour delay occurred on Feb 14. Retrieved from: http://www.straitstimes.com/singapore/transport/delays-on-north-south-line-from-ang-mo-kio-to-raffles-place-before-10am-on

3 The costs can be split into two key categories: (i) Capital costs in the form of rail maintenance devices – which are subject to niche market pricing, and (ii) Operational costs in the form of the manpower required for daily maintenance and the charges incurred for maintaining the rail maintenance devices themselves. European countries alone spend 15-25 billion EUR annually on maintenance and renewals for railway systems consisting of about 300,000km of track. Tomas Lidén (2015). Euro Working Group on Transportation, EWGT 2015, 14-16 July 2015, Delft, The Netherlands. Railway Infrastructure Maintenance - A Survey of Planning Problems and Conducted Research. Retrieved from: https://mafiadoc.com/railway-infrastructure-maintenance-a-survey-of-planning-diva_59a8d7631723ddb9c5111424.html
Additionally, SMRT spends approximately 50% of its rail revenue on rail maintenance related expenses. This amounts to up to 537 million SGD per year. SMRT has also highlighted that each GRAW trolley costs in excess of $100,000 SGD to purchase and up to $5,000 SGD annually to maintain. Singapore Government Ministry of Communications and Information Archives. (29 Oct 2015) Retrieved from: https://www.gov.sg/news/content/today-online-rail-maintenance-expenses-to-account-for-half-of-rail-revenue-smrt

1.2 SMRT's Requests

SMRT's upper management also made the following additional specific requests for this project based on the issues SMRT is currently facing:

1. The project should consider the development of rail profile measurement capabilities that surpass that of the existing GRAW trolley. The current GRAW trolley is unable to align rail profiles to reference rail profiles accurately, resulting in inaccurate rail head wear measurements as shown in **Figure 2**.
2. The solution developed from this project must minimally have the data collection functions of the GRAW trolley (track geometry and rail head wear).

Our team confirmed with SMRT that the requests may be understood as the following needs:

1. SMRT requires a solution with precise and relevant measurements.
2. SMRT would benefit from the simultaneous collection of more rail maintenance data.

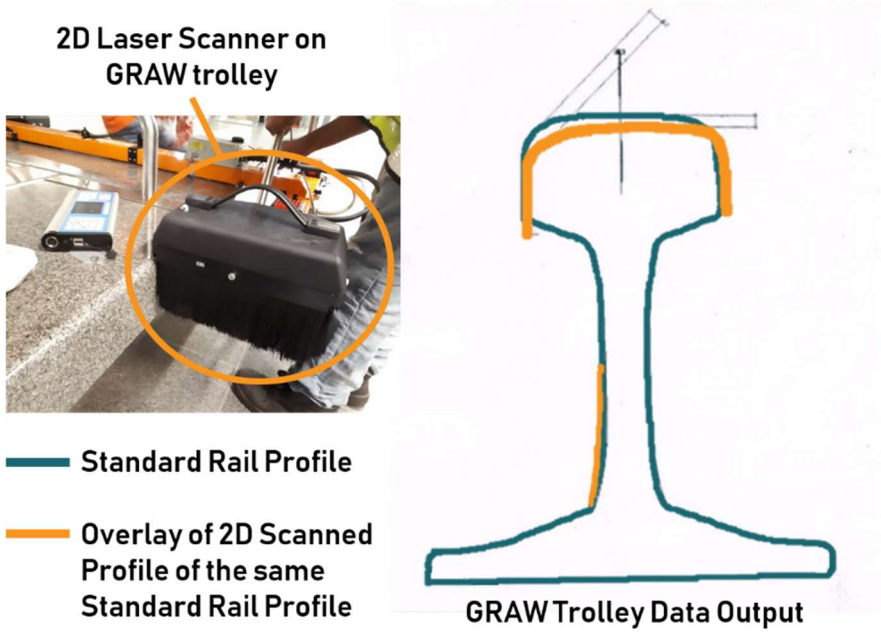

FIGURE 2. THE IMAGE ON THE LEFT SHOWS THE GRAW'S 2D LASER SCANNER, WHILE THE IMAGE ON THE RIGHT SHOWS THE DEGREE OF MISALIGNMENT BETWEEN THE SCANNED PROFILE OF A REFERENCE RAIL TO A DIGITAL TEMPLATE OF A REFERENCE RAIL.

2 Problem Analysis

Research conducted for this project was executed in multiple phases, with each phase covering a different source of information. The phases were split into an understanding of our stakeholders and their workflow (refer to *Section 2.1 Stakeholder Analysis*), an in-depth market research that looked at existing technologies related to the requirements of this project (refer to *Section 2.2 Market Research*) and a study of academic papers that highlights various case studies of rail maintenance (refer to *Section 2.3 Case Study Analysis*).

2.1 Stakeholder Analysis

Data collection from stakeholders for this project was conducted in two stages:

(i) unstructured interviews to collect general information, feedback from the different stakeholders (as seen in **Figure 3**), and

(ii) structured interviews with focused questions prepared beforehand to collect specific answers.

FIGURE 3. RAILORDS' NICHOLAS AND JOO ERN (IN ORANGE VESTS) ASSISTING IN THE CALIBRATION OF THE GRAW TROLLEY DURING ONE OF THE NIGHTWORKS.

The main takeaways from the interviews may be summarized as three key points:

1. The GRAW trolley is heavy and bulky, making it difficult to maneuver in tight environments
2. Feedback from the GRAW trolley to its users should include the status of sensors so that the user can troubleshoot the sensors if necessary
3. Encoders on the GRAW trolley are not reliable, as a result the data captured are often linked to the wrong position

Additional details from the interviews may be found in **Annex 1** and **Annex 2**.

Throughout the process, we also conducted field studies during attachments to nightwork operations. This enabled us to experience firsthand the specific problems faced by stakeholders, investigate possible answers to these identified problems, and determine if specific environment constraints could be overcome.

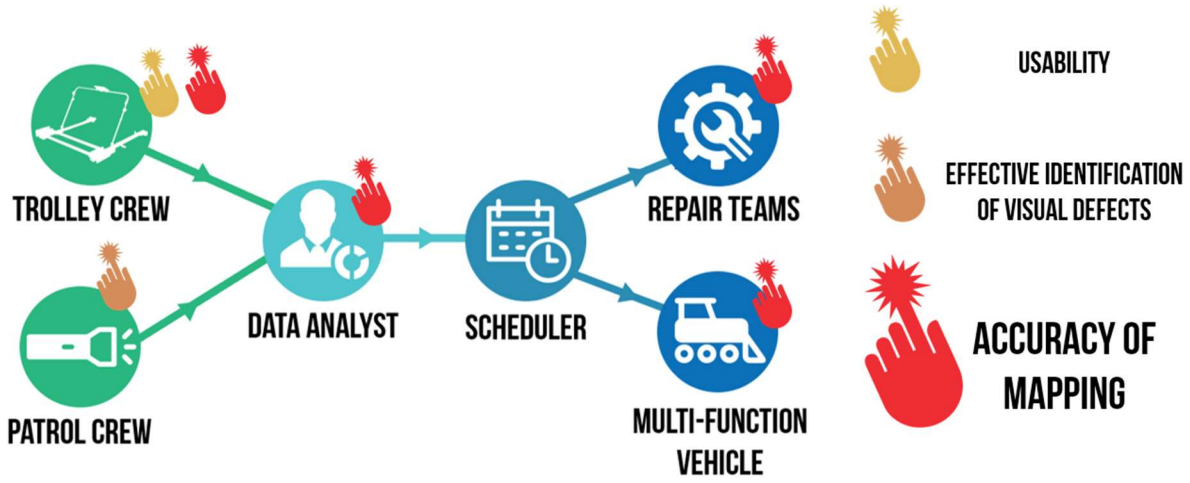

FIGURE 4. SMRT RAIL MAINTENANCE WORKFLOW.

From our analyses, we found three main areas for development previously shown in **Figure 4**:

- Accuracy of mapping of defects
- Identification of visual defects
- Usability of devices

This data was organized was subsequently summarized in a table (see **Table 1**).

Stakeholder	Problem(s) Highlighted	Identified Need(s)
Trolley Crew	- Trolley is heavy - Difficult to fit through entry points	Usability
	- Trolley's distance mapping capabilities unreliable	Accuracy of mapping
Patrol Crew	- Difficult to spot defects by eye under low lighting conditions	More effective identification of visual defects
Data Analyst	- GRAW trolley rail head wear data unreliable - GRAW trolley position identification inaccurate	Accuracy of mapping
Scheduler	- Difficult to de-conflict nightwork engineering with other divisions	N/A – difficulty is due to SMRT's internal scheduling practices
Repair Teams (Multi-function Vehicle)	- Measured rack geometry values do not match the GRAW trolley	Accuracy of mapping
Repair Teams (Nightwork Patrol Crew	- Distance markers located at random intervals - Different types of markers were used - Markers not located at standard position and difficult to read even with the assistance of light	Accuracy of mapping
SMRT's Upper Management	- Lack of real-time monitoring systems on trains and at critical locations	The solution can help SMRT's rail maintenance transition from Schedule-Based Maintenance to Condition-Based Maintenance
The Public	- Affected by the results of rail maintenance, but unable to control the process	N/A – Not a direct stakeholder for this project

TABLE 1. SUMMARY OF ALL PROBLEMS AND NEEDS HIGHLIGHTED BY STAKEHOLDERS

However, further analysis showed that identification of visual defects was currently being addressed in SMRT by RailVision, an existing rail maintenance solution that utilizes cameras mounted on trains to identify visual defects (as shown in **Figure 5**), and thus development of "Effective Identification of Visual Defects" was understood to be non-critical to SMRT and was removed from

FIGURE 5. RAILVISION IS A COMPUTER VISION BASED SYSTEM WHICH HIGHLIGHTS VISUALLY IDENTIFIED DEFECTS ON RAILS, A MAINTENANCE ENGINEER THEN ANALYZES THE IDENTIFIED DEFECTS AND SCHEDULES A REQUIRED MAINTENANCE WORK.

the scope of the project

2.2 Market Research

A study of research papers and documents posted by rail maintenance industry manufacturers allowed us to broadly categorize the different categories of solutions available in the market as seen in **Figure 6**. Based on SMRT's needs as currently detailed, it was clear that we should focus on the *Data Acquisition* field. From this starting point, we studied track geometry and trolley alternatives, rail maintenance data mapping techniques and case studies of rail maintenance regimes overseas.

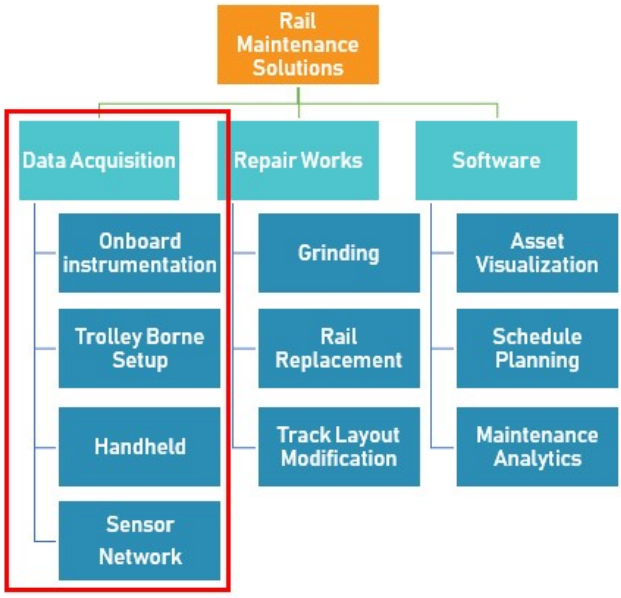

FIGURE 6. AN EXHAUSTIVE LIST DETAILING ALL FORMS OF MAINTENANCE SOLUTIONS IN THE RAIL MAINTENANCE INDUSTRY.

2.2.1 Track Geometry Measurement Trolley Alternatives

To understand the industry, we did a survey of rail maintenance devices available in the market. A comparison of the different types of solutions available in the market is shown in **Table 2**.

A feature comparison of the data acquisition method allowed us to conclude the trolley borne set-ups play an important role due to their versatility and low cost. Unlike onboard instrumentation or sensor networks, a trolley borne set-up may be deployed at any segment of the rail which requires monitoring. Furthermore, it collects a larger volume of data at a higher rate as compared to handheld devices.

	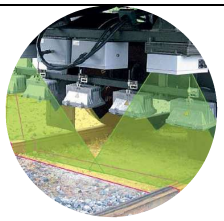			
Technology	**Onboard Instrumentation**	**Trolley Borne Setup**	**Handheld**	**Sensor Network**
Strengths	• High frequency of data collection • Large distance of rail can be measured quickly • No extra manpower needed	• Versatile • Good for surveying short track sections	• Portable • Suitable when rail traffic is heavy	• Very high frequency of data collection • No extra manpower needed
Weaknesses	• Readings are warped due to dynamic loading from the weight of moving train (SMRT Manager Fong) • Suspected defects ultimately need to be checked by a trolley under static loading	• Distance measured is limited to human fatigue • Frequency of measurement dependent on scheduling • Increased survey speed but reduced accuracy	• Slow rate of measurement	• Transmission cables prone to damage for wired sensors • Potentially high cost of installation

TABLE 2. GENERAL CATEGORIES OF THE TYPES OF SOLUTIONS AVAILABLE IN THE MARKET AND THEIR RELATIVE STRENGTHS AND WEAKNESSES.

Noting the importance of trolley-based solutions, we proceeded to conduct an in-depth research of trolley-based products available in the market. The results revealed two trends within the *Data Acquisition* solutions market which allowed the team to better understand SMRT's underlying considerations when they selected the GRAW trolley:

1. Most solutions focus on a single measurement function – except for the GRAW trolley which SMRT is currently using (seen in **Table 3**). This highlighted SMRT's considerations towards multifunctional solutions.
2. GRAW was the only company that manufactured platforms capable of collecting rail profile data together with track geometry data (**Table 4**). This was in line with SMRT's usage of a *Waiver of Competition*[4] during the acquirement of this asset. The uniqueness of this function explains SMRT's rationale when it purchased the GRAW trolley despite its **high cost** and the **limited number of components** required to achieve the function.

These trends highlighted the improvements which can be made to SMRT's rail maintenance system if the considerations SMRT made when purchasing the GRAW trolley are better addressed by our project.

[4] The GRAW trolley's lack of alternatives in the rail maintenance market allowed SMRT to acquire the asset using the Waiver of Competition condition. This also highlights SMRT's need for developing its own rail maintenance capabilities due to the unsatisfactory performance of the GRAW trolley.

Measurement	Track Geometry	Rail Profile	Third Rail Measurement	Asset Mapping	Rail Corrugation	Crack Detection
ABTUS (Trolley)						
GRAW (Trolley)		2D				
GRAW-SCORPION (Trolley)		3D				
ENSCO (Onboard Instrumentation)						
PLOWMAN CRAVEN (Aerial Drone)						
MERMEC (Onboard Instrumentation)						
GEISMAR-FILUS (Trolley)						

TABLE 3. PRODUCTS FROM COMPANIES THAT MANUFACTURED RAIL MAINTENANCE DEVICES WERE CONSOLIDATED BY THE TEAM, THE DATA COLLECTED HIGHLIGHTED GRAW'S SPECIALIZATION IN RAIL PROFILE MEASUREMENTS.

Track Geometry

Model	Distance	Track Gauge	Cant	Twist	Gradient	Vertical & Horizontal Versine	Flange Way	Rail Profile
GRAW								
ABTUS								
GEISMAR								
KVZ-KRAB								
AMBERG								

TABLE 4. MARKET RESEARCH OF ALL MAJOR PLAYERS IN THE RAIL MAINTENANCE INDUSTRY INDICATES THAT ONLY GRW MANUFACTURES DEVICES FOR RAIL PROFILE MEASUREMENT. THIS SUPPORTS SMRT'S FILING FOR A WAIVER OF COMPETITION.

2.2.2 Mapping Techniques

Since accurate mapping of data was highlighted by numerous stakeholders as a key need, we studied the different techniques used by the industry.

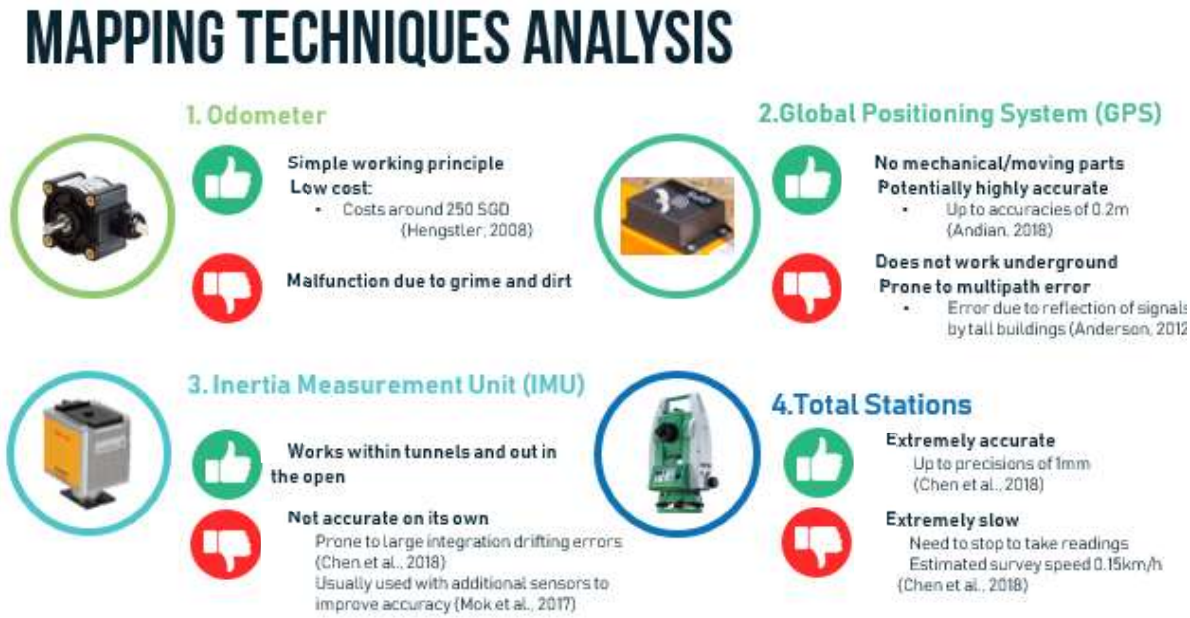

FIGURE 7. AN ANALYSIS OF MAPPING TECHNIQUES.

From the key results summarized in **Figure 7** (a more comprehensive table of all findings can be found in **Annex 3**), it was concluded that there was no existing optimum solution for SMRT in the market. Most trolleys depended on GPS as their key reference to pinpointing its exact location. However, GPS was not a suitable solution for SMRT because many segments of the SMRT rail are underground. In comparison, total stations provide accuracy down to the millimetre, however they are extremely expensive (Chen, 2018) and SMRT does not require such high precision; SMRT has a tolerance of around 0.7m[5]. Based on this analysis, it was apparent that encoders and IMUs stood out in terms of application versatility and had a high potential to be developed into a cost-effective mapping solution tailored to SMRT's required precision.

[5] Stated by SMRT Senior Engineer Ng Tie Xuan in a structured interview

2.3 Case Study Analysis

Our case study analyses focused on the Yamanote Line (Kazushi, 2016) and Sweden's rail maintenance regime (Waara, 2000), a broad study allowed us to summarize the challenges faced by the rail maintenance industry into four key categories:

1. Costly operations
2. Subpar technology of measurement systems
3. Complex logistics
4. Highly limited rail maintenance solutions

Given the scope of this project, Categories 1 and 2 bear much greater influence in the project and became the focus of the research. Discussions on Category 3 can be found in **Annex 4**, while Category 4 has been addressed in *Section 2.2, Market Research*.

2.3.1 Costly Operations

LICB Railway infrastructure items:	Ground area	Track and track bed	Engineering structures	Level crossings	Super-structure	Acces way	Safety, signalling	Lighting installations	Plant for transforming and carrying electric power for train haulage	Buildings
Short list Cost drivers			bridges, culverts, tunnels ...		including rails, sleepers, ballast, points, crossings	for passengers and goods including acces by road	and tele-communications installations	for traffic and safety purposes	sub-stations, supply cables between sub-stations and contact wires, catenaries	
1 Asset density										
Switch density	None	High	None	None	High	None	High	None	None	Out of scope
Other asset density	None	None	Medium	High	None	Medium	None	None	None	
2 Tracks per line	Low	High	Low	Low	High	None	High	Low	Medium	
3 Electrification of network	None	None	Low	None	None	None	None	None	High	
4 Gross tonnage	Low	High	High	Low	High	None	Low	None	Low	Out of scope
5 Speed	None	High	Medium	Low	Medium	None	None	None	High	
6 Track possession strategy										
Safety arrangements	Low	High	High	High	High	High	High	Low	High	Out of scope
Mean possession time	Low	High	High	High	High	None	High	Low	High	
Weekend & night work	Low	High	High	High	High	None	High	Medium	High	
Frequency	Low	High	High	Medium	High	None	High	Low	High	
4 Age of track	None	High	None	None	High	None	None	None	None	
8 Quality of service										
Punctuality	None	High	Low	Medium	High	None	High	None	High	Out of scope
Safety	None	High	High	High	High	None	High	None	High	

TABLE 5. TABLE SHOWING THE RELATIONSHIP BETWEEN THE MAGNITUDE OF COST DRIVERS (LEFT COLUMN) AND ITS EFFECTS ON SPECIFIC RAILWAY INFRASTRUCTURE ITEMS (TOP ROW)

Based on studies on railway maintenance costs (UIC, 2015), we found the following key types of cost drivers for rail maintenance as detailed in **Table 5**:

1. Asset density
2. Tracks per line
3. Electrification of network
4. Gross tonnage
5. Speed
6. Track possession[6] strategy
7. Age of track
8. Quality of service.

[6] Track possession is defined as the process of allocating a specific segment of track to a specific rail maintenance party to carry out rail maintenance activities.

Considering the nature of our project which sought to design a rail maintenance device to improve the SMRT's overall rail maintenance regime. Amongst these different types of cost drivers, we identified that the most suitable cost drivers to target were 2, 4, 5, 6 and 7, as these cost drivers were directly related to the volume and efficiency of the rail maintenance data collection.

Additionally, these cost drivers could be targeted as part of a preventive maintenance regime. This synergizes with the takeaways from our case studies: maintenance operations became much cheaper when preventive maintenance was performed instead of corrective maintenance. Sweden's rail network proved this by preemptively installing wayside lubricators to reduce wear and friction between the train wheels and railway tracks, slowing down the wear on both components (Waara, 2000). This action saved an estimated US$17 billion[7] (World Bank, 2016) with a cost of US$7.9 million.

Based on these findings, we concluded that our design of the system and device for rail maintenance will target cost-effectiveness through the flexibility of deployment across all lines that SMRT operates using a lightweight device that can react to changes to track possession immediately and collect data capable of supporting a preventive maintenance regime.

2.3.2 Subpar Technology of Measurement Systems

Current technologies for the measurement of parameters required for rail maintenance are inconsistent across different rail maintenance solution providers. There are problems with inaccurately measured data, missing data and incorrect location data that have resulted in increased and unnecessary maintenance tasks (Yamur, 2016). **Figure 8** shows detected mapping issues when comparing two measurements of the same location.

[7] This value was calculated based on Waara's estimation in Purchasing Power Parity dollars from: *"Wear reduction performance of rail flange lubrication*", by Waara. P. (2001). Division of Machine Elements, Department of Mechanical engineering, Lulea University of Technology, Lulea, Sweden. ISSN: 1402-1757;2000:60

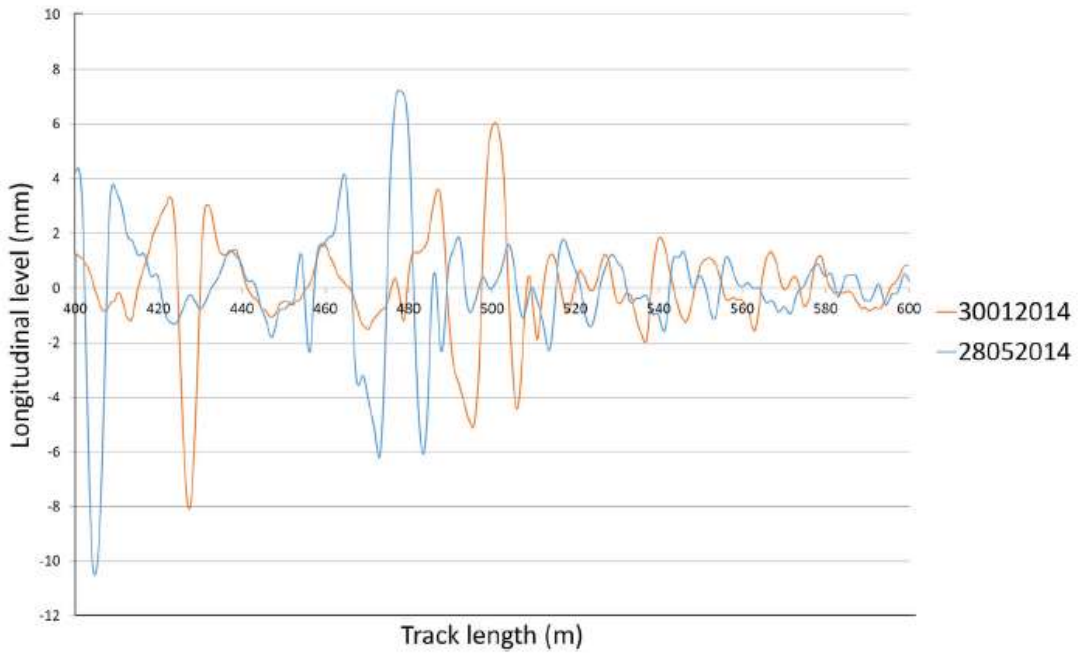

FIGURE 8. MEASUREMENT RESULTS OF THE SAME LOCATION 4 MONTHS APART SHOW A 20M OFFSET IN READINGS, INDICATING SIGNIFICANT MAPPING ERROR.

Based issues such as unreliable measurements, railway operators understood that regular inspections could possibly fail to find defects. Thus, they relied on costly and wasteful fixed replacement regime that replaces assets after a certain amount of time regardless of their state (Yokoyama, 2015).

2.3.3 Yamanote Line Success

However, Japan's Yamanote Line appears to have resolved these issues (Kazushi, 2016), despite using wireless strategies that lacked accuracy due to transmission noise. This was overcome by the strategy of obtaining as much data as possible to make decisions and track the records of those decisions, thus achieving a condition-based monitoring system. (Yun, 2011). Our study found that Yamanote Line adopted a condition-based maintenance (CBM) strategy (illustrated in **Figure 9**). Thus, we identified that SMRT's schedule-based maintenance (SBM) would benefit from a transition to CBM. **Figure 10** explains the difference between SBM and CBM.

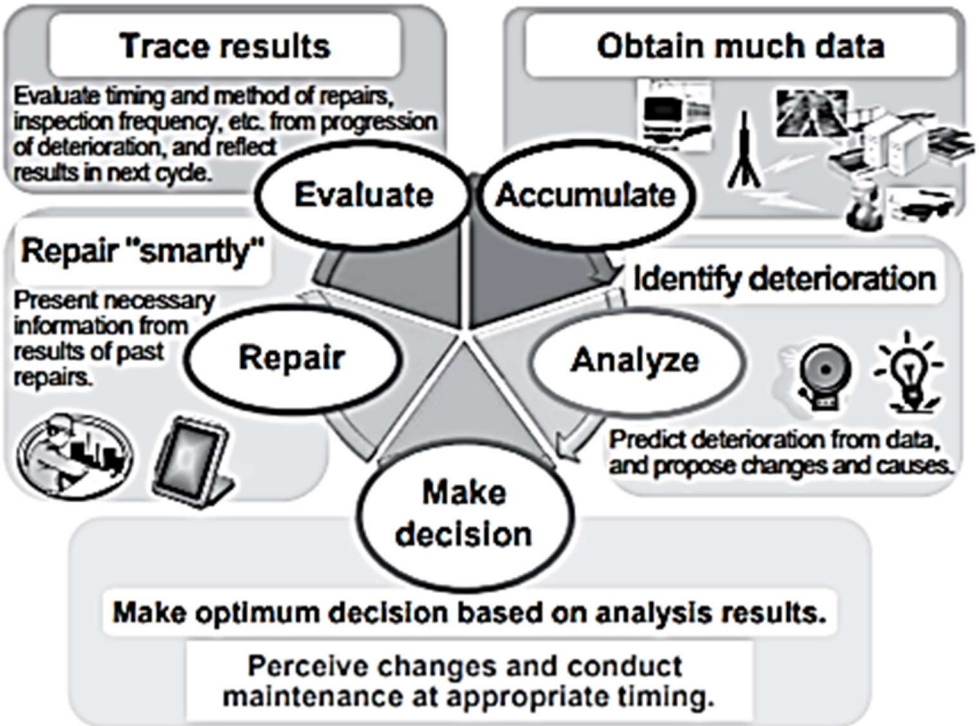

FIGURE 9. THE YAMANOTE LINE'S RAIL MAINTENANCE SYSTEM OVERVIEW.

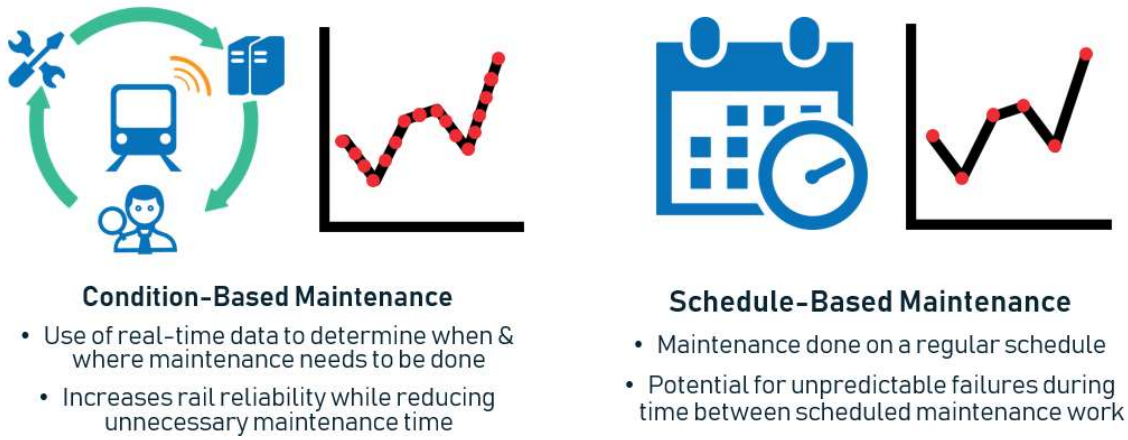

FIGURE 10. AN INFOGRAPHIC THAT COMPARES THE CBM AGAINST THE SBM. CBM HAS SEVERAL SYSTEM LEVEL BENEFITS THAT MAKE IT OBJECTIVELY BETTER THAN THE SBM.

3 Problem scoping

3.1 Prioritized Needs

The above research allowed us to identify a comprehensive list of sub-needs of each stakeholder and rank them from 0 to 3 stars (*) based on 4 criteria (comprehensive list in **Annex 5**):

- Contribution to effective maintenance
- Degree in which stakeholders are affected
- Severity of consequences faced if need is not met
- Novelty (whether the need have existing solutions)

These needs were then classified into seven primary needs as shown in **Table 6**.

Priority	Need	Source
1	The solution can accurately map the data collected to chainage	• Market research • Stakeholder analysis
2	The solution is cost-effective	• Market research • SMRT's requests
3	The solution provides precise and relevant measurements	• SMRT's requests
4	The solution can help SMRT's rail maintenance process transition from SBM to CBM	• Market research
5	The solution is sustainable	• SMRT's requests
6	The solution detects more track features	• Market research • SMRT's requests
7	The solution is easy to set up and use	• Stakeholder analysis

TABLE 6. SUMMARIZING NEEDS IDENTIFIED AND THEIR SOURCES

3.2 Constraints

Likewise, the constraints derived from our research and interactions with stakeholders were also categorized (further details can be found in **Annex 6)**. This led to the formation of nine categories as seen in **Figure 11**.

FIGURE 11. THE 9 CATEGORIES OF CONSTRAINTS IDENTIFIED BY THE TEAM. CONSTRAINTS ARE TYPICALLY HIGHLY SPECIFIC DETAILS THAT REQUIRE FOCUSED QUESTIONS TO BE DISCOVERED.

The breakdown of these constraints is given in **Table 7**.

Constraint Category	Constraint
Functionality & Performance	Type of track parameters measured
	Sensor precision
	Accurately and reliably map faults
	Operation Duration
Health & Safety	Risk to employees and hired external workers
Legal	Licensing
Ruggedness	Weather-proofing
	Shock survivability
Economic	Pricing of components
	Cost-effectiveness
Communication	Communication protocols
	RFID Frequency
Environment	Emissions
	Noise pollution
	Usage environment
Usability	Portability
	User Interface
	Data output
Prototyping & Testing	Limited access to test track
	Small database of track faults

TABLE 7. TABLE SUMMARIZING KEY CONSTRAINT CATEGORIES

3.3 Problem Statement

In light of the above, our understanding culminated in the form of a succinct problem statement which we believe will address SMRT's needs and constraints with regards to this project:

Railway tracks are critical assets of rail services, and SMRT monitors its tracks through track geometry and rail head wear. Yet, their capability to monitor these parameters are limited to a single

expensive GRAW Track Geometry Measuring Trolley (TGMT), procured at over SGD100,000. As such, monitoring frequency is low. Severe disruption of inspection schedules also occurs when the TGMT is sent overseas for its maintenance. In addition, results from field observations shows that the measurements collected are not correctly mapped to distance along the track, with errors accumulating at up to 30m per 1.5km. These makes the measurements unsuitable for analysis and faults identified are often not found at its flagged distance. Our team intends to design a **prototype track monitoring system** consisting of a cost-effective and rugged measurement device integrated into a **novel, scalable and accurate mapping system**. Our design aims to **increase the monitoring capabilities of SMRT at half the cost of a GRAW TGMT**, as well as to **reduce cumulative mapping error to a maximum of ±0.7m**. Our team also identified the need for our design to be safe, easy to use, and equipped with sensor precision (track geometry and 2D rail profile) that matches or surpasses commercial solutions."

With this problem statement in mind, we were ready to proceed to solution generation and evaluation.

4 Concept Generation and Evaluation

Generating solutions for our multi-tiered problem was exceptionally complex due to the way the problems were interwoven. We used a combination of (i) morphological chart which maximized our design space as it identified the functions we could use in our design, and (ii) a qualitatively analyzed morphological chart. The qualitatively analyzed morphological chart defines the functions in the space with specific feature labels and weighs their relative strengths and weaknesses. This process culminates in a series of Pugh charts which extracted synergistic features from the morphological chart as well as re-conceptualized the generated concepts that best addressed the needs and constraints identified.

4.1 Morphological Chart

We generated a morphological chart that exhaustively listed out functions and solutions that could be applied to the problem statement. This ensured that we started the concept generation with the largest design space possible based on our complete knowledge. The result of this endeavor was a comprehensive morphological chart containing 16 features and 86 solutions as shown in **Figure 12**. The full chart is found in **Annex 7**. To ensure the effective communication of all features related to each idea, a softcopy of the morphological chart was then generated, a sample of which is seen in **Figure 13** and the full version can be found in **Annex 8**.

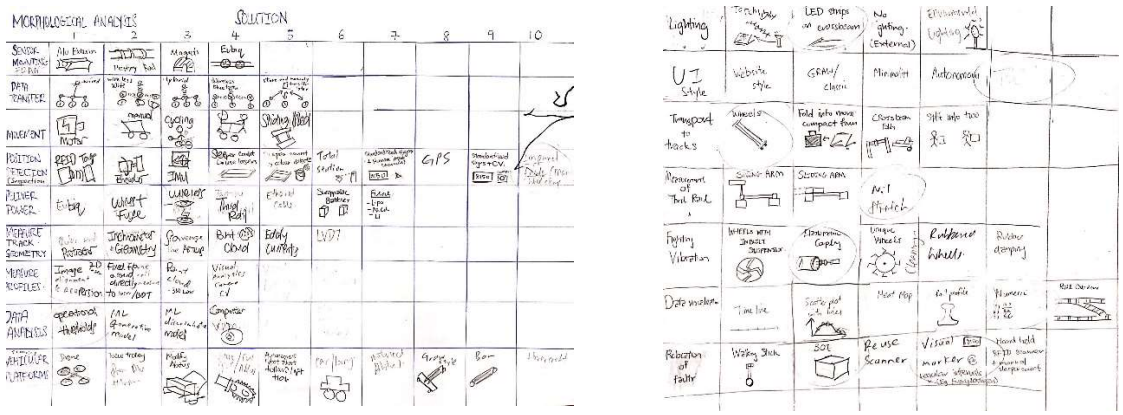

FIGURE 12. HAND DRAWN MORPHOLOGICAL CHART

MORPHOLOGICAL ANALYSIS	SOLUTIONS									
Features	1	2	3	4	5	6	7	8	9	10
Sensor Mounting Frame	Aluminium Extrusion	Picatinny Rail	Magnetic Mounts	Eubig						
Data Transfer	Wired	WiFi	Hybrid (Wired + Wireless)	Bluetooth	Manual Entry					
Movement	Motorized	Manual	Cycling Mechanism	Hand Car Mechanism	Sled					

FIGURE 13. THE FIRST THREE ROWS OF THE SOFTCOPY MORPHOLOGICAL CHART

4.2 Qualitatively Analyzed Morphological Chart

Using the softcopy version of the morphological chart, the characteristics and key aspects associated with each of the solutions were listed down. Each solution was given an overall positive or negative rating based on the listed characteristics using the grading scale in **Figure 14** below. This preliminary evaluation ensured that team members were aware of the strengths and weaknesses of each solution and this allowed them to make informed decisions in the subsequent steps of the design process (part of the results of such efforts are shown in **Figure 15**, while the full result of the labelling can be found in **Annex 9)**

FIGURE 14. GRADING SCALE OF QUANTITATIVE MORPHOLOGICAL CHART

Lighting				
	Mounted Torchlight	**LED Strips**	**No Lighting**	**Environmental Lighting**
	Fixed positions Directed beams Low-cost Low power consumption (+++)	General lighting Fixed onto frame Cannot be directed Low power consumption (+++)	Users are currently required to bring torchlights Status quo (O)	High-cost Current segments of track lit Requires existing power grid Alters rail infrastructure (+)

FIGURE 15. A SAMPLE ROW OF THE QUALITATIVELY ANALYZED MORPHOLOGICAL CHART

4.3 Synergy Groups

Utilizing the qualitatively analyzed morphological chart as a base, we identified three synergy groups which may be used to address the problem: (i) a track mapping system, (ii) a GRAW trolley replacement, and (iii) a defect re-identifier.

Every member was given one week to generate a target of ten concepts for these synergy groups, resulting in the generation of over 50 concepts, each addressing various parts of the problem. A variety of highlights from the collection of concept sketches are presented in **Figure 16** to **Figure 20**, while the full collection of concept sketches may be found in **Annex 10**.

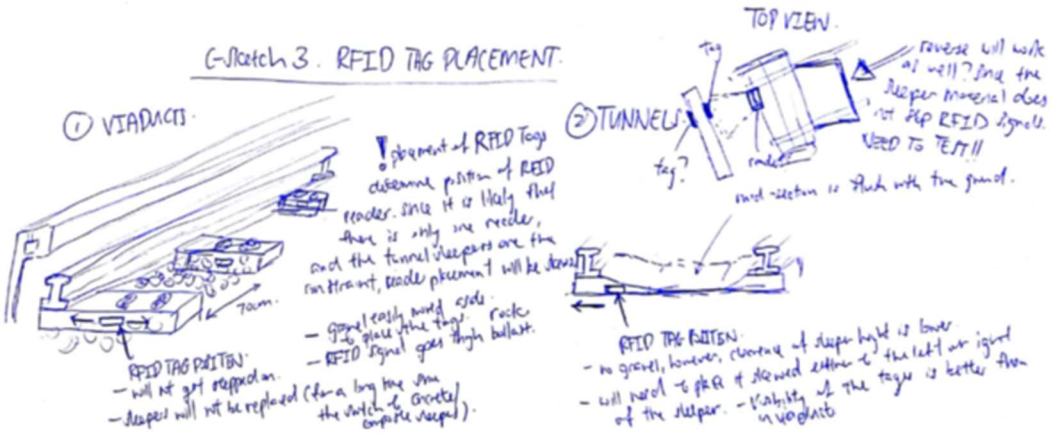

FIGURE 16. A CONCEPT SKETCH BY JOO ERN DETAILING THE RELATIVE POSITIONING OF THE RFID READER AND RFID TAG WITH REFERENCE TO THE RAIL INFRASTRUCTURE WHICH COULD BE USED AS PART OF THE MAPPING SYSTEM.

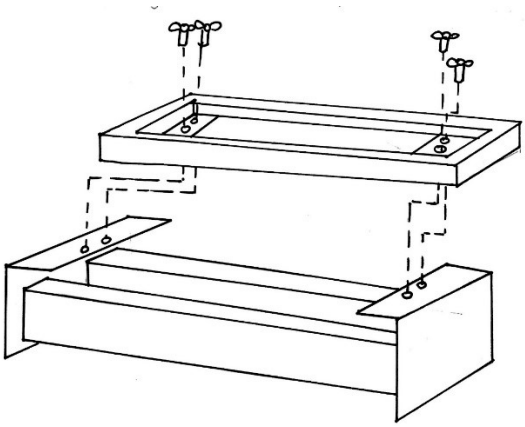

FIGURE 17. A CONCEPT SKETCH BY TENG FOONG ILLUSTRATING HOW ONE OF SMRT'S OLDER MODELS OF TRACK MEASUREMENT TROLLEYS CAN BE RETROFITTED WITH AN ADDITIONAL PROTOTYPING PLATFORM WHICH CAN BE INTEGRATED WITH AN ARRAY OF SENSORS.

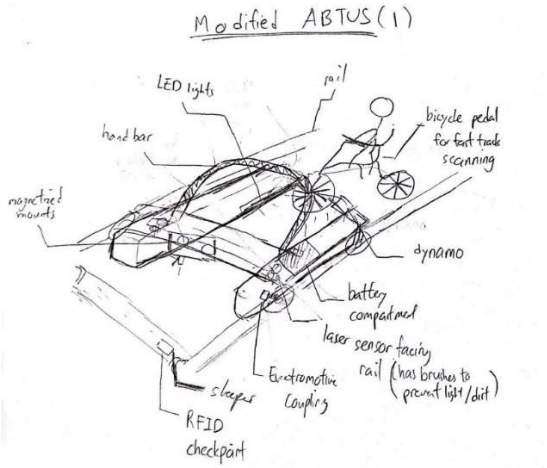

FIGURE 18. A COMPREHENSIVE SKETCH BY KEVIN DETAILING HOW A TROLLEY PLATFORM OUTFITTED WITH A BICYCLE-DRIVE MECHANISM, MAGNETIC MOUNTS FOR SENSORS, EQUIPPED WITH RFID READERS FOR POSITIONING AND LED LIGHTS ALONG THE PLATFORM FOR VISIBILITY MAY BE USED TO COLLECT MEANINGFUL DATA

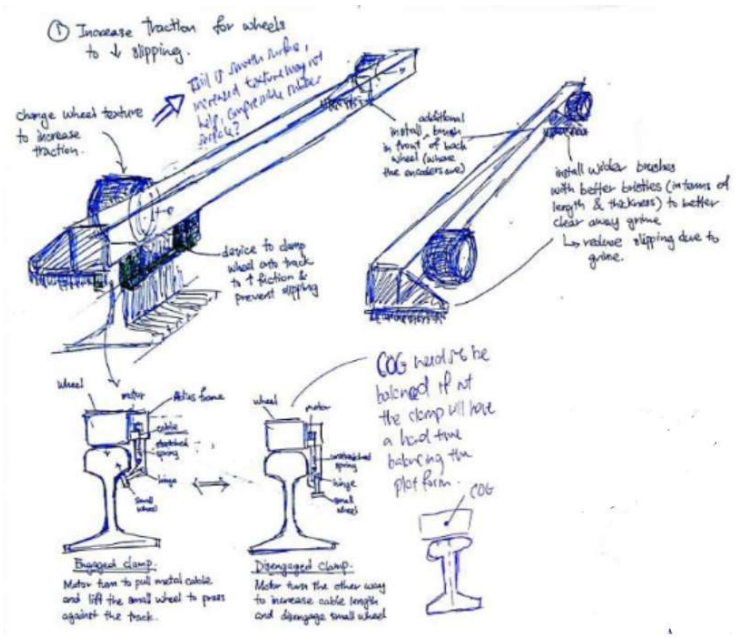

FIGURE 19. A DETAILED SKETCH BY WEI QI DETAILING THE POSSIBLE LATCHING MECHANISM WHICH CAN BE USED TO INCREASE THE TRACTION FOR VARIOUS TROLLEY BASED SOLUTIONS.

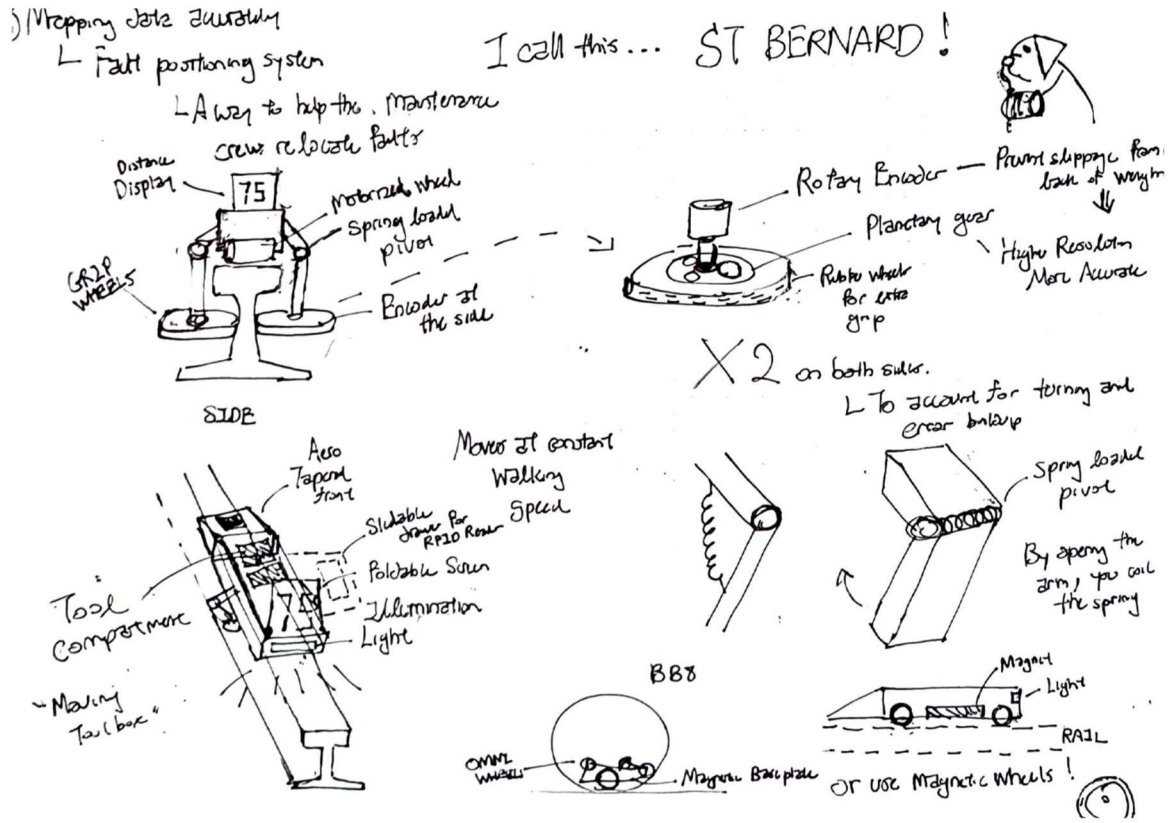

FIGURE 20. A CONCEPT SKETCH BY NICHOLAS EXPLAINING MECHANISMS THAT COULD IMPROVE THE ENCODER SOLUTION, SUCH AS MAGNETIC WHEELS AND SPRING-LOADED GRIPS, AND THE SUBSEQUENT IMPLEMENTATION.

4.4 Pugh Chart

Our concept evaluation was executed using a series of Pugh charts. The Pugh charts were created for (i) the GRAW trolley replacement – 10 concepts (as outlined in **Figure 21**), (ii) track mapping system – 8 concepts, (iii) the defect re-identifier – 10 concepts and (iv) 2D rail profile alignment algorithm – 6 concepts. These charts can be viewed in **Annex 11**, or *S08_Pugh_Charts.xls*.

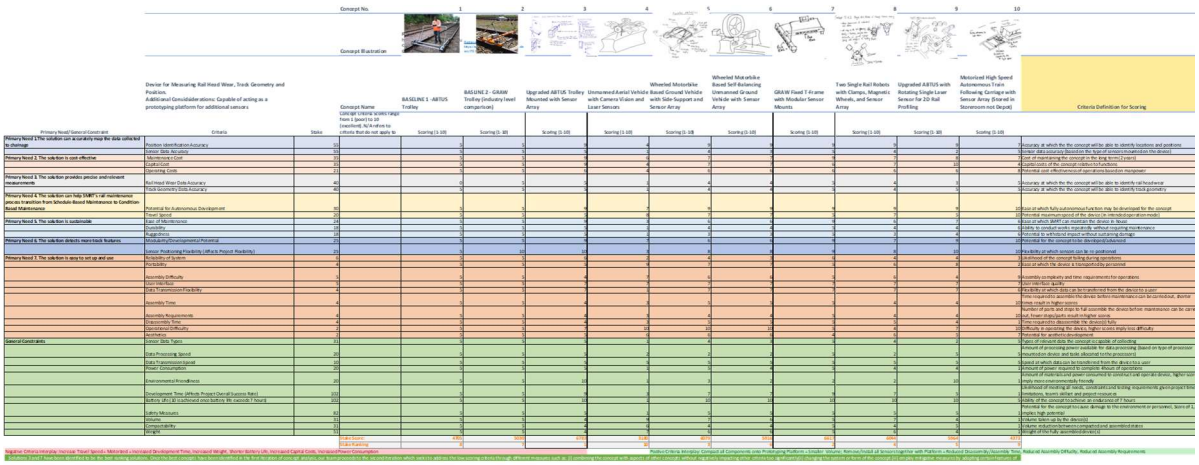

Concept No.			1	2	3	4	5	6	7	8	9	10	
Concept Illustration													
	Device for Measuring Rail Head Wear, Track Geometry and Position. Additional Consididerations: Capable of acting as a prototyping platform for additional sensors	Concept Name (Concept criteria scores range from 1 (poor) to 10 (excellent). N/A refers to criteria that do not apply to	BASELINE 1 - AIRTUS Trolley	BASELINE 2 - GRAW Trolley (industry level comparison)	Upgraded AIRTUS Trolley Mounted with Sensor Array	Unmanned Aerial Vehicle with Camera Vision and Laser Sensors	Wheeled Motorbike Based Ground Vehicle with Side-Support and Sensor Array	Wheeled Motorbike Based Self-Balancing Unmanned Ground Vehicle with Sensor Array	GRAW Fixed T-Frame with Modular Sensor Mounts	Two Single Rail Robots with Clamps, Magnetic Wheels, and Sensor Array	Upgraded AIRTUS with Rotating Single Laser Sensor for 2D Rail Profiling	Motorized High Speed Autonomous Train Following Carriage with Sensor Array (Stored in Storeroom not Depot)	Criteria Definition for Scoring
Primary Need/General Constraints	Criteria	Stakes	Scoring (1-10)	Scoring (1-10)	Scoring (1-10)	Scoring (1-10)	Scoring (1-10)	Scoring (1-10)	Scoring (1-10)	Scoring (1-10)	Scoring (1-10)	Scoring (1-10)	
Primary Need 1: The solution can accurately map the data collected to chainage	Position Identification Accuracy	10	5	5	5	5	4	4	5	5	5	5	1 Accuracy at which the the concept will be able to identify locations and positions
	Sensor Data Accuracy	10	5	5	5	4	4	5	5	5	5	5	2 Accuracy at which the concept will be able to measure the desired
Primary Need 2: The solution is cost effective	Maintenance Cost	10	5	5	5	4	4	5	5	5	5	4	3 Cost of maintaining the concept in the long terms (years)
	Capital Cost	10	5	5	5	4	4	5	5	5	5	10	4 Capital costs of the concept relative to functions
	Operating Costs	10	5	5	5	4	4	5	5	5	5	5	5 Potential cost effectiveness of operations based on manpower
Primary Need 3: The solution provides precise and relevant measurements	Rail Head Wear Data Accuracy	40	5	5	5	5	4	4	5	4	5	5	6 Accuracy at which the the concept will be able to identify rail headwear
	Track Geometry Data Accuracy	40	5	5	5	5	4	4	5	4	5	5	7 Accuracy at which the the concept will be able to identify track geometry
Primary Need 4: The solution can help DART's rail maintenance process transition from Schedule-Based Maintenance to Condition-Based Maintenance	Potential for Autonomous Development	30	5	5	5	7	5	7	5	5	5	5	8 Ease at which fully autonomous function may be developed for the concept
	Travel Speed	20	5	5	5	4	4	4	5	5	5	5	9 Potential maximum speed of the device in ideal operation mode
Primary Need 5: The solution is sustainable	Ease of Maintenance	24	5	5	5	4	4	4	5	4	5	7	10 Ease at which DART can maintain the device in house
	Durability	18	5	5	5	4	4	4	5	4	4	4	11 Ability to conduct works repeatedly without requiring maintenance
	Ruggedness	18	5	5	5	4	4	4	5	4	4	4	12 Potential to withstand impact without sustaining damage
Primary Need 6: The solution detects more track features	Modularity/Development Potential	25	5	5	5	7	5	7	5	7	5	5	13 Potential for the concept to be developed/upgraded
	Sensor Positioning Flexibility (Affects Project Flexibility)	25	5	10	10	7	5	7	5	5	5	10	14 Flexibility at which sensors can be re-positioned
Primary Need 7: The solution is easy to set up and use	Reliability of System	6	5	5	5	5	4	4	5	4	4	4	15 Likelihood of the concept failing during operations
	Portability	4	5	5	5	5	5	5	5	5	4	4	16 Ease at which the device is transportable/re-deployed
	Assembly Difficulty	5	5	5	5	5	5	5	5	5	5	4	17 Assembly complexity and time requirements for operations
	Start Up Time	5	5	5	5	5	5	5	5	5	5	5	18 Start Up Time apply
	Data Transmission Flexibility	4	5	5	5	5	5	5	5	5	5	5	19 Flexibility at which data can be transferred from the device to a user
	Assembly Time	4	5	5	5	4	3	3	5	4	4	4	20 Time required to assemble the device before maintenance can be conducted, shorter times result in higher scores
													Number of parts and steps in full assemble the device before maintenance can be conc
	Assembly Requirements	4	5	5	5	4	4	4	5	4	4	4	21 Cost, fewer steps/parts result in higher score
	Disassembly Time	4	5	5	5	4	3	3	5	5	4	4	Time required to disassemble the device(s) fully
	Operational Difficulty	2	5	5	5	10	10	10	5	5	4	7	22 Difficulty in operating the device, higher scores imply less difficulty
	Aesthetics	2	5	5	5	5	5	5	4	5	5	5	Potential for aesthetic development
General Constraints	Sensor Data Types	21	5	5	5	7	4	4	5	4	2	5	23 Types of relevant data the concept is capable of collecting
													Speed at which data can be processed by the device, dependent on type of processor
	Data Processing Speed	20	5	5	5	4	4	4	5	2	5	5	24 mounted on device and type allocated to the processing
	Data Transmission Speed	20	5	5	5	4	5	5	5	5	5	5	25 Speed at which data can be transferred from the device to a user
	Power Consumption	20	5	5	5	3	3	3	5	5	4	4	26 Amount of power required to complete 4hours of operations
													Amount of materials and power consumed to construct and operate device, higher sco
	Environmental Friendliness	20	5	5	5	3	3	3	5	2	5	10	27 imply more environmentally friendly
													Likelihood of meeting all needs, constraints and testing requirements given project tim
	Development Time (Affects Project Overall Success Rate)	100	5	5	5	4	3	2	5	4	5	5	28 Timelines, teams skillset and project resources
	Battery Life (8 is achieved once before 9h exceeds 7 hours)	102	5	5	5	10	2	10	10	10	10	10	29 Ability of the concept to achieve an endurance of 7 hours
													Potential for the concept to cause damage to the environment or personnel, based on p
	Safety Measures	82	5	5	5	4	5	5	5	5	5	5	30 Complex high potential
	Volume	51	5	5	5	4	4	4	5	4	4	4	31 Volume taken up by the device(s)
	Compatibility	51	5	5	5	4	4	4	5	4	5	5	32 Volume reduction between compacted and assembled states
	Weight	51	5	5	5	4	4	4	5	4	5	5	33 Weight of the fully assembled device(s)
			Total Score:	495	505	415	335	407	510	451	480	515	
			Scale Ranking:	4	3	7	10	8	1	6	5	2	

Negative Criteria Interdrop, Increase Travel Speeds, Motorized, Increased Development Time, Increased Weight, Shorter Battery Life, Increased Capital Costs, Increased Power Consumption — Positive Criteria Interdrop: Concept of Components onto Prototyping Platform + Smaller Volume, Remove Product of Sensors together with Platform + Reduced Discoverability/Assembly Time, Reduced Assembly Difficulty, Reduced Assembly Requirements

Solutions 2 and 7 have been identified to be the best scoring solutions. Once the best concepts have been identified in the first iteration of concept design, our team considered the design iteration which seeks to address the low scoring criteria through different measures such as: (i) combining the concept with aspects of other concepts without negatives impacting other criteria (ii) adding/removing components to improve the system in terms of the concept (iii) enabling engineering judgement of the concept (iv) adding supplementary or

FIGURE 21. OVERVIEW OF A PUGH CHART FOR THE GRAW TROLLEY REPLACEMENT

4.4.1 Grading Rubrics

For each synergy group, a list of criteria was generated. Each criterion was either based on sub-needs or constraints identified previously. Then, each concept was given a score of 0-10 for each criterion with the datum as the reference. This raw score was then multiplied with the weight points (WP) accorded to each specific criterion (based on importance) to produce a weighted score. Summing up all weighted scores gives the overall score of the evaluated concept.

Each concept was given a total of 1000 WP which was distributed in a process that is summarized in **Figure 22**. The rationale for such a complex methodology was to consider (i) all needs and constraints (ii) the prioritization of needs and (iii) the prioritization of the sub-needs within a need, ensuring that our concept evaluation was objective, systematic and backed up by strong evidence collected from extensive market research and stakeholder analysis.

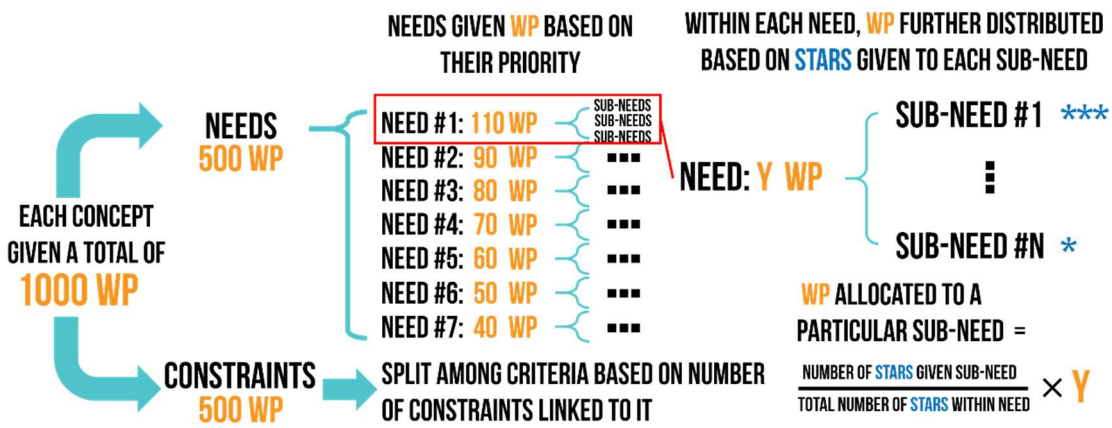

FIGURE 22. DIAGRAM THAT EXPLAINS HOW WEIGHT POINTS ARE DISTRIBUTED WITHIN A CONCEPT

4.4.2 Re-Iterative Design Process

Following the grading of the concepts, the concepts with the highest weighted scores are selected. The concepts were then put through a reiterative design process that improved the concepts by either combining them with the best features of other concepts, or by re-conceptualizing certain aspects to address its weaknesses with regard to a specific criteria. **Figure 23** and **Figure 24** illustrate these processes.

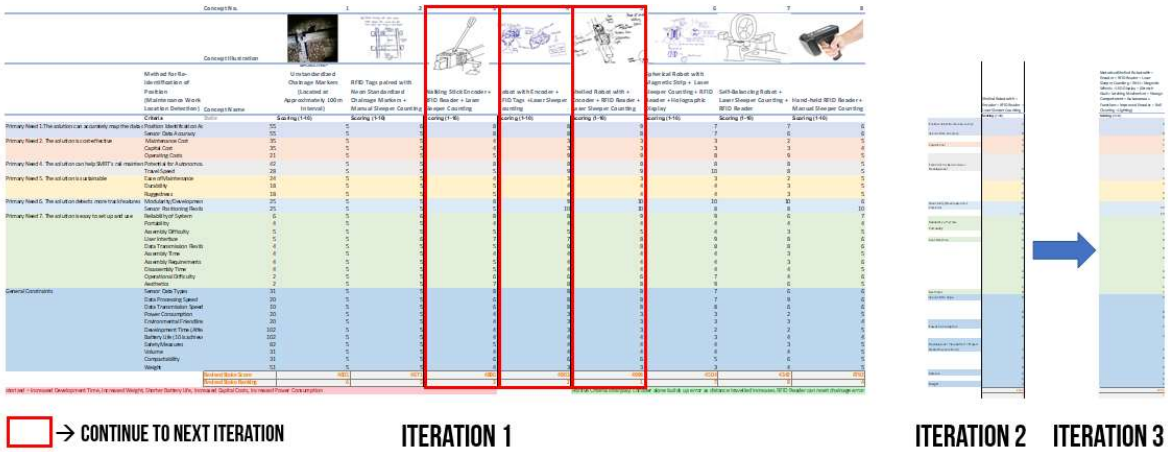

FIGURE 23. BEST CONCEPTS FOR THE DEFECT RE-IDENTIFIER SYNERGY GROUP, HIGHLIGHTED IN RED, ARE COMBINED INTO A SINGLE CONCEPT IN ITERATION 2, WITH BETTER SCORES THAN BEFORE. THIS ITERATION IS THEN FURTHER IMPROVED BY IDENTIFYING ITS WEAK POINTS AND RE-CONCEPTUALIZING THEM.

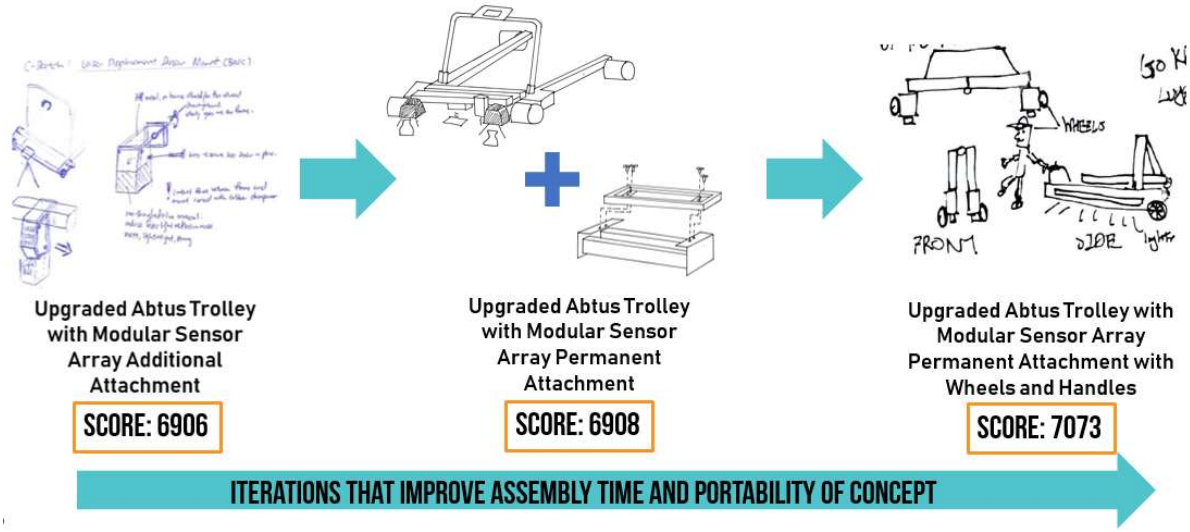

FIGURE 24. IN THIS FIGURE, THE RE-ITERATIVE DESIGN PROCESS IS CAPTURED BY THE EVOLUTION OF THE GRAW TROLLEY REPLACEMENT'S INITIAL CONCEPTS.

5 Chosen Concept

After the entire design process has developed to a satisfactory state, we were able to select highly feasible re-iterated concepts from the Pugh charts. These concepts were (i) the tri-modal mapping system, (ii) the ORCA enhanced laser track trolley and (iii) the ORCA Mini defect reidentification device.

5.1 Track Mapping System: Tri-Modal Mapping System

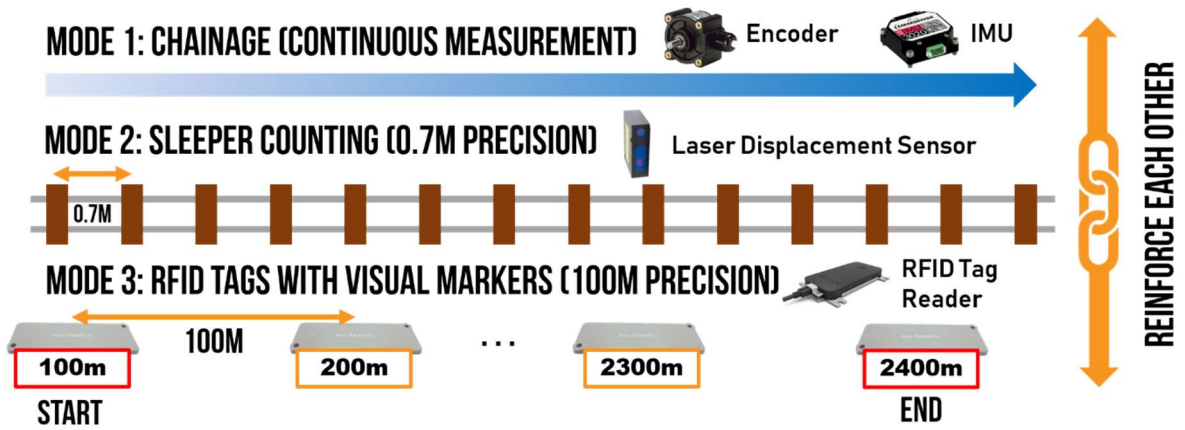

FIGURE 25. DIAGRAM SUMMARIZING THE TRI-MODAL MAPPING SYSTEM

The Tri-Modal Mapping System consists of three different modes of distance mapping (see **Figure 25**). The readings from these modes reinforce each other such that if there is significant error accumulation or a malfunction in one of the modes, the track geometry trolley or defect re-identifier would still be able to rely on the other modes to get a reasonable estimate of its position along the track. **Table 8** summarizes the three modes, as well as the sensors required to implement them.

Mode	Description	Sensors Required
1: Chainage	This mode will measure the distance travelled along the rail, known as chainage. Both the encoder and IMU are prone to error accumulation over long distances and hence would require the other modes to reaffirm its readings.	Encoder, Inertial Measurement Unit (IMU)
2: Sleeper Counting	This mode will measure the number of sleepers that have been travelled past. As sleepers are regularly spaced at 0.7m intervals along the track, they serve as good distance markers along the track.	Laser displacement sensor
3: Detection of RFID Tags	RFID tags would be placed at 100m intervals along the track. A RFID reader on the track geometry trolley or defect re-identifier would help detect the tags as it moves along the rail. The tags would serve as key landmarks along the track that would be used to revalidate the chainage and sleeper counting measurements.	Radio Frequency Identification (RFID) tags and RFID tag reader

TABLE 8. TABLE DESCRIBING THE THREE MODES OF THE TRI-MODAL MAPPING SYSTEM

5.2 Graw Trolley Substitute: ORCA – Upgraded Abtus Trolley

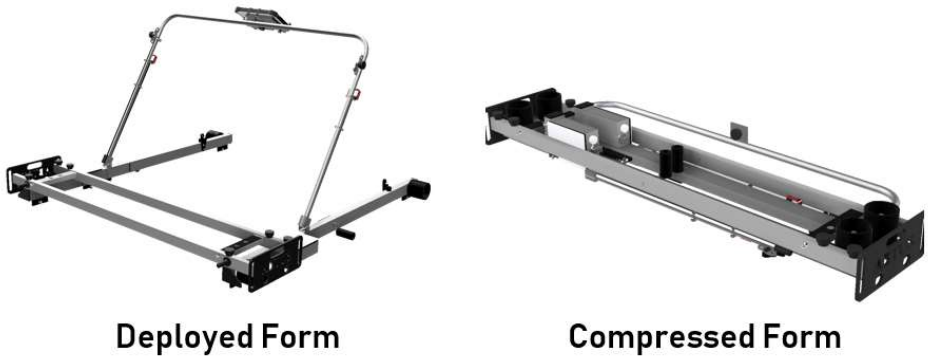

FIGURE 26. PICTURE SHOWING THE ABTUS ABT4530 TROLLEY IN ITS DEPLOYED FORM (LEFT) AND COMPRESSED FORM (RIGHT)

A decommissioned Abtus ABT4530 track geometry trolley (seen in **Figure 26**) provided by SMRT was upgraded as a substitute for the GRAW trolley that is currently being used for rail maintenance. This upgraded trolley is named ORCA (**Figure 27** and **Figure 28**) and its key features is listed down and elaborated on in **Table 9**.

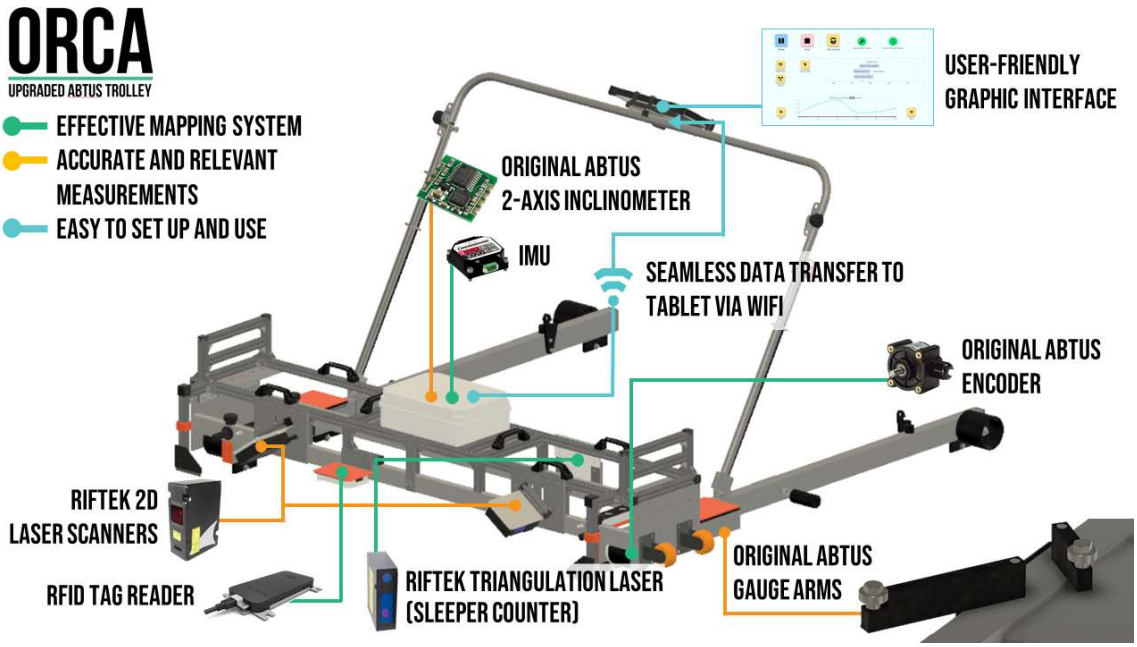

FIGURE 27. LABELLED DIAGRAM OF KEY COMPONENTS ON ORCA COLOR-CODED WITH ITS RELEVANT FEATURES

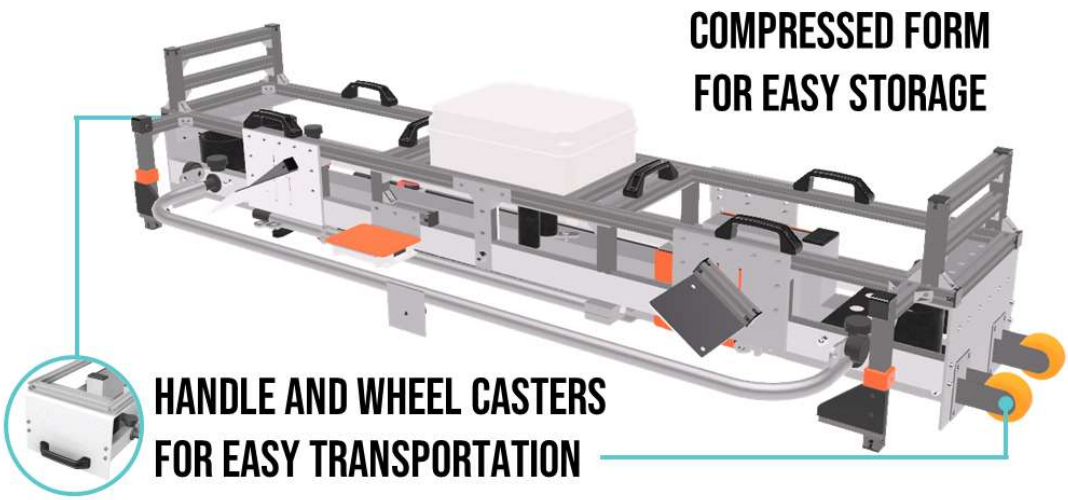

FIGURE 28. LABELLED DIAGRAM OF ORCA IN IT COMPRESSED FORM

Key Feature	Description
Effective Mapping System	The ORCA would be fitted with the required sensors detailed in **Table 8** to implement the proposed Tri-Modal Mapping System to ensure that any defects detected by the trolley would be accurately tagged to its exact location.
Accurate and Relevant Measurements	The ORCA would be reusing the high-precision sensors installed in the original Abtus trolley such as the 2-axis inclinometer (for track tilt) and gauge arms (for track gauge) to measure relevant track geometry readings. Furthermore, to match the functionality of the Graw trolley, two Riftek 2D Laser Scanners will be installed to enable the ORCA to obtain 2D rail profile scans as well as rail wear measurements.
Easy to Set Up and Use	Sensor data would be seamlessly transmitted to the user's tablet for easy access to readings. Also, the tablet would be equipped with a user-friendly graphic interface so that workers would have no issues operating the trolley. Moreover, similar to the original Abtus trolley, the ORCA can be converted into a compressed form for easy storage. However, unlike the original trolley, the ORCA would have wheels and handles installed so it can be carried around like a luggage for easy transportation of the device. This is compared to the Abtus trolley where the compressed form needs to be carried by hand.

TABLE 9. TABLE OF KEY FEATURES OF ORCA WITH EXPLANATION

5.3 Defect Re-Identifier: ORCA Mini

The ORCA Mini would be an automated device that the repair crew would use to accurately identify the position of a reported defect. The repair crew would first attach the ORCA Mini on one side of the rail and input the location of the reported defect on its dedicated mobile app. The ORCA Mini would then automatically start moving towards the defect and stop once it reaches its destination. Main features of the ORCA Mini are highlighted in **Figure 29**.

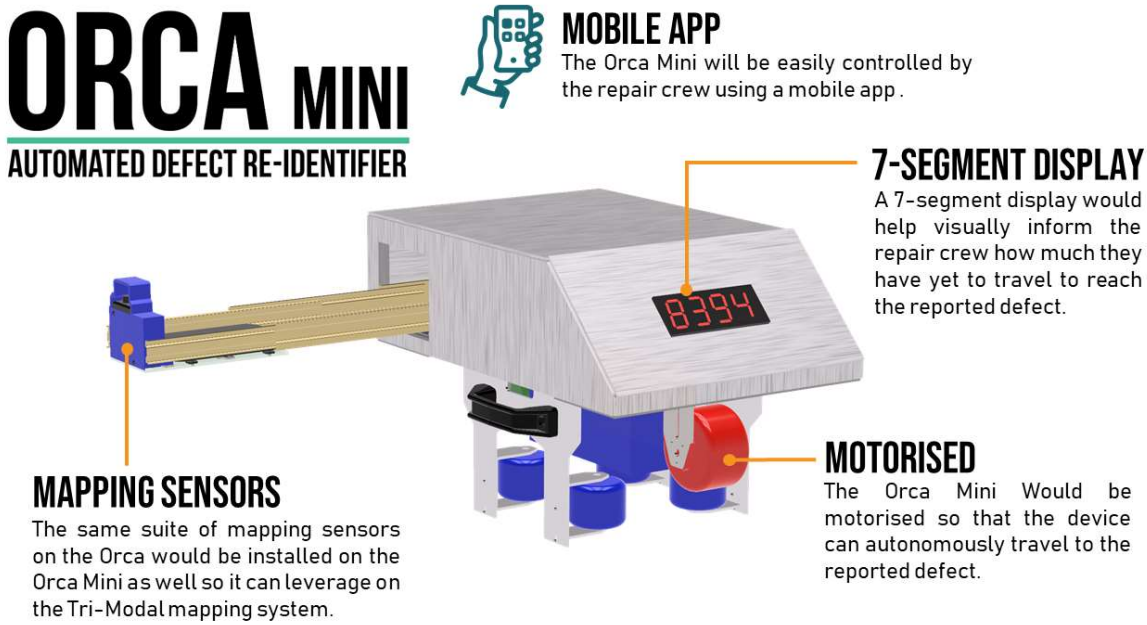

FIGURE 29. LABELLED DIAGRAM OF THE ORCA MINI DETAILING ITS KEY FEATURES

6 Prototype Development (ORCA and ORCA Mini)

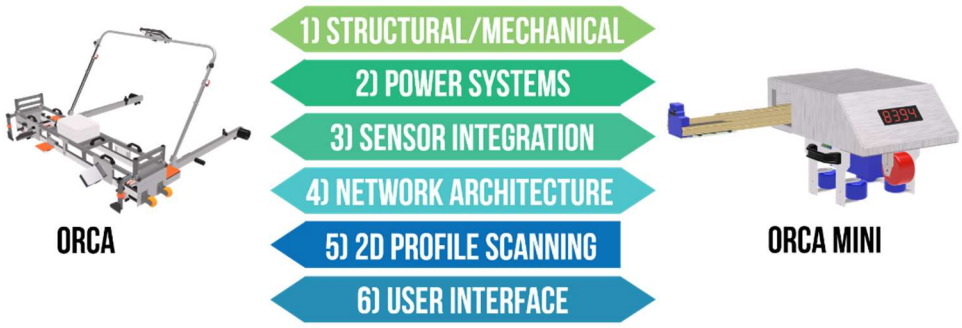

FIGURE 30. BREAKDOWN OF PROTOTYPE DEVELOPMENT

The prototype development of the ORCA and ORCA Mini can be divided into six main aspects, each elaborated in the subsections below.

6.1 Structural and Mechanical Development

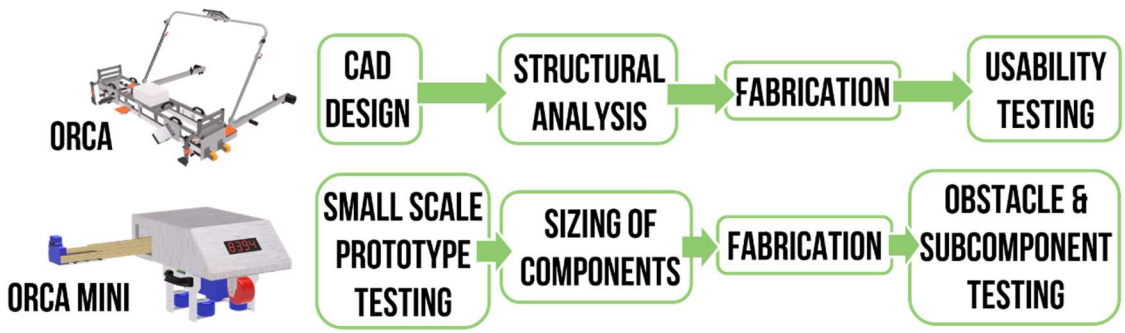

FIGURE 31. STRUCTURAL DEVELOPMENT WORKFLOW FOR THE ORCA AND ORCA MINI

Before the fabrication of the final prototype, ORCA's and ORCA Mini's designs were first validated by design software, paper calculations and small-scale prototyping. This helped to reduce the number of major design changes during the project's fabrication phase due to poorly designed components. After fabrication, usability testing was conducted on the ORCA to ensure that the final product was safe and easy to use (**Figure 31**).

6.1.1 Computer Aided Design (CAD) Sensor Positioning

For the prototypes to undergo multiple design iterations quickly, a detailed 3D virtual model of the ORCA was created on the CAD software Autodesk Fusion 360. A middle-out CAD design approach was adopted whereby existing commercial components, such as the 2D laser scanners, were first positioned at its ideal positions before optimal custom mounting frames were designed for them. An example of this process is shown in **Figure 32**.

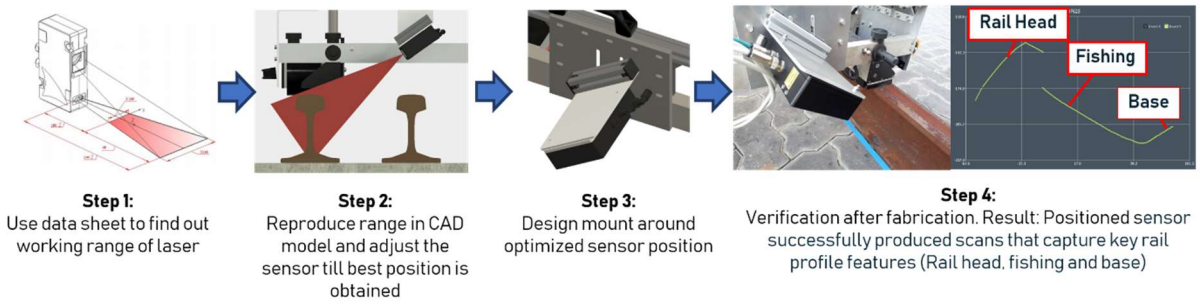

FIGURE 32. STEPS PERFORMED IN OPTIMIZING POSITION OF 2D LASER SCANNERS USING CAD

6.1.2 Structural Analysis

To determine if ORCA's design was structurally sound, Finite Element Analysis (FEA) was performed in Autodesk Fusion 360's simulation workspace. Where possible, hand calculations using concepts such as the equations of static equilibrium, Mohr's circle and Safety Factor calculation using Von Mises Criterion were used to supplement the results of the static stress simulation. A static stress analysis was performed using a combination of FEA and hand calculations on the potentially weakest part of the structure, the side plate bolts, and is included in **Annex 12**, with its steps summarized in **Figure 33**. The results of the analysis showed that the safety factor of the bolts was around 30, which meant that ORCA's design is structurally sound, and the team could proceed with fabrication.

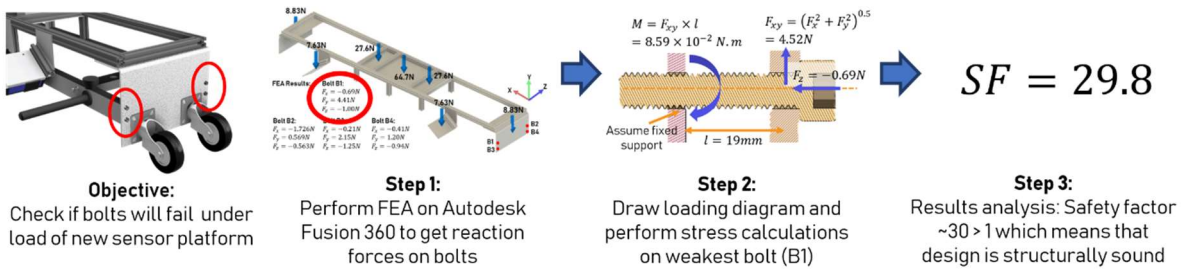

FIGURE 33. SUMMARY OF STRUCTURAL ANALYSIS DONE ON ORCA'S MECHANICAL FRAME, ELABORATED IN **ANNEX 12.**

6.1.3 Small-Scale Prototyping

To ensure the successful operation of the ORCA Mini in a real track environment, a latching mechanism is required for the prototype to stably balance on a single rail. As latching mechanisms may involve numerous moving parts and be potentially difficult to model theoretically, the team opted to produce small-scale prototypes as a quick and fast way to verify the feasibility of various ideas.

Three small-scale prototypes were produced and first tested on SUTD's test track. The advantages and disadvantages of each concept are summarized in **Table 10**. A full analysis can be found in **Annex 13**.

	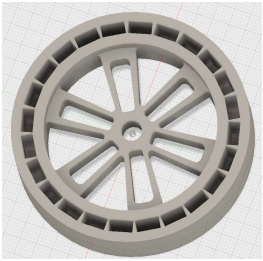		
	Magnet Wheels	**Side Grip Mechanism**	**Tri-Grip Mechanism**
Description	The utilization of magnets to increase friction by making us of the ferrous properties of the rail	The utilization of a torsional spring to grip onto side of rail	The utilization of a spring clamp on the under sides of the rail
Strengths	• Minimize space taken up by integrating it within the wheel • No moving parts	• Collapsible • Only interacts with the top and side surfaces of the rail head	• Collapsible • Most mechanically Stable • Grips rail no matter how much rail has worn out
Weaknesses	• High cost • Loss of magnetism due to impact	• If wheels are too small, side wheels may not grip rail head when rail wear is too significant	• Size of the mechanism • 3D prints less mechanically stable
Ease of fabrication	Rank 1 (Easiest to fabricate)	2	3

TABLE 10. INITIAL EVALUATION OF SMALL-SCALE PROTOTYPES

From initial results, two preliminary conclusions were made:

1. Performance-wise, the tri-grip mechanism seemed the most promising as it was the most mechanically stable and worked no matter how much the rail has worn out.
2. The magnetic wheel design could be combined with the other mechanisms to improve the stability of the system.

As the SUTD test track was not a proper reflection of an actual track environment, a visit to the training track at SMRT's Bishan was made. The aim of the trip was to identify elements that could obstruct the latching mechanism on the actual track and the spotted hazards are shown in **Figure 34**.

FIGURE 34. TRACK ELEMENTS THAT COULD INTERFERE WITH ORCA MINI'S LATCHING MECHANISM

It was observed that most obstacles were found on the underside of the rail head, which was where the tri-grip mechanism gripped the rail profile. Hence, even though the tri-grip mechanism performed the best on SUTD's test track, it would not work on actual rails.

Taking the lessons learnt at Bishan Depot into consideration, a concept for the prototype was finalised that combines the side grip mechanism with the use of magnets for increased gripping force (**Figure 35**). This design would ensure both stability and usability on an actual track environment.

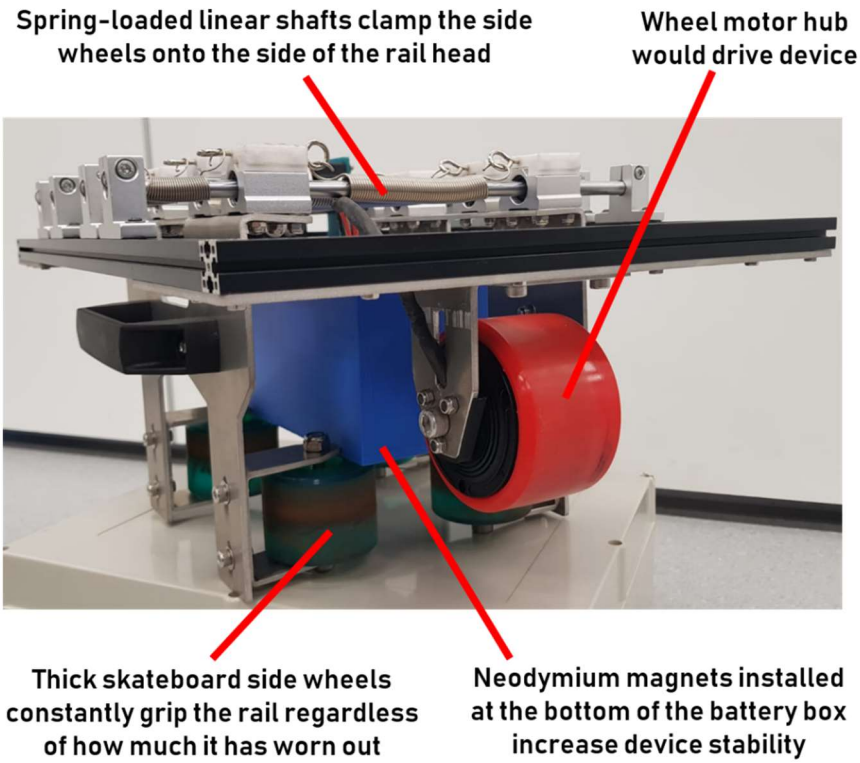

FIGURE 35. LABELLED DIAGRAM OF ORCA MINI'S LATCHING MECHANISM

6.1.4 Sizing of Components

To ensure that the ORCA Mini does not fail mechanically during the re-identification of a defect, it was important to size key mechanical components, such as its springs and wheel hub motor, correctly.

The ORCA Mini has four main springs that clamp its side wheels tightly onto the rail (**Figure 36).** These springs must be strong enough to grip the track sufficiently to prevent the device from slanting due to the weight of the cantilever that houses the sleeper counter and RFID reader (**Figure 37**). The equations of static equilibrium were used to determine constraints on the spring's length and spring constant before an appropriate one was selected from the spring catalogue. The entire process is summarized in **Figure 38** and the complete calculations can be found in **Annex 14**.

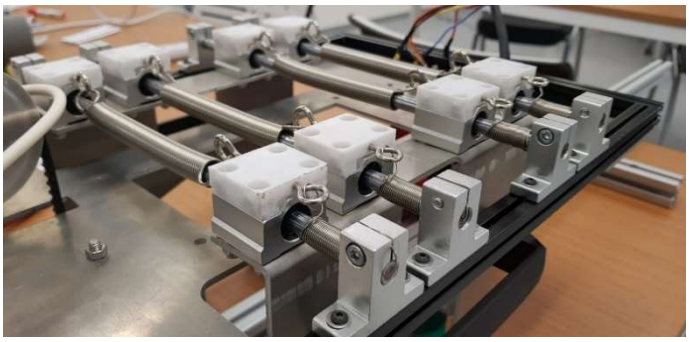

FIGURE 36. FOUR MAIN SPRINGS OF SIDE GRIP MECHANISM

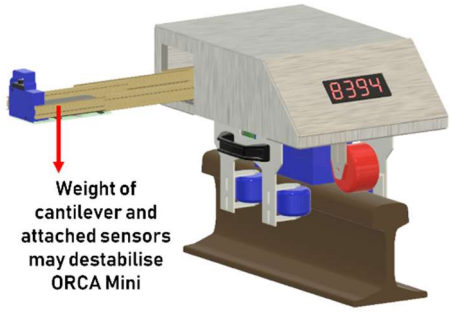

FIGURE 37. ILLUSTRATION OF HOW CANTILEVER MAY CAUSE DEVICE TO SLANT

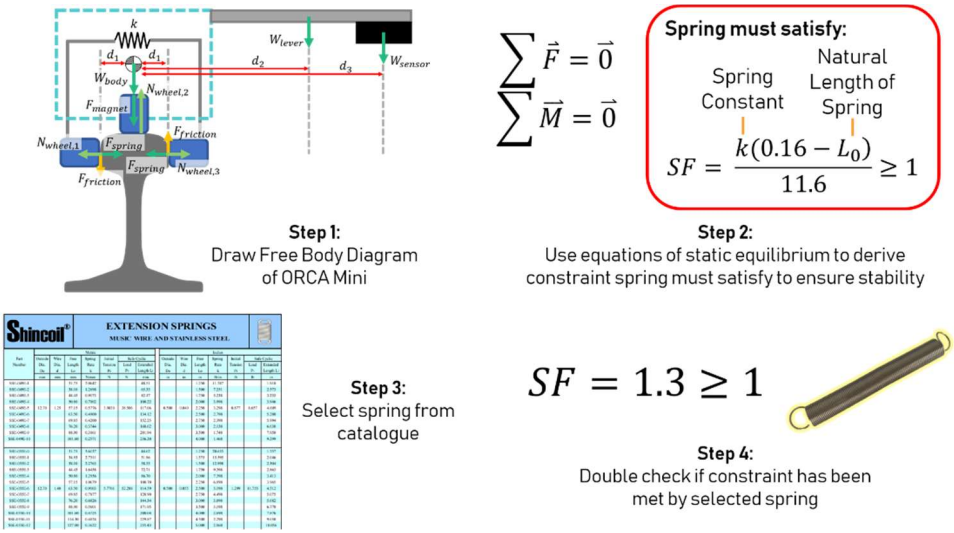

FIGURE 38. SUMMARY OF SPRING SIZING PROCESS

Once the springs were selected, the sizing of the wheel hub motor could proceed. The wheel hub motor was sized such that it could accelerate from $0\ km/h$ to $6\ km/h$ within 6 seconds without stalling. The speed $6\ km/h$ was chosen because it is the average human walking speed, which would allow the SMRT repair crew to follow the ORCA Mini by foot at a comfortable pace during operations. The motor sizing process is summarized in **Figure 39** and the complete calculations can be found in **Annex 14**.

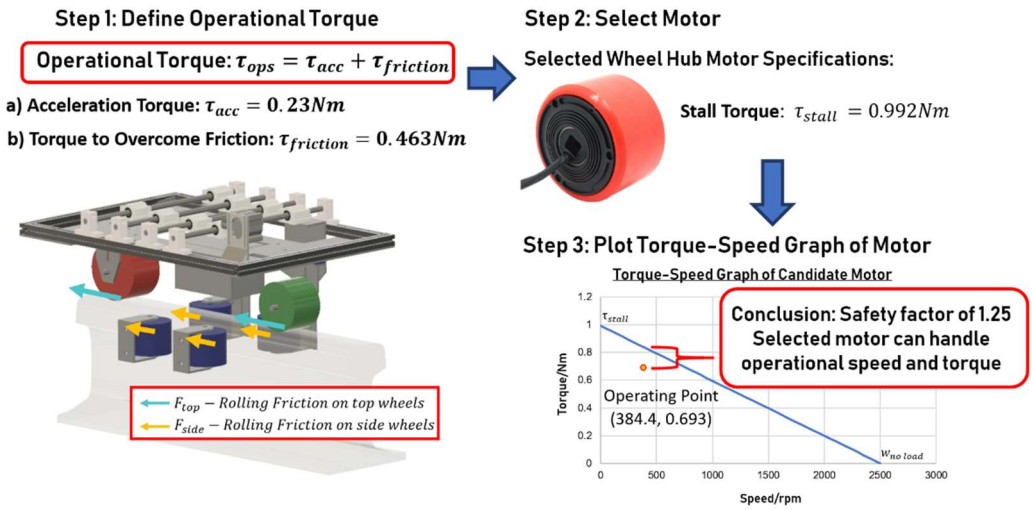

FIGURE 39. SUMMARY OF MOTOR SIZING PROCESS

6.1.5 Prototype Fabrication

The ORCA and ORCA Mini was built using readily available, standardized industrial components such as 80/20 aluminium extrusions so that it could be quickly built and modified if design changes were to be made. Nevertheless, custom components such as sensor mounts were fabricated using the equipment at SUTD's Fabrication Lab (FabLab). **Table 11** below details the key equipment and machinery used in the fabrication of the ORCA and ORCA Mini. The fabricated Orca and Orca Mini are shown in **Figure 40** and **Figure 41**.

Required Action	Machine(s) Required
Cutting of sheet metal mounts	Omax waterjet
Bending of sheet metal	Metal Shearing Machine
Cutting of acrylic plates	GCC Laser Engraving
Fabrication of plastic 3D mounts	Tronxy-X1 3D Printer
Cutting of aluminium extrusions	Horizontal Band Saw BS-916M
Drilling of holes	KTK LG-13 Manual Feed Drilling Machine / HAAS ST-10 CNC Lathe
Creating threaded hole	Tapping tool

TABLE 11. TABLE OF MACHINES THAT WERE USED DURING THE FABRICATION PHASE

FIGURE 40. FABRICATED ORCA

FIGURE 41. FABRICATED ORCA MINI

6.1.6 Usability Testing

Usability tests were done on the fabricated ORCA to ensure that it was safe and easy to use during actual operations. Key actions performed by the SMRT's trolley crew during maintenance works were tried out on the ORCA by the team and captured on video (**Figure 42**). Based on video analysis and team member feedback, design improvements were made over multiple iterations, as shown in **Figure 43** and further detailed in **Annex 15**. The results from usability testing is shown in **Table 12**. As shown from the table, all key actions could be successfully completed, and the ORCA's structural frame was ready for testing in an actual maintenance operation.

FIGURE 42. SNIPPETS OF VIDEOS HIGHLIGHTING KEY ACTIONS TESTED OUT DURING USABILITY TESTING

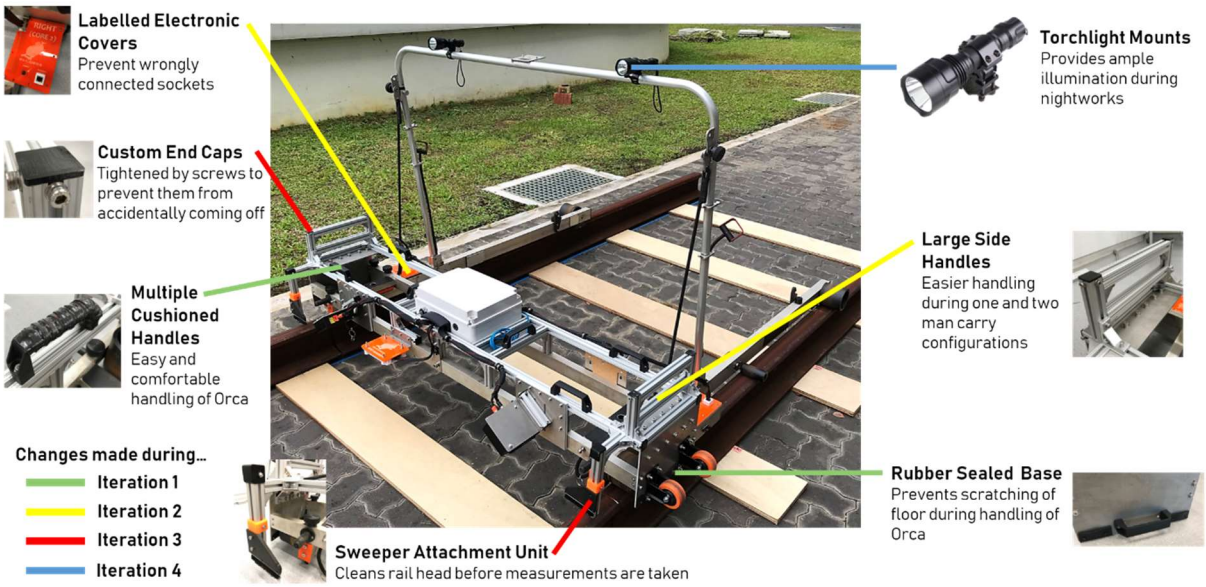

FIGURE 43. FEATURES THAT WERE ADDED AFTER USABILITY TESTING FOR IMPROVED SAFETY AND FUNCTIONALITY

Action	Recorded Time	Target Time Required by SMRT
Assembly (Both mechanical and electrical components)	2min 44s	5min
Disassembly (mechanical and electrical components)	3min 54s	5min
	Able to Complete? (Y/N)	
Climbing of Stairs	Y	
Passing through Door	Y	
Using of Lift	Y	
Single Man Carry	Y	
Two Man Carry	Y	
Four Man Carry	Y	

TABLE 12. KEY RESULTS FROM USABILITY TESTING

6.1.7 Obstacles and Subcomponent Testing

Once fabrication was complete and electronic components installed (but not yet integrated), the ORCA Mini was brought to the Bishan Depot training track for two key tests.

First, the ORCA Mini's rail latching mechanism was tested to see if it could overcome the obstacles identified during small-scale prototyping (**Figure 34**). The ORCA Mini was successful in travelling over weld points and rail clips (**Figure 44**) but could not clear the fish plates.

FIGURE 44. OCRA MINI OVERCOMING RAIL CLIP

The fish plates were simply too bulky and collided with the thick skateboard wheels of the device. Using thinner wheels was not an option as it would jeopardize the stability of the ORCA Mini when it travels on worn out rails. However, mentor Ling Ken stated that such fish plates are rare along the train network and hence, it was acceptable if the ORCA Mini could not overcome it. Therefore, it was concluded that the latching mechanism met operational requirements but could be improved on in the future to overcome fish plates.

Second, besides the latching mechanism, other subcomponents were also tested to check if they were fully functional on actual tracks before they were integrated together. Table 13 summarizes the findings as well as design adjustments made after the test.

Subcomponent	Observations	Refinements
Extended Cantilever Arm	• Cantilever arm has sufficient extension to allow both ORCA and ORCA MINI to scan the RFID location tags at the same location • Arm tends to shift and slide back towards the chassis during start-up	• 3D print lock to secure the arm during operation
Latching Mechanism	• ORCA MINI tends to tilt towards the extended arm causing it to lose its balance • Noticed considerable deflection of the side mounting plate as seen in **Figure 45**.	• Precisely weighted counterweights to improve balance. Depicted in **Figure 48**. • Installed steel brackets to reduce deflection. Realized that this was due to imperfect fabrication as the side plates were manually bent. Upgrade depicted in **Figure 46**. Result can be seen in **Figure 47**.

	• Spring mechanism feels loose once side wheels are pulled apart.	• Shortened springs to increase force of clamping
7 Segment Display	• Distance can still be seen clearly from 10m away	
Annikken Andee App/ Motion Control	• Able to maintain control from 20m away from the robot. • Robot continues to move past intended stop point due to momentum. • Motor has trouble starting up due to torque required to overcome friction and inertia	• Upgrade current electronic speed controller (ESC)
Encoder	• Able to accurately detect distance	

TABLE 13. SUMMARY OF FINDINGS AND IMPROVEMENTS TO ORCA MINI

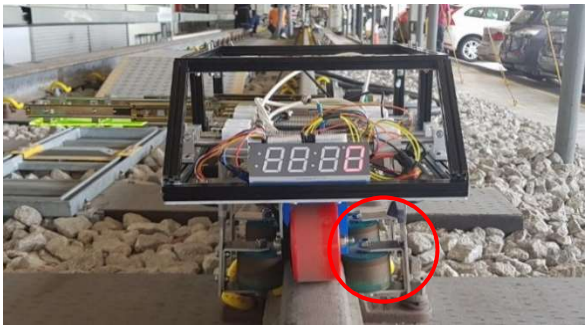

FIGURE 45. DEFLECTION AT SIDE MOUNTING PLATE

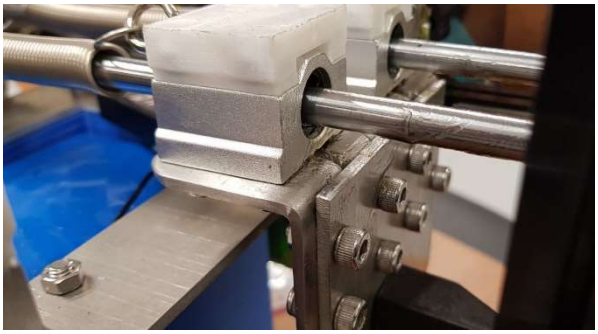

FIGURE 46. CLOSEUP OF INSTALLED STEEL BRACKETS

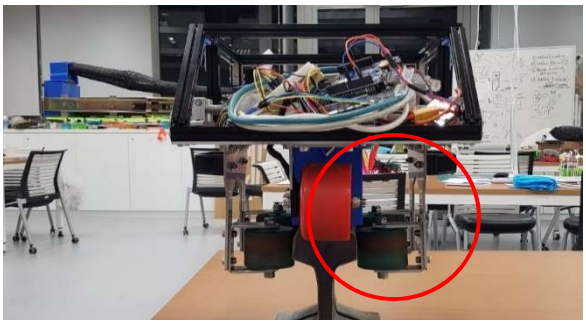

FIGURE 47. REDUCED DEFLECTION AT SIDE MOUNTING PLATE

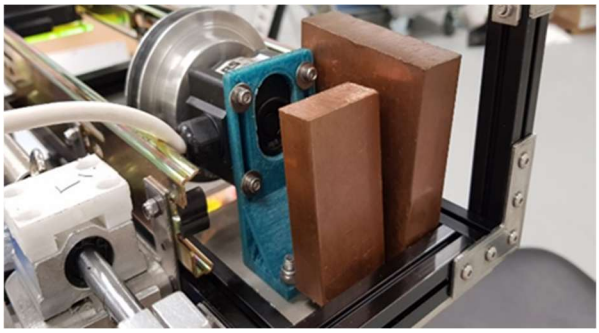

FIGURE 48. 1KG COPPER COUNTERWEIGHTS BEHIND ENCODER

6.2 Power System Development

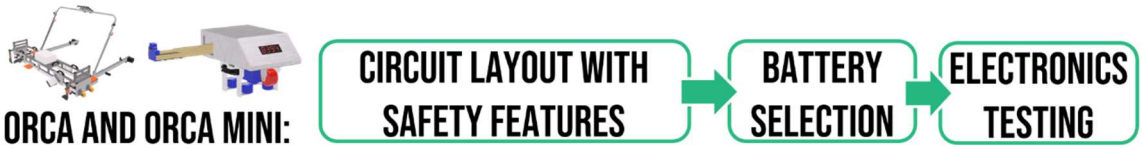

FIGURE 49 ELECTRONICS DEVELOPMENT WORKFLOW FOR THE ORCA AND ORCA MINI

This chapter provides a detailed discussion on how each of these power system aspects were developed (workflow seen in **Figure 49**).

6.2.1 Circuit Layout

The circuit layout for the ORCA and ORCA Mini were constructed carefully so that the voltage requirements for all electrical components are met.

For the ORCA, the electrical layout is split into three subsystems – the core, arm 1 and arm 2 (**Figure 50**). The core contains laser sensors, RFID readers and Raspberry Pi (**Figure 51**). Arms 1 and 2 contains the track geometry sensors (**Figure 52**).

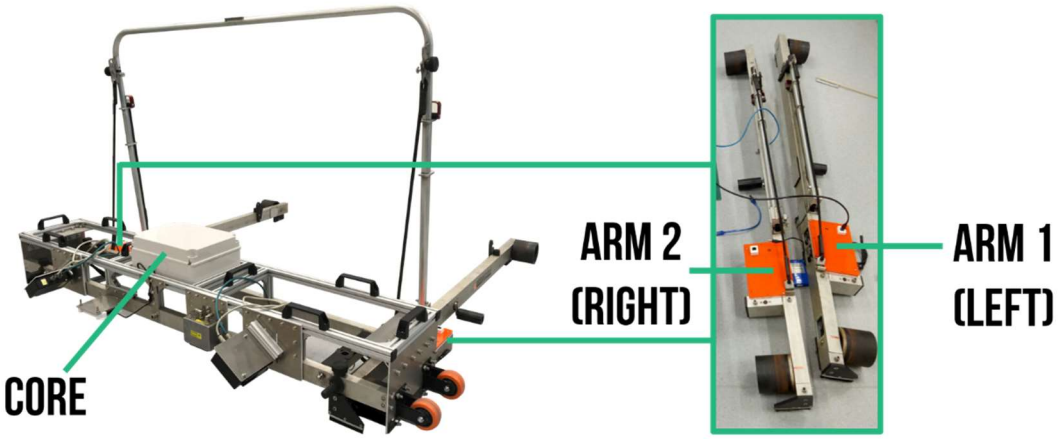

FIGURE 50. POSITIONS OF THE ELECTRICAL SUBSYSTEMS ON THE ORCA

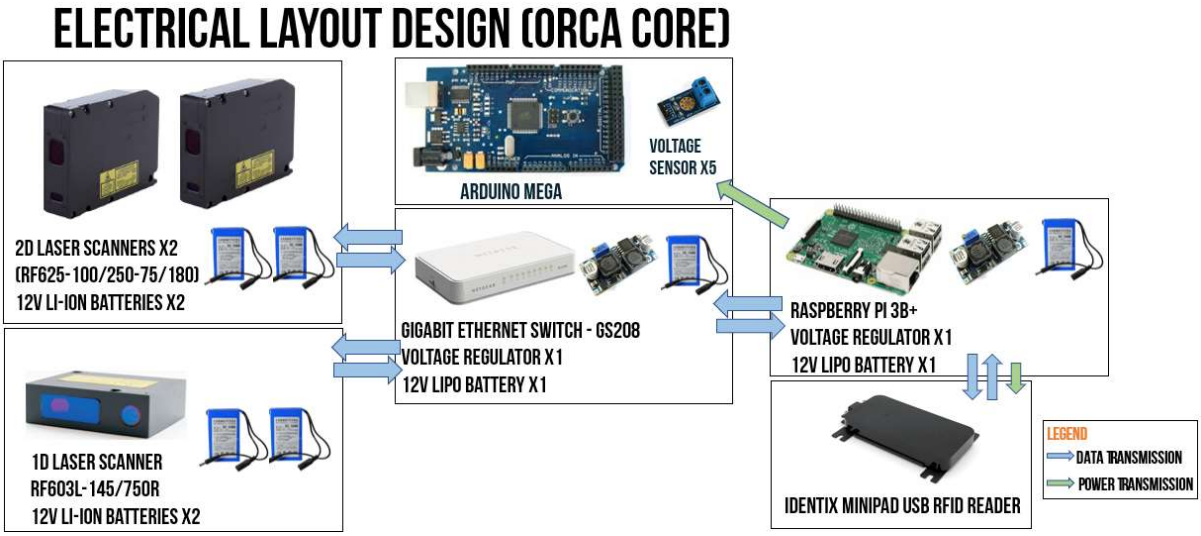

FIGURE 51. CORE CIRCUIT LAYOUT

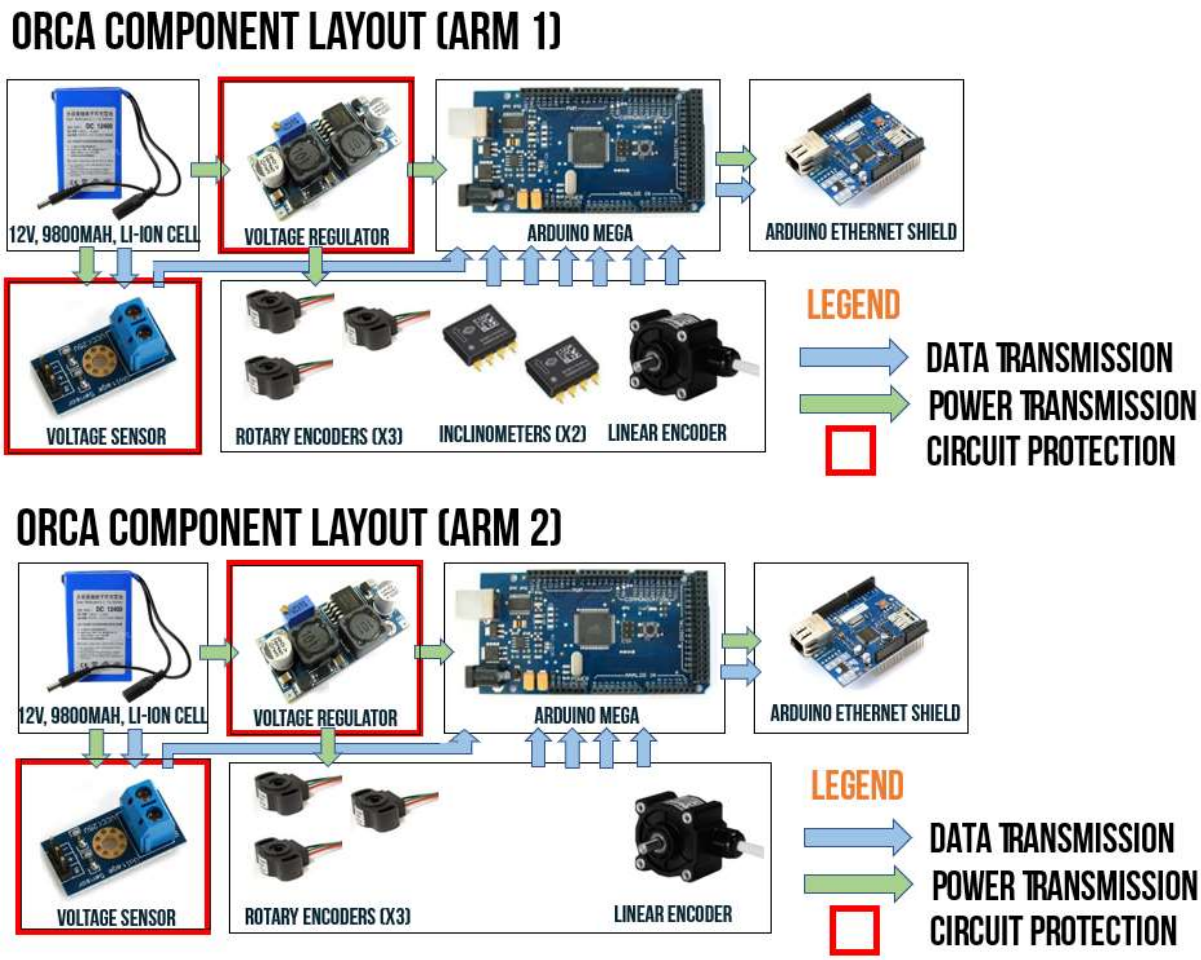

FIGURE 52. ARMS 1 AND 2 CIRCUIT LAYOUT

Composing of fewer electrical components, the ORCA Mini's circuit layout is a lot simpler than the ORCA and is powered by a single 24V battery (**Figure 53**). A battery eliminator circuit was added to ensure sufficient electricity was delivered to the power-hungry Raspberry Pi and RFID reader.

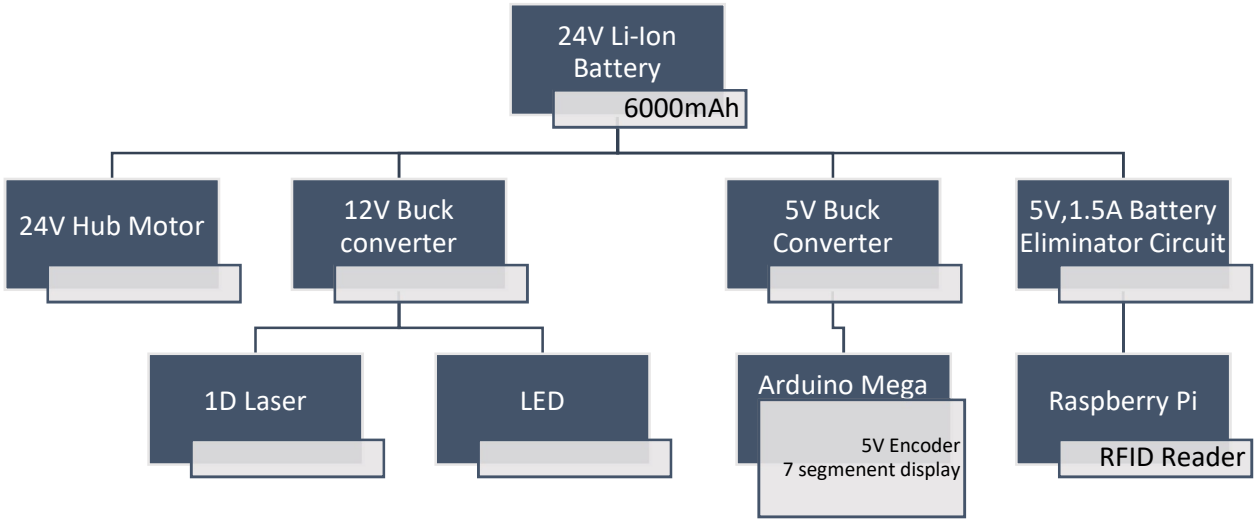

FIGURE 53. ORCA MINI CIRCUIT LAYOUT

6.2.2 Safety Features and Circuit Protection

Circuit protection elements were implemented to protect the expensive sensors from being damaged in the case of a short-circuit or power surge. When necessary, component sizing calculations were performed to ensure that suitability of a selected component. An example would be the proper sizing of the heat sinks on the voltage regulators to prevent them from overheating that is summarized in **Figure 54** and fully explained in **Annex 16**. Furthermore, other safety elements were implemented to tackle potential fire hazards on the devices, such as exposed wiring and batteries. Key circuit protection and safety elements are listed down in **Table 14** (more details found in **Annex 17**)

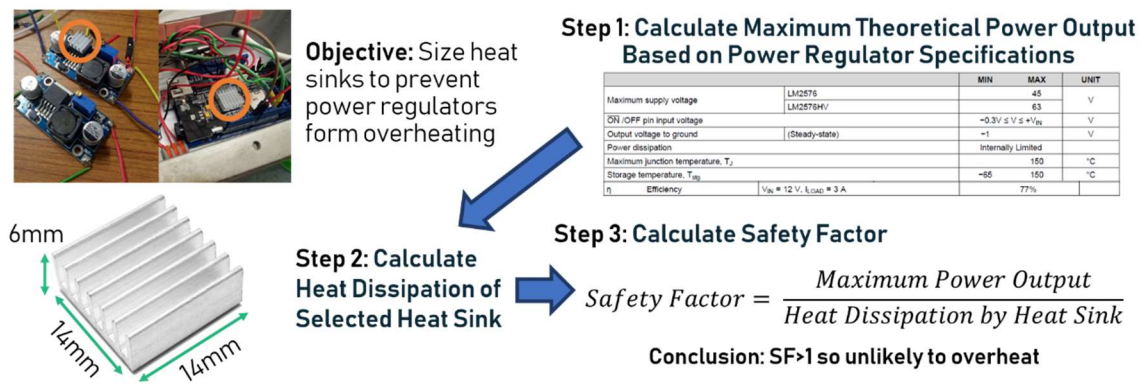

FIGURE 54. SUMMARY OF HEAT SINK SIZING CALCULATIONS

Component	Purpose
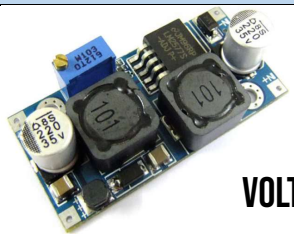 VOLTAGE REGULATOR	• On-board transistors prevent reverse current flow • Current limiting switch prevents surges from damaging electrical components • Comparator prevents voltage and power fluctuations
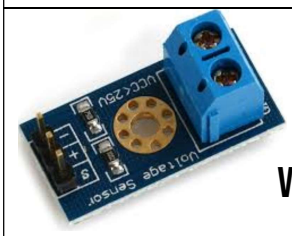 VOLTAGE SENSOR	• Tracks battery power and prevents over-discharge of battery • Prevents under-voltage of electrical components which shortens component lifespan
HEAT SINK	• Prevents overheating of electrical components which could result in loss of functions • Reduces the inefficiencies cause by increased impedance due to higher temperatures
HEAT SHRINK	• Insulates exposed connections between cables and joints • Provides mechanical strength to electrical connections

TABLE 14. KEY CIRCUIT PROTECTION AND SAFETY ELEMENTS

6.2.3 Battery Selection

6.2.3.1 Battery Capacity

Having completed the circuit layouts, it was now possible to calculate the total power requirements of the ORCA subsystems and ORCA Mini. To calculate the appropriate battery size, the following power electronic formulas were used:

$$\text{System energy consumption} = \sum_{c \in \{\text{all components}\}} \left(P_{max,c} \times \text{operational duration}\right) \quad (1)$$

$$\text{Ideal battery capacity } (Ah) = \frac{\text{system energy consumption}}{\text{operational voltage}} \times \text{safety factor} \quad (2)$$

Where $P_{max,c}$ is highest possible power consumption of component c. The safety factor targeted is 1.5, meaning that the ORCA should be able to last 6 hours given that its planned operation time is 4 hours. The required capacities for the two prototypes are broken down in **Figure 55** and **Figure 56**.

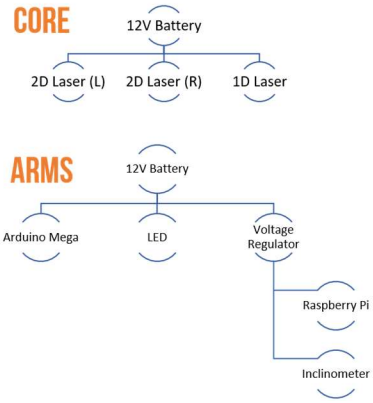

No.	Name	Qn	Voltage (V)	Current (A)	Power Consumption (W)	Operation Time(h)	Energy (Wh)
1	2D Laser Scanner	2	12-32V	0.2190-0.3333A	4-7	4	28
2	1D Laser Scanner	1	9-36V	0.0556-0.111A	1-2	4	8
						Total:	**36**

Operating Voltage: 12V
Ideal Capacity: >4500mAh

No.	Name	Qn	Voltage (V)	Current (A)	Power Consumption (W)	Operation Time	Energy (Wh)
1	Inclinometer	2	4.75-5.25V	0.0025-0.004A	0.021W	4	0.81
2	*Arduino Mega*	*1*	*7-12V*	*10 x 20mA*	*Max = 2.4W*	*4*	*9.6*
3	*Raspberry Pi 3 Model B+*	*1*	*5V*	*1-2.5*	*Max = 12.5W NOMINAL=5W*	*4*	*20*
4	Rotary Sensor	3	5V	0.00005A	0.00075W	4	0.03
						Total:	30.44

Operating Voltage: 12V
Ideal Capacity: >3806mAh

FIGURE 55. ORCA BATTERY SIZING CALCULATIONS

No.	Name	Qn	Voltage (V)	Current (A)	Power Consumption /unit(W)	Operation Time(h)	Energy (Wh)
1	1D Laser Scanner	1	9-36	0.0556-0.111	1-2	4	8
2	RFID Reader	1	5	1	5	4	20
3	Arduino Mega	1	5-12V	DC Current per I/O Pin = 20mA	Max = 2.24W	4	8.96
4	Raspberry Pi 3 Model B	1	5V	1-2.5	Max = 12.5W NOMINAL=5W	4	20
5	Rotary Encoder	1	5V	0.040A	0.2W	4	0.8
6	LED Strip 30cm	2	12	0.12	1.44	4	11.52
						Total:	69.28

Operating Voltage: 24V
Ideal Capacity: >4330mAh

FIGURE 56. ORCA MINI BATTERY SIZING CALCULATIONS

6.2.3.2 Battery Type

After sizing the batteries, most optimal battery technology was selected for the Orca and Orca Mini. From the comparison of nickel metal hydride (NiMH) and lithium ion (Li-Ion) (**Figure 57**), it is clear that Li-Ion batteries are more effective in this project given their longer lifespan and a higher power to weight ratio.

Next, Li-Ion was compared with another market alternative, lithium polymer (LiPo) (see **Figure 58**). While LiPo batteries have slimmer battery profiles, price was prioritized over compactness since cost effectiveness is a prioritized need. Our comparative analysis also showed that Li-Ion batteries are cheaper than LiPo batteries and hence Li-Ion was selected as the chosen battery type. The risk of potential combustion was mitigated using fireproof battery bags.

NICKEL METAL HYDRIDE VERSUS LITHIUM ION	Nimn	Li-ion
Nominal cell Voltage	1.25 V	3.6/3.7 V
Cycle durability	500-1000 Cycles	1000-1200 Cycles
Energy/weight	100 Wh/kg	160 Wh/kg
Energy/size	140-300 Wh/L	270 Wh/L
Power/weight	250-1000 W/Kg	1800 W/Kg
Charge/discharge efficiency	66%	99%
Energy/consumer-price	1.40 Wh/US$	2.8-5 Wh/US$
Self-discharge rate	30%/month	5-10%/month

FIGURE 57. COMPARISON BETWEEN NICKEL METAL HYDRIDE AND LITHIUM ION

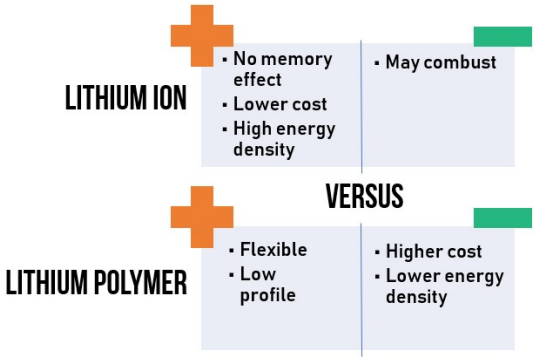

FIGURE 58. COMPARISON BETWEEN LITHIUM ION AND LITHIUM POLYMER

6.2.4 Electronics Testing

A series of tests (**Table 15**) were conducted to ensure that the circuits were functional, could survive rough handling and last the entire operation duration.

Test	Objective	Key Results and Design Changes (If Any)
Battery Durability Test (more details in **Annex 18Annex 16**)	• Determine operation time of ORCA	• ORCA was able to operate for 6h (1.5X its required operating hours)
Sensor Accuracy Test (more details in **Annex 19**)	• Determine if sensors are producing accurate results	• Sensors without voltage regulators to provide fixed reference voltage have large fluctuation in value. Voltage regulators introduced for all applicable sensors
Durability Test (carried out across all operations conducted at SUTD track, Bishan Depot Training Track and Tanah Merah – Expo service tracks)	• Determine if circuitry is robust enough for operations Identify possible causes of circuit failure	• Breaks in clamped connections and jumper wire heads were common. • Soldered critical connections and added additional adhesives on top of joints to provide mechanical strength to connections

TABLE 15. SUMMARY OF ALL ELECTRONICS TESTING PERFORMED

6.3 Sensor Integration

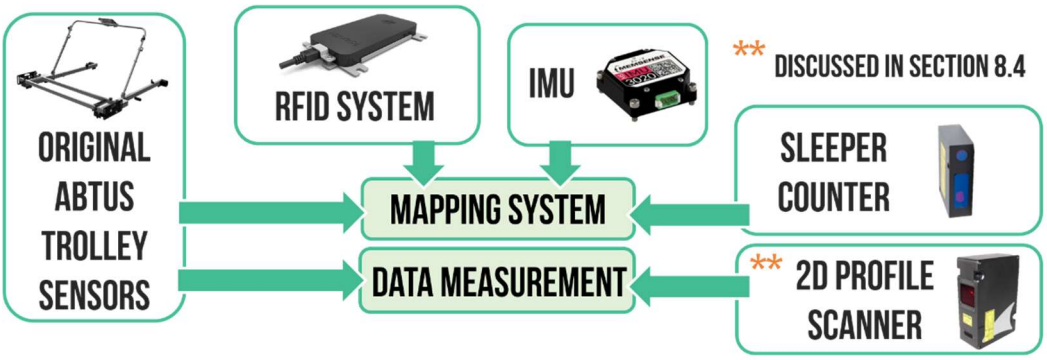

FIGURE 59 INTEGRATION OF ALL SENSORS INTO THE SYSTEM

Sensor integration involves selecting the sensors and ensuring that all the sensors can be communicated with to obtain data (**Figure 59**). Note that 2D laser scanner interfacing would be discussed in section 6.4 instead.

6.3.1 Sensor Selection

Sensors used were selected based on their suitability in meeting the design considerations of the project, in particular whether they matched the performance of the current GRAW trolley. Reasons for the choice of each sensor were comprehensively listed and documented down before a purchase was made, with an example shown in **Figure 60** and the full list found in **Annex 20.**

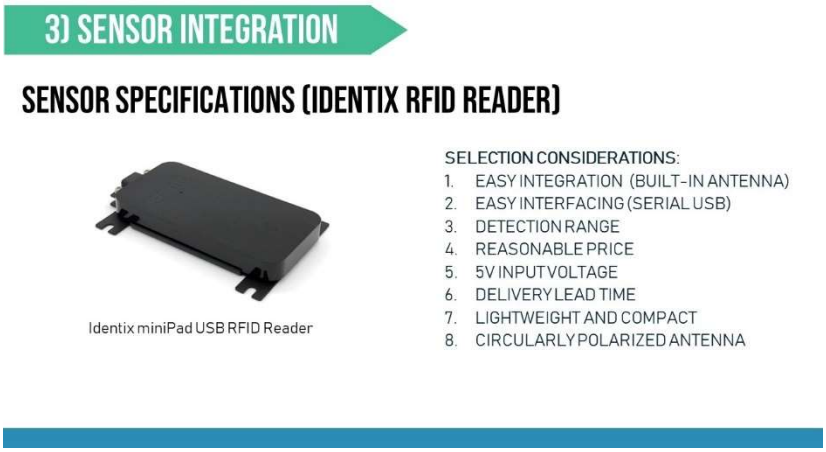

FIGURE 60. SAMPLE OF SENSOR SELECTION DOCUMENTATION

After purchase, the sensors were subsequently developed based on the sequence shown in **Table 16**.

#	Sensor Developed	Device
1	The track geometry sensors and encoders on the original Abtus trolley	ORCA
2	RFID sensors for mapping system checkpoints	ORCA, ORCA Mini
3	2D laser profile scanner for measuring railhead wear	ORCA
4	1D laser displacement sensor for sleeper counting	ORCA, ORCA Mini
5	IMU for additional position detection (development halted)	ORCA, ORCA Mini

TABLE 16. SEQUENCE OF DEVELOPMENT FOR SENSOR INTEGRATION IN THE ORCA AND ORCA MINI

Testing of the sensors on the original Abtus trolley as well as the implementation of the RFID system was completed in Term 7, while the development of the 1D and 2D laser sensors only began at the start of Term 8 due to repeated delays in the sensors' manufacturing and delivery process. The IMU was developed last as it only an enhancement and is not essential to the mapping system. The IMU sensor was eventually halted due to time constraints.

6.3.2 Sensor Interfacing

6.3.2.1 Original Abtus Trolley Sensors

The decommissioned Abtus trolley provided by SMRT had not been maintained in the past two years. Reverse engineering was thus used to document and recover track geometry measurement capabilities for the ORCA. All trolley sensors were identified (**Figure 61**) and were able to output values by being connected to an Arduino microcontroller (**Figure 62**). Hence, the sensors are in good condition for reuse in our prototype.

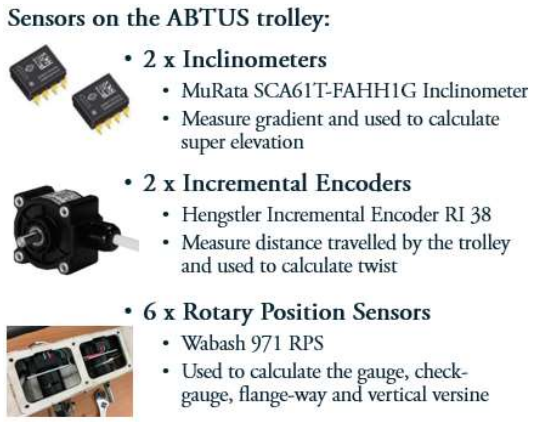

FIGURE 61. IDENTIFIED SENSORS ON THE ORIGINAL ABTUS TROLLEY

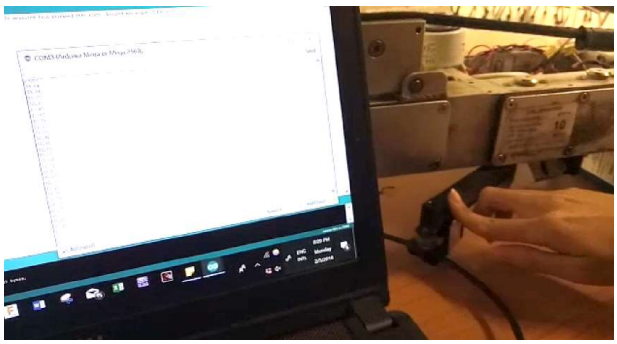

FIGURE 62. ROTARY GAUGE SENSOR BEING PRESSED AND SENDING OUTPUT TO ARDUINO SERIAL MONITOR

6.3.2.2 RFID System

RFID technology involves the transmission of radio frequency electromagnetic waves between reader and tag. The electromagnetic characteristics of the RFID reader, tag, and its implementation environment all contribute significantly to the overall performance of the RFID system. Therefore, a

RFID system must be developed that works reliably on an actual rail environment for the proposed Tri-Modal Mapping System to function.

6.3.2.2.a Initial Tabletop Tests

To find the optimal configuration of the RFID system, tabletop tests were first conducted. The effects of possible sources of interference, RFID tag type and RFID reader orientation on the RFID working range were investigated (**Figure 63**). The key results are summarized in **Figure 64Figure 65**. More detailed results can be found in **Annex 21**.

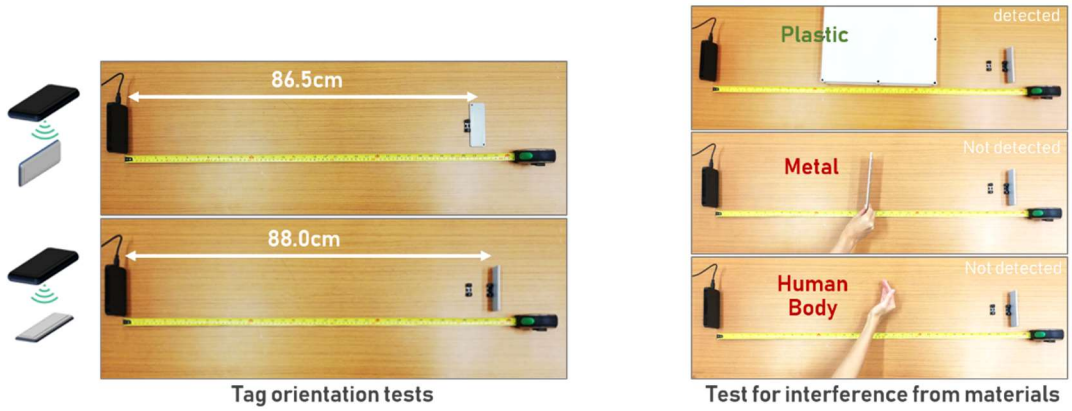

FIGURE 63. EXPERIMENTAL SETUP FOR TABLETOP EXPERIMENTS

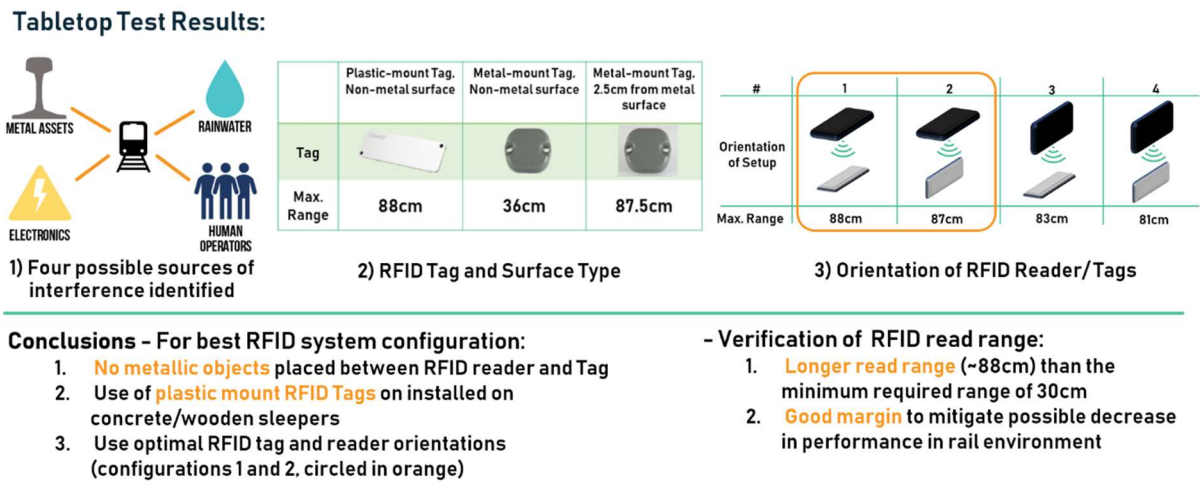

FIGURE 64. RESULTS FROM TABLETOP TESTS

6.3.2.2.b Testing at SUTD Test Track

We then proceeded to test the RFID system the test tracks in SUTD to check if it worked when installed on the ORCA and in the presence of the metallic rails. The test setup as seen in **Figure 65**.

Test Setup

Step 1: Set up serial interface between RFID reader and Raspberry Pi
Step 2: Place 9 RFID tags along the track (6 on concrete ground, 3 on wooden sleepers)
Step 3: Roll trolley along the track. Record if tags are detected, as well as signal strength for detected tags
Step 4: Repeat Step 3 for different tag positions and orientation.
Step 5: Analyze results. Revise design and repeat the experiment if average signal strength is more negative than -6000.

FIGURE 65. TEST SETUP FOR THE IMPLEMENTED RFID SYSTEM AT THE TEST TRACK IN SUTD

In the first test, only 10% of the tags were detected, and the maximum read distance was only 32cm. The system's performance improved through several test runs and design changes, as documented in **Table 17**. Finally, 100% tag detection was achieved in the final test run, with satisfactory signal strength and was ready to be tested on an actual track environment.

Test	Results	Design Changes
1	• Only 10% of tags detected • Max. reading distance: 32cm	• **Issue**: Raspberry Pi experiences a voltage dip when powering RFID reader and does not supply enough power to reader. • **Solution**: Use a power regulator to ensure a steady power supply to the Raspberry Pi
2	• Only 70% of tags detected • Max. reading distance: 45cm	• RFID reader orientation changed from (a) facing front to (b) facing downwards towards the tags 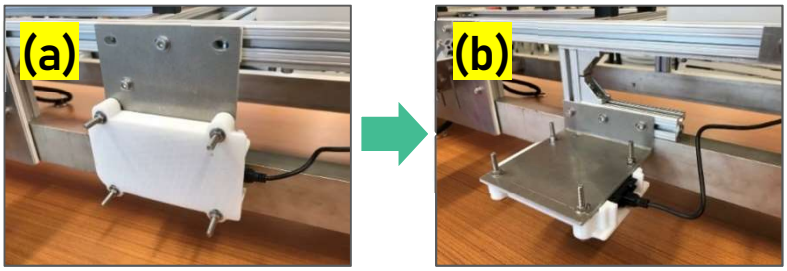
3	• Only 100% of tags detected • Max. reading distance: 61cm	-

TABLE 17. RESULTS FROM TESTING ON TEST TRACK

6.3.2.2.c Testing at Bishan Depot Training Tracks

At the training tracks, RFID tags were placed along the track, five on concrete sleepers and five on wooden sleepers. The ORCA was pushed along the track trice and all instances, all RFID tags were detected. Even so, further experimentation showed that placing the RFID tag perpendicular to the optimal position determined by the tabletop experiments (**Figure 66**) yielded a higher signal strength on the actual tracks, perhaps due to the influence of other metallic objects on the track, such as rail clips. Hence, the better performing tag orientation was adopted (**Figure 67**) as part of the final RFID setup.

FIGURE 66. OPTIMAL RFID TAG POSITION DETERMINED BY TABLETOP EXPERIMENTS

FIGURE 67. BEST PERFORMING RFID TAG POSITION ON TRAINING TRACK

Therefore, the RFID system developed can perform reliably on an actual track environment and is ready for sensor integration.

6.3.2.3 1D Laser Displacement Sensor

The sensor used for sleeper counting is the RF603 1D laser displacement sensor, which communicates through ethernet (UDP) in an automatic data streaming mode. Parametrization and configuration of the sensor was done over an RS232 interface.

6.3.2.3.a Performance Testing

We conducted tests on the 1D laser displacement sensor to verify its working ethernet interface and to test if its data is suitable for use in sleeper counting. The testing procedure and results are shown in **Figure 68**, and **Table 18** respectively**.**

Step 1: Set up ethernet interface between 1D laser sensor and Raspberry Pi

Step 2: Mount laser and direct it downwards towards a flat surface. Check if data the actual distance.

Step 3: Measure the thickness of a piece of wood with a Vernier caliper. Place the piece of wood on the flat surface in front of the laser, and check accuracy of the thickness detected by the laser.

Step 4: Repeat Step 3 for objects with different surfaces.

Step 5: Analyze results.

FIGURE 68. TESTING PROCEDURE FOR THE 1D LASER DISPLACEMENT SENSOR

Test Parameter	Results
Noise	Readings are extremely low noise No fluctuations observed when directed at a stationary surface
Accuracy	Measurements accurate up to the nearest 0.5mm
Precision	Consistent measurement values over several trials
Resolution	High resolution of 720/16384 ≈ 0.044mm
Type of Surface	Able to measure distances to wood, acrylic and concrete surfaces, in various lighting conditions

TABLE 18. RESULTS FROM TESTS OF THE 1D LASER DISPLACEMENT SENSOR

In summary, we determined that the sensor measurements are accurate, with high resolution and low noise. The laser is also able to detect on wood and concrete surfaces, which makes it suitable for detection of wooden and concrete sleepers.

6.3.2.3.b Sleeper Counting Algorithm

The sleeper counting algorithm uses 1D laser readings paired with encoder measurements to look for flat surfaces that start at viable distances from the last detected sleeper, detecting those instances as the surface of a sleeper. The state machine used for sleeper counting is shown in **Figure 69**. Since sleepers are known to be spaced 0.7m apart along the track, sleeper count corrections will improve accuracy to within 0.7m, which is the minimum precision required by SMRT.

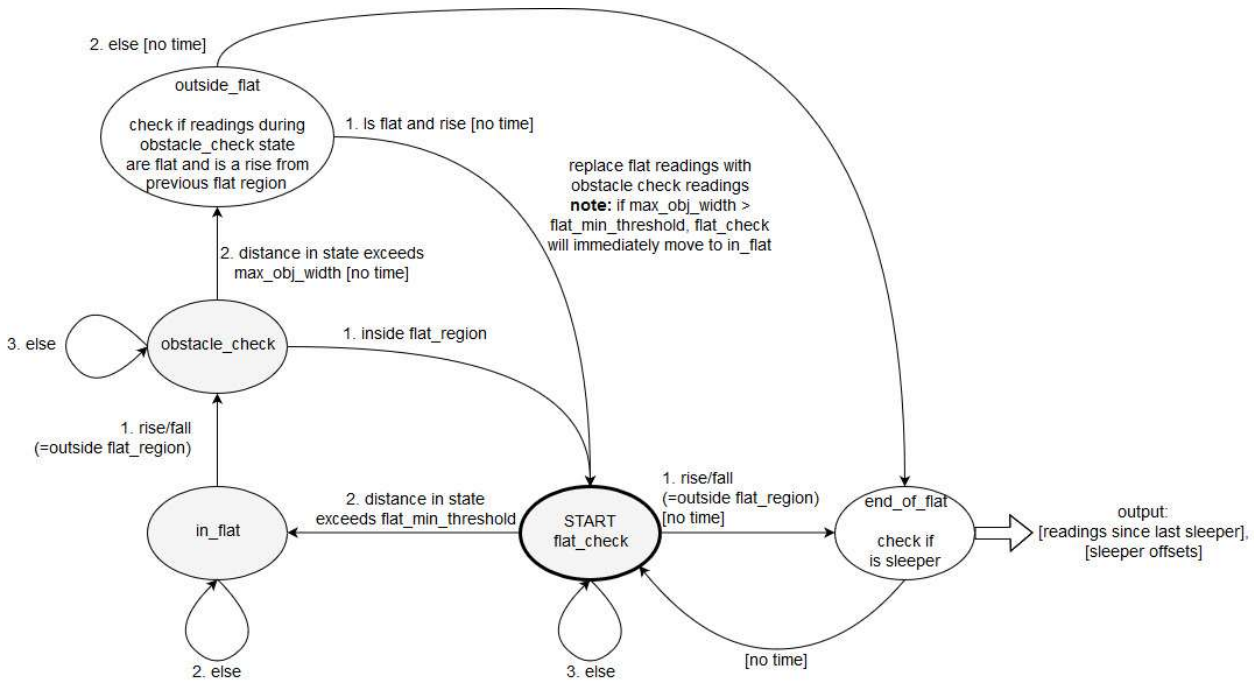

FIGURE 69. STATE MACHINE DIAGRAM FOR SLEEPER COUNTING ALGORITHM

The final chainage (distance travelled) reported is calculated based on the absolute known distance (*dist_i*), sleeper count (*slp_count*), current encoder reading (*dist_enc*) and distance from the last detected sleeper (*dist_slp*):

$$\text{Chainage} = \text{dist_i} + 0.7 \times \text{slp_count} + (\text{dist_enc} - \text{dist_slip}) \quad (3)$$

6.3.2.3.c Sleeper Counting Testing

The sleeper counting algorithm was then tested on the Bishan Depot training track. To test the sleeper counting algorithm, the trolley was pushed along the entire length of the test track at walking speed, which includes both concrete sleepers on smooth concrete floor and wooden sleepers with ballast (**Figure 70**). The algorithm was able to successfully detect all sleeper on the training track.

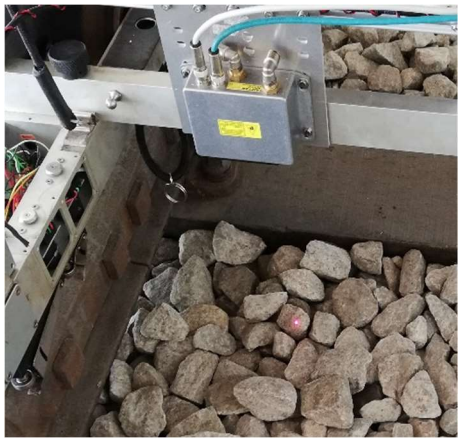

FIGURE 70. SLEEPER COUNTING ON WOODEN SLEEPERS WITH BALLAST

6.3.2.4 Inertial Measurement Unit (IMU)

An IMU was supposed to supplement the encoder in distance measurements using dead-reckoning algorithms. From research, one of the best implementation strategies is to couple extended Kalman-filters (Hellmers & Norrdine & Blankenbach & Eichhorn, 2013) to the inertial data from the IMU to reduce noise (Lobo et al., 2014).

Initially, a low-cost IMU and measured its performance and were able to obtain ±2° accuracy for yaw, pitch and roll. However, the acceleration data was extremely noisy with significant drifting error, thus it was concluded that an industry standard IMU was required for our application. Due to limitations in time and that the team faced interfacing issues with the industrial standard IMU, its development was halted. More details of the tests and results for the IMU can be found in **Annex 22**.

6.4 2D Rail Profile Alignment Algorithm

FIGURE 71. ORCA RAIL PROFILE ALIGNMENT TO RAIL WEAR CALCULATION WORKFLOW.

Measuring rail wear requires the progression from successful interfacing with 2D laser scanners followed by the application of a complex 2D curve alignment algorithm (**Figure 71**). Essentially, the algorithm needs to match the 2D laser scan measurement to the reference profile (**Figure 72**) so that rail wear data can be obtained. Since the process of aligning rail profiles has been an undocumented field, potential algorithms need to be experimented on to find a working model.

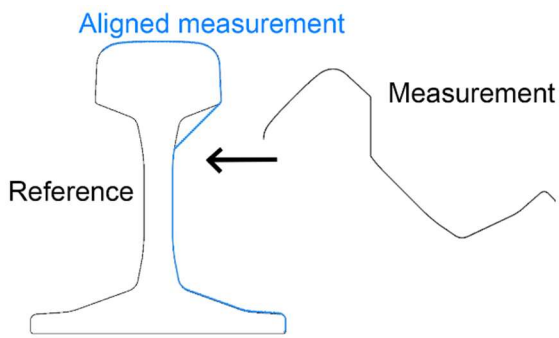

FIGURE 72. ILLUSTRATION OF CURVE ALIGNMENT ALGORITHM

6.4.1 2D Laser Scanner Interfacing

Transmission Control Protocol (TCP) and User Datagram Protocol (UDP) was used to interface with the 2D laser scanners. The manufacturer RIFTEK provides a manual (RIFTEK, 2017) detailing the protocols the 2D laser scanners use. A total of 6 different message types was implemented. One message type is shown in **Table 19**.

Data packet structure		
Type	Address, byte	Description
ushort	1..0	Measurement number
ushort	3..2	Packet number
int	7..4	System time of package sending (in microseconds)
byte	8	Protocol version number
byte	9	0xFF
ushort	11..10	Quantity of points [N]
N*sizeof(short)	(12 + N*2 - 1) .. 12	Values X
N*sizeof(unsigned short)	(12 + N*2*2 — 1) .. (12 + N*2)	Values Z
short	(12 + N*4 + 1) .. (12 + N*4)	Size of additional parameters (see below). Nowadays it equals to 8.
byte	12 + N*4 + 2	Types of additional parameters: 1 - common information 2 - math calculations
3*sizeof(byte)	(12 + N*4 + 5) .. (12 + N*4 + 3)	Serial number
uint16	(12 + N*4 + 7) .. (12 + N*4 + 6)	User XEMR
uint16	(12 + N*4 + 9) .. (12 + N*4 + 8)	User ZDiap
uint16	(12 + N*4 + 11) .. (12 + N*4 + 10)	Check sum (CRC-16)

TABLE 19. PROTOCOL FOR THE MEASUREMENT DATA FROM RF625 LASER SCANNER

Python was used to program the TCP sockets and the protocols are implemented as a modular library, riftek.py. Our library was first tested with the RIFTEK RF625 emulator (RIFTEK, 2017) as shown in **Figure 73**. When the laser sensors were delivered, it was tested and confirmed to work with the actual laser sensor itself.

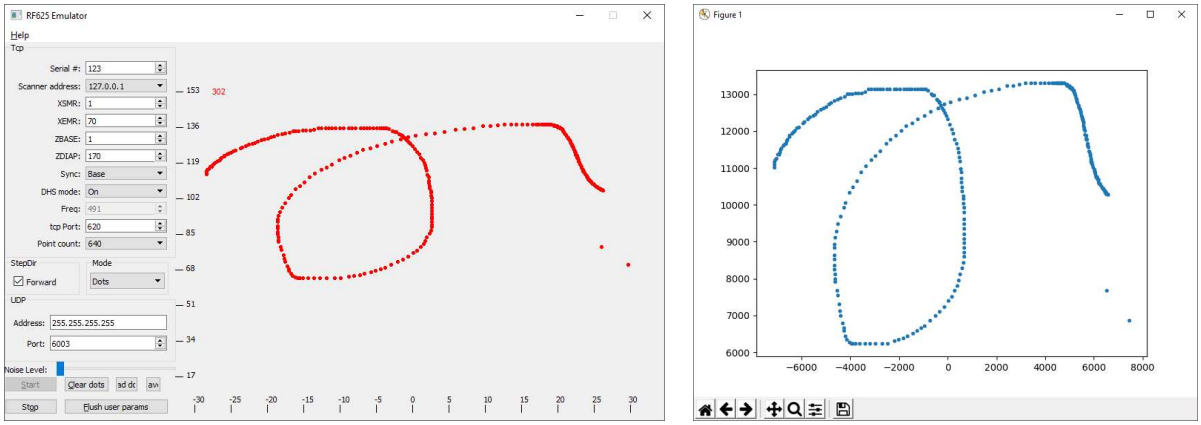

FIGURE 73. COMPARISON BETWEEN RIFTEK 2D SENSOR EMULATOR (LEFT) AND MEASUREMENT READINGS FROM OUR PROTOCOL IMPLEMENTATION (RIGHT). THE DIFFERENCE IS ONLY DUE TO SCALING.

Unfortunately, documentation on the characteristics of the data from the sensor was limited. For example, the distribution of points that the laser sensor would measure were unknown. Upon arrival of the laser sensor, these characteristics were validated via simple tests. Various objects were scanned and compared against real life measurements via tools such as measuring tapes, rulers and Vernier calipers (**Figure 74**).

These tests showed that the measurements had 1280 points discretized over a range of 16384 units. The documentation (RIFTEK, 2017) states that the range of results was 180mm on the x-axis and 250mm on the y-axis. After this conversion, the measurement results were 1:1 scale. This meant a

resolution of 180mm/16384=0.011mm on the x-axis and 250mm/16384=0.015mm on the y-axis. However, there was about 10 units of noise for each point, leading to ~0.15mm of noise.

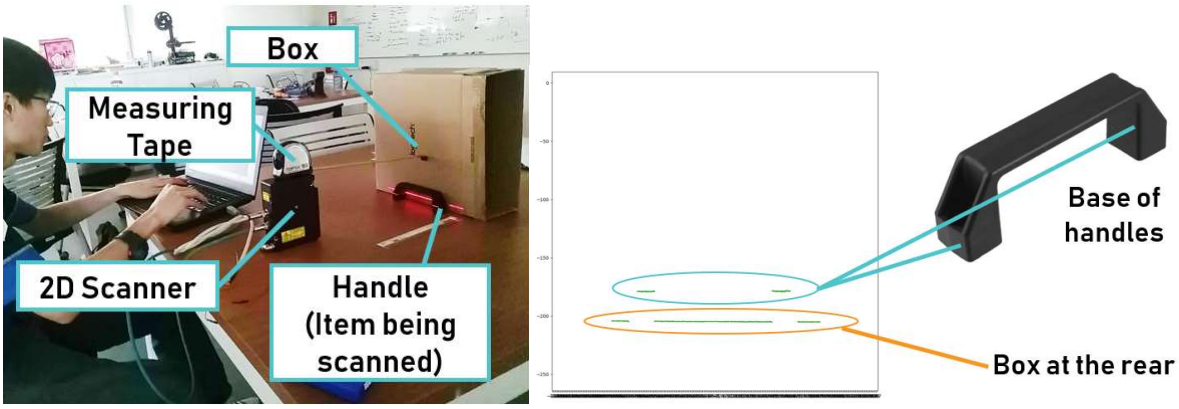

FIGURE 74. EXAMPLE TEST TO VALIDATE THE LASER SENSOR MEASUREMENTS.

6.4.2 Rail Alignment Algorithm Design Process

Based on the Section 4.4 *Pugh Chart* and **Annex 23**, 4 potential solutions were identified and attempted in order of priority, with a results summary in **Table 20**.

Priority	Solution	Result
1	OpenCV C++ Curve Matching Library (Roy, 2012)	Could not set up the dependencies for compilation
2	Detect Corner + Detect Edge of Base	Laser sensor's range is unable to include the edge of base
3	Detect Corner + Circular Intersections	Softcopy reference profile is not to scale (~2% error = ~3mm)
3.5	Detect corner + Detect straight lines	Able to accurately align reference profiles within 0.2mm variance.
4	Hardcode Fixed Transformation	Not attempted

TABLE 20. RAIL ALIGNMENT ALGORITHM PRIORITY.

After attempting solution 3, "Detect Corner + Circular Intersections" (refer to **Annex 24**). It was discovered that the softcopy reference profile was not to scale. Furthermore, the algorithm was identifying individual key points to use for alignment. This was greatly affected by the variance in each point due to the noisy 2D laser scanner measurements. Pivoting on the new knowledge, a new solution, labelled 3.5 "Detect corner + Detect straight lines" was developed.

6.4.3 Calculation of Rail Wear Using Chosen Algorithm

The "Detect corner + Detect straight lines" algorithm is based on aligning straight lines directly to the specifications given by the technical drawing. By using straight lines, alignment is computed based on many points, instead of a few specific points. And by using the technical drawing specifications, the reference profile is not needed for alignment.

Steps of the algorithm are:

1. Identify the head and the base of the profile.
2. Split the base into approximate line segments.
3. Improve the approximate line segment into straight-line segments via following:
    a. Take a line segment and computes the mean square error (MSE) of the best fit line to all the points in the segment.
    b. Constrain a side by removing points from the end and compute the MSE for each point removed. This is done to search for the subsegment with the lowest MSE.
    c. Repeat steps until the MSE no longer decreases.
4. Take intersection of the straight-line segments as key reference point, then align the profile.

This algorithm is best illustrated using diagrams. **Figure 75** shows a section of the technical drawing. The reference features used for alignment are highlighted in red. The corresponding straight-line segments and key reference point are identified on the measurement, shown in **Figure 76**. The features identified on the measurement are then aligned to match the features on the technical drawing.

Rail wear is then computed by comparing the aligned profile to the reference profile along 3 directions, vertical, 45° and horizontal, shown in **Figure 77**.

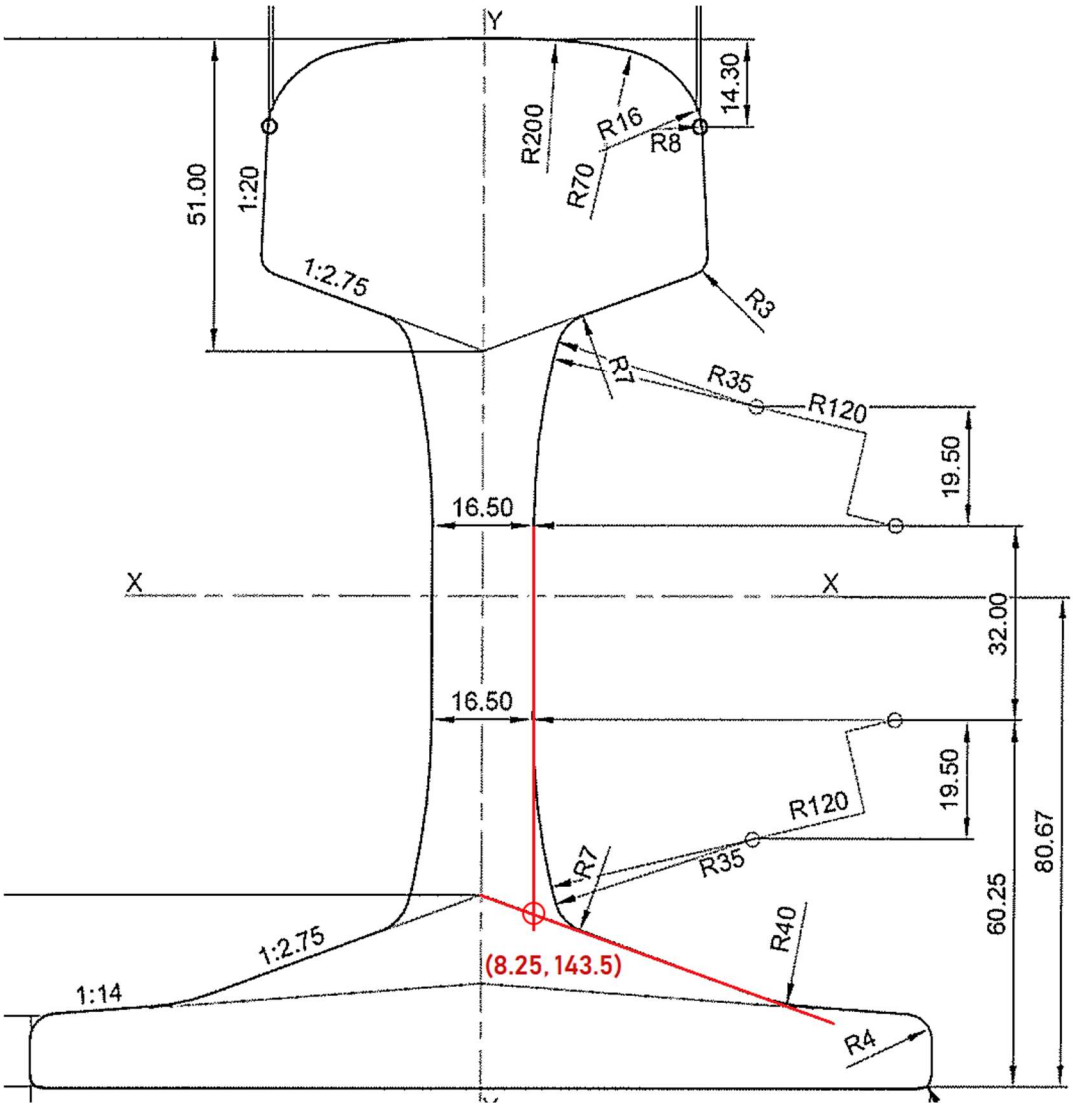

FIGURE 75 FEATURES ON RAIL PROFILE (UIC60 E2) TECHNICAL DRAWING. THE 2 RED LINES ARE THE REFERENCE STRAIGHT LINES. THE REFERENCE KEY REFERENCE POINT IS THE CIRCLED INTERSECTION (COORDINATES 8.25MM, 143.5MM).

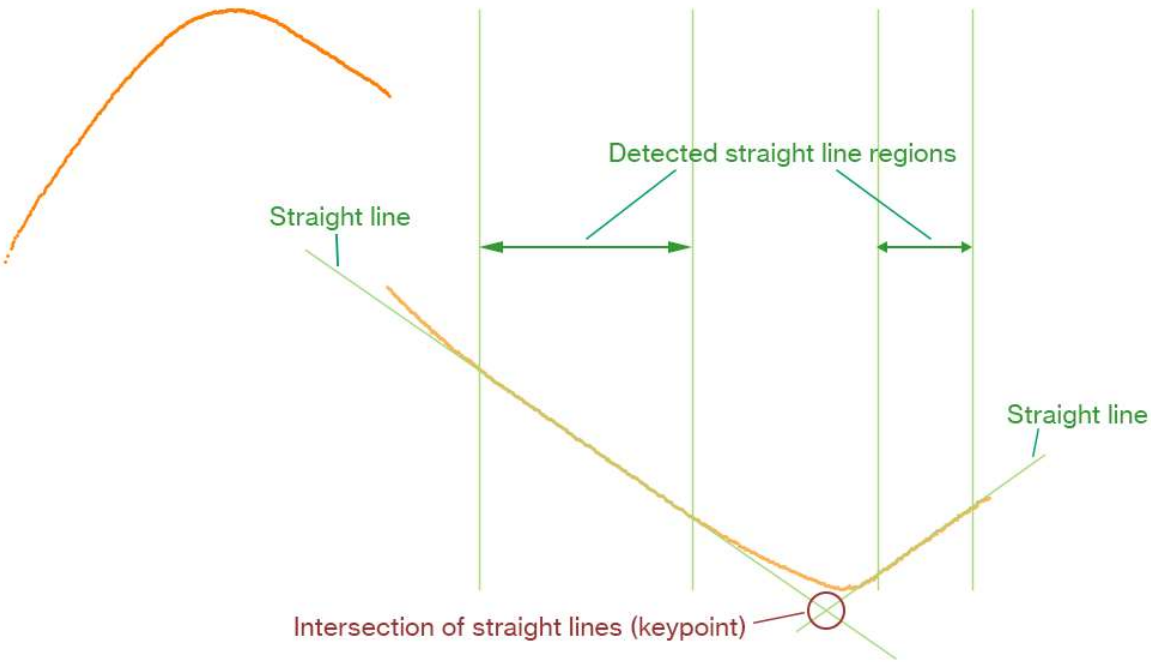

FIGURE 76 FEATURES ON MEASURED PROFILE. THE HEAD IS THE PORTION ON THE LEFT SIDE, WHILE THE BASE IS THE V-SHAPED PORTION ON THE RIGHT. THE ORANGE LINE CORRESPONDS TO THE VERTICAL LINE IN THE TECHNICAL DRAWING, WHILE THE BLUE LINE CORRESPONDS TO THE DIAGONAL LINE OF THE BASE IN THE TECHNICAL DRAWING. THE CIRCLED INTERSECTION IS THE KEY REFERENCE POINT, WHICH SHOULD BE ALIGNED TO COORDINATES (8.25MM, 143.5MM).

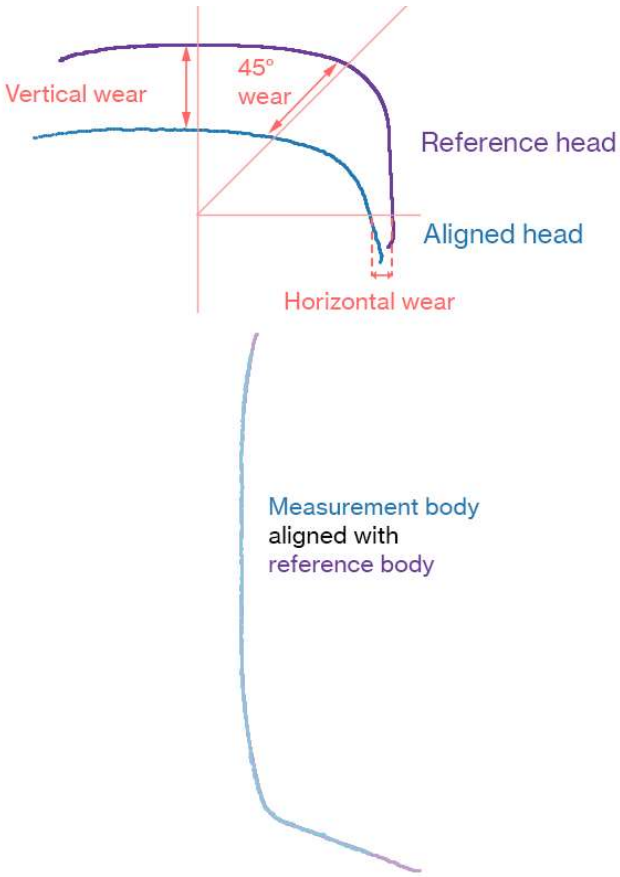

FIGURE 77 RAIL WEAR COMPUTATION

The identification of straight line regions uses the concept that MSE is highly affected by outlier points. Thus, removing the outlier points will greatly improve the MSE. This is illustrated in **Figure 78**.

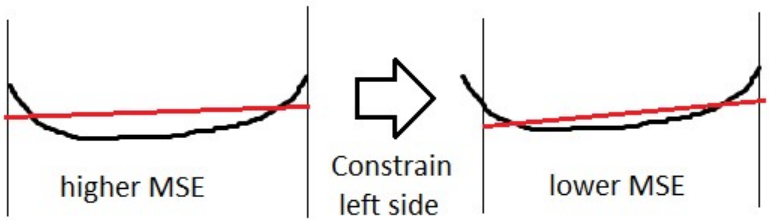

FIGURE 78 ILLUSTRATION OF HOW REMOVING POINTS DECREASES THE MSE. THE RED REGRESSION LINE NOW BETTER FITS THE STRAIGHT PORTION OF THE CURVED LINE.

Multiple iterations of Deming regression were done to obtain the line that best fits the straight portion (step 3 of the algorithm). Deming regression (Jensen, 2007) is used to account for error in both the x- and y-dimension, whereas normal regression assumes all the error only exists in the y-dimension.

The multiple iterations of Deming regression were optimized using Welford's rolling average and variance algorithm (Welford, 1962). Compared to an existing library (scipy.odr), the optimization reduced each iteration from ~0.1s to ~0.01s, 10x faster. Using an estimate of 2000m track and taking profiles every 0.125m, 2000m/0.125m * 2 sides = 32000 profiles per side. Saving 0.1s per profile translates to potentially 30min-1h of processing time saved per day, a significant amount of time savings.

6.4.4 Verification and Testing of Chosen Algorithm

To verify the algorithm, 43 2D laser scans were taken from 3 unworn rail segments (**Figure 79**) that were assumed to have zero vertical, 45° and vertical rail wear. These scans were then passed through the chosen algorithm and the results are shown in **Table 21**. Detailed results are in **Annex 25**.

FIGURE 79. UNWORN RAIL SEGMENTS PROVIDED BY SMRT

Calculated Values	Mean/mm	Standard Deviation/mm
Vertical Rail Wear	-0.00137	0.144
45° Rail Wear	-0.0161	0.0827
Horizontal Rail Wear	-0.00327	0.204

TABLE 21. MEAN AND STANDARD DEVIATION OF CALCULATED RAIL WEAR VALUES BY ALGORITHM

As shown above, all three rail wear parameters are extremely close to the assumed true value of zero while the standard deviations fall within the precision of the 2D laser scanner (0.15mm). Ergo, we can conclude that the rail alignment algorithm works, and it would provide accurate and precise rail wear values.

6.5 Network Architecture

FIGURE 80. NETWORK ARCHITECTURE DEVELOPMENT PROCESS

With all the sensors functional, they were connected into a single network using the workflow shown in **Figure 80**.

6.5.1 Architecture Framework

The Internet Protocol Suite 5 layered model (Kurose & Ross 2017) (Table 22) was used as the basic framework for the network.

Component	Network layer				
	5 - Application	4 - Transport	3 - Internet	2 - Data-link	1 - Physical
2D lasers	C Struct	TCP or UDP	IP	Ethernet	RJ45
1D distance	C Struct	TCP or UDP	IP	Ethernet	RJ45
Encoder	-	-	-	Serial	wire
Inclinometers	-	-	-	Serial	wire
Rotary	-	-	-	Serial	wire
RFID	-	-	-	Serial	wire
Tablet	Program	TCP or UDP	IP	Ethernet or Wi-Fi	*any*

TABLE 22.INTERNET PROTOCOL SUITE 5 LAYERED MODEL

Two types of sensors were identified, ethernet-based (E.g. 1D Laser Sensors) and serial-based (E.g. RFID Scanner). We note that Raspberry Pis are particularly suitable to bridge these 2 protocols as they can communicate with both ethernet and serial. However, from testing, serial data from the track geometry sensors runs at an incompatible frequency for the Raspberry Pi. Thus, Arduino microprocessors are used to convert the frequency to a compatible one.

As the Raspberry Pis are enclosed, the tablet/UI must be able to connect to the Raspberry Pi automatically and without physical interaction. Hence, we used a cron script to automatically start a server on the Raspberry Pis when they boot up, allowing the tablet to connect to it.

6.5.2 Network Design (ORCA)

The ORCA's network architecture (**Figure 81**) utilizes a hybrid of wired and Wi-Fi network. The wired connection ensures a reliable connection for sensors, while Wi-Fi allows convenient setup. Based on the position of the components, they are grouped into 3 modular units - left, right and center.

The central Raspberry Pi uses Linux libraries and built-in features for networking:

- dnsmasq is a DHCP server, which automatically configures network settings. A possible alternative is to use ifconfig and route to manually configure a static IP setting.
- hostapd turns the Pi into a wifi access point to receive connections from the tablet.
- The /proc/sys/net/ipv4/ip_forward setting enables Kernel IP forwarding, turning the Pi into a router.

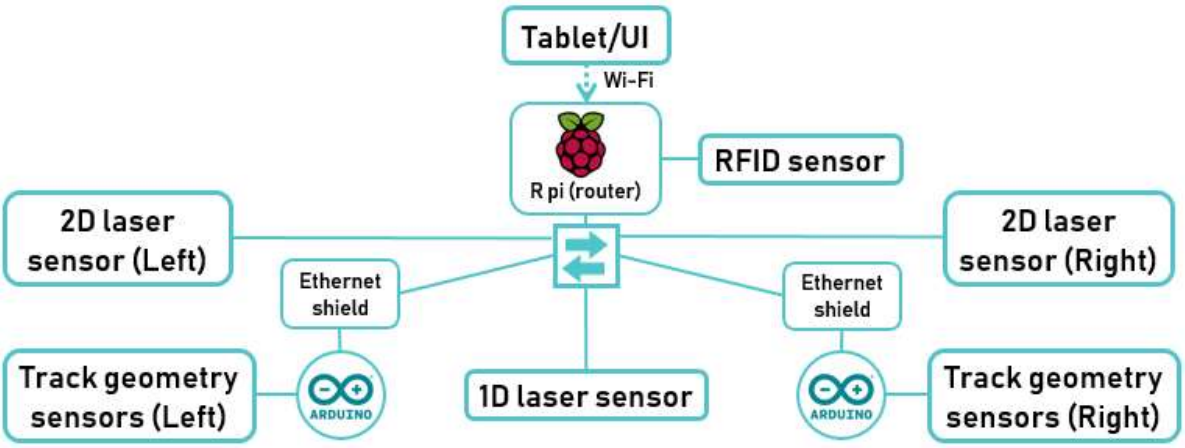

FIGURE 81. ORCA NETWORK ARCHITECTURE

6.5.3 Network Design (ORCA Mini)

The ORCA Mini (**Figure 82**) uses an Arduino Anniken Andee shield for Bluetooth connection with the user's mobile phone. The Raspberry Pi is used to interface with ethernet-based sensors and to do processing.

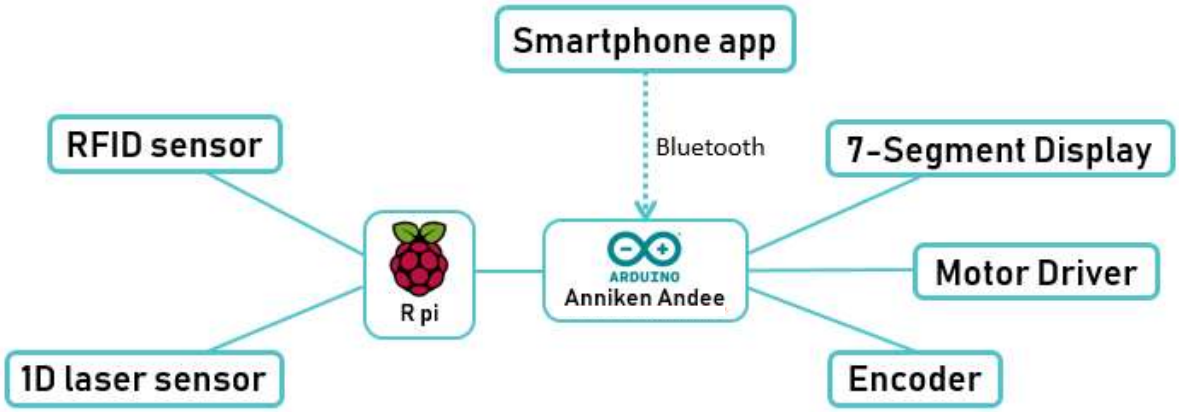

FIGURE 82. ORCA MINI NETWORK ARCHITECTURE

6.6 Software Implementation

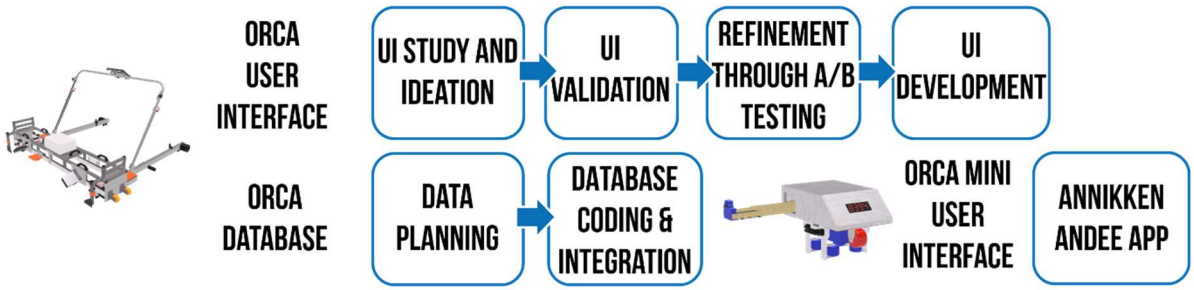

FIGURE 83 OVERALL WORKFLOW FOR SOFTWARE IMPLEMENTATION

Software implementation includes the programming of the user interfaces for the ORCA and ORCA Mini, as well as creating a database where sensor data would be stored (**Figure 83**).

6.6.1 ORCA User Interface Development

6.6.1.1 User Interface (UI) Study and Ideation

To better understand the interface that the users want, a preliminary study was conducted. This consisted of researching on design guidelines and possible application styles. Some key learning points were:

1. To keep users more awake in the night environment, blue should be adopted as the main color (Holzman, 2010).
2. A/B Testing ideology to capture and translate user feedback to the interface. (Rawat, 2017)
3. Guidelines on general interface design (Nielsen, 1995)
4. How to create minimalist interfaces to retain user focus. (UX Planet, 2016).

An effort was also made to participate in a SMRT trolley nightwork to observe how the crew used the current UI (**Figure 84**). Critical features required in the UI were identified:

1. Modals, responsive user interface to feedback problems to user.
2. Operation page that can start and end measurements.
3. Data page for data overview and export.

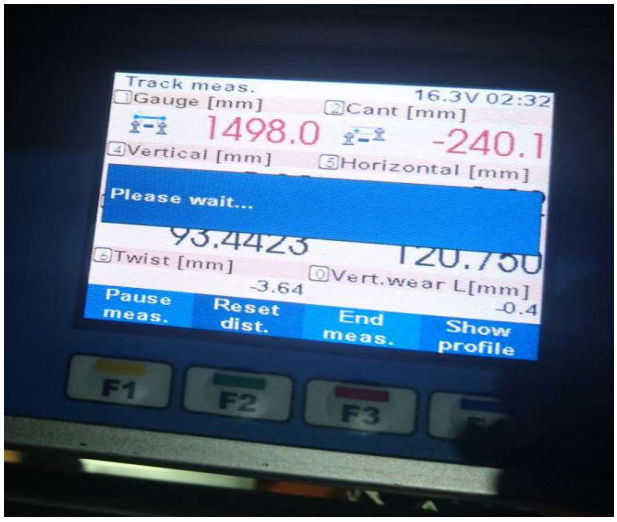

FIGURE 84. IRRESPONSIVE UI OBSERVED DURING NIGHTWORKS VISIT.

6.6.1.2 UI Validation and A/B Testing

Using the knowledge attained from UI studies, two designs were created (**Figure 85**), one with a minimalistic style and the other with an information heavy style. The two designs were converted to digital mockups using Adobe Experience Design.

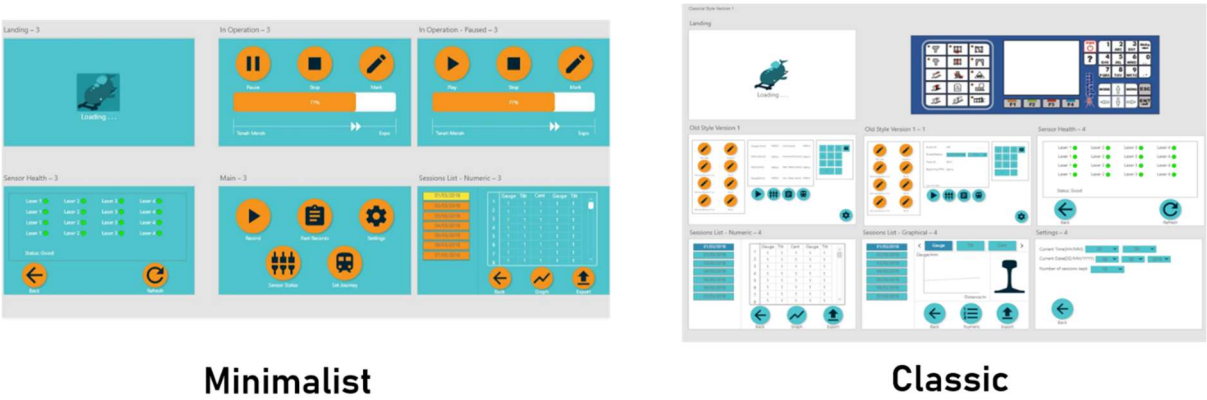

FIGURE 85. TWO POTENTIAL UI DESIGNS CREATED AFTER UI STUDIES

On 24th May 2018, the team went down during a nightworks visit to gather feedback on the two designs through A/B testing and validation interviews (**Figure 86**).

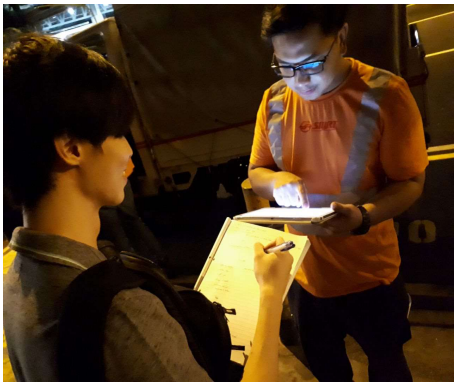

FIGURE 86. TEAM MEMBER KEVIN INTERVIEWING HASHNEL, A NIGHTWORKS PERSONNEL AT ANG MO KIO MRT AT 1AM

In A/B testing, users are given two versions of the UI with distinctly different ways of implementing the same feature separately and their efficiency with the given interfaces is measured. An example is provided in **Annex 26**.

In the A/B test done, two nightworks personnel were asked to complete three different tasks on the two UI designs and the completion times were taken down. The results are summarized in Table 23. Detailed analysis is in **Annex 27**.

Tasks performed:

1) User to start an operation and label a point
2) User to navigate to the sensor status page
3) User to locate the data page

Note: **Green rows** highlight the first interface they used

SMRT Personnel	Interface Minimal/Classic	Time taken for task 1	Time taken for task 2	Time taken for task 3
Hashnel	Minimal	30s	2s	11s
Sudiani	Classic	39s	20s	10s
Hashnel	Classic	2s	7s	4s
Sudiani	Minimal	3s	Instant	2s

TABLE 23. RESULTS FROM A/B TESTING

Results from the A/B test were inconclusive due to the small sample size and also because the crew members seemed to perform a lot better on the second interface they tested on.

Validation interviews were also conducted on the nightworks crew, which proved to be a lot more insightful then the A/B tests. During these interviews, the crew provided their thoughts on the interfaces. Key learning points obtained include:

1. Crew preferred the minimalist design over the classic one because the former had a simple and bright interface.
2. The UI must be responsive and have well-labelled buttons.
3. A user manual is required to aid the trolley crew in transitioning to a new interface.

Therefore, the Orca's UI adopted a minimalist design as it proceeded on to the UI development phase.

6.6.1.3 UI Development

UI development was divided into the backend and frontend components. The backend communicates with the sensor network and stores all the data gathered from the trolley operation. This was done using the Python Flask framework. For the frontend, the application was deployed on the tablet's browser which is connected to the local area network of the trolley. The frameworks used were AngularJS and MaterializeCSS. The programming languages and frameworks were chosen with rapid prototyping, familiarity and general hardware compatibility in mind. The ORCA's interface was re-iterated many times within the span of the project. There were several usability improvements and additional useful information being provided to the operator such as the overall sensor status and the changing of round to square buttons (**Annex 28**). Key frames from the final UI are shown in **Figure 87** to **Figure 91**.

FIGURE 87. USER INTERFACE LANDING PAGE

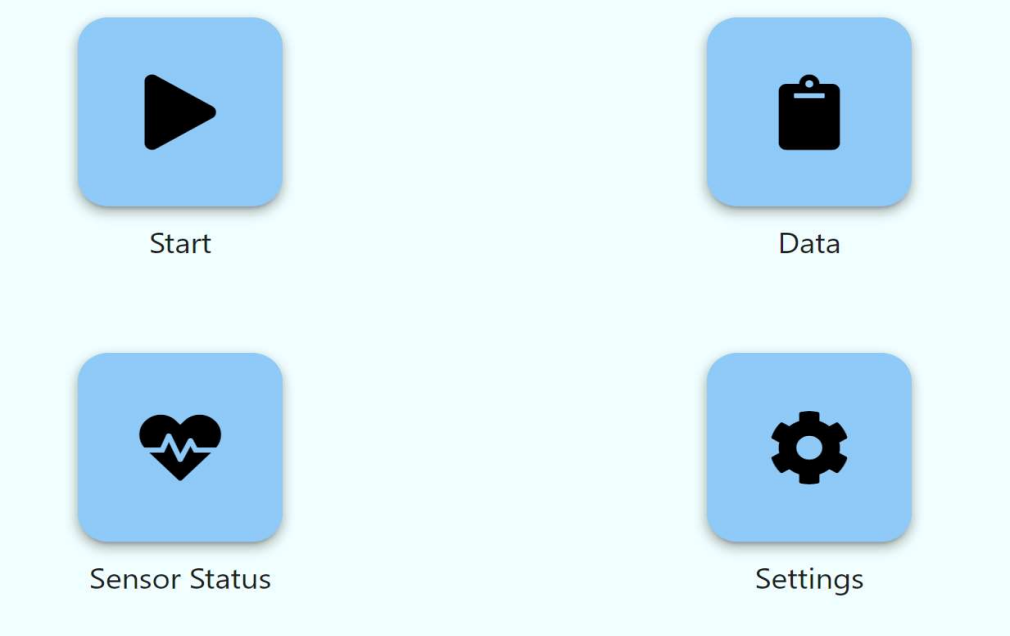

FIGURE 88. USER INTERFACE START PAGE

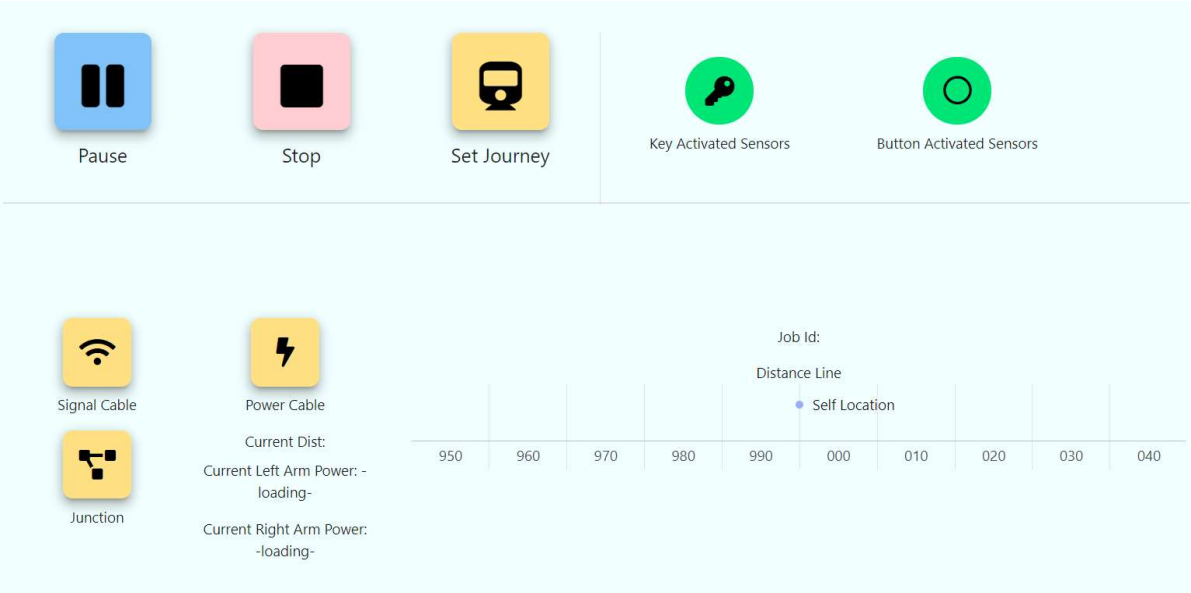

FIGURE 89. USER INTERFACE OPERATIONS PAGE

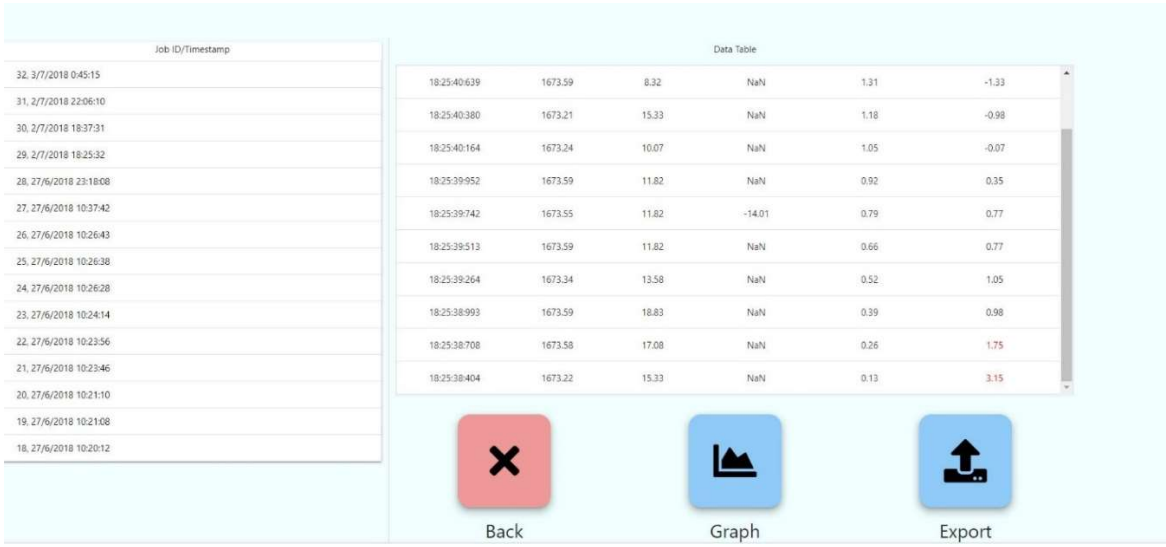

FIGURE 90. USER INTERFACE DATA PAGE

FIGURE 91. DATA PAGE SAMPLE GRAPH

6.6.1.4 UI Evaluation

Unfortunately, due to a lack of time, there was no opportunity to ask for further feedback from the SMRT crew after the UI was finalized. However, based on team members that operated the ORCA multiple times during testing, the UI's strengths and avenues for improvement in the future were identified and listed in **Table 24**.

UI Strengths	Room for Improvement
• Has responsive modals that indicate failure points • Auto pause function when sensors stop working • Highlights erroneous measurements • Can plot graphs of different parameters over distance • Has distance graph that updates distance every 5 seconds • Can view important parameters in table format • Quick operation start time with 4 parameters	• Does not incorporate laser and network boot up time and will not block users from starting operation even though not ready • This iteration not tested by trolley crew • Export duration depends on number of rail profiles scanned. The longer the stretch, the longer it takes • User station creation function not permanent • Reliant on wireless network by Raspberry Pi that occasionally disconnects

TABLE 24. SUMMARY OF ORCA'S UI STRENGTHS AND WEAKNESSES

6.6.2 ORCA Mini User Interface

For the ORCA Mini's UI, the functionalities reside on a single page mobile application and was developed using the Arduino programming on the Arduino Annikken Andee shield (**Figure 92**). To be consistent with the chosen style, the UI design followed the style of the ORCA's UI.

FIGURE 92. ORCA MINI MOBILE APP LAYOUT

6.6.3 Database Design

ORCA's software was built on a SQL database. The relational database enables easy storage of structured information needed for each operation. The following Entity Relationship Diagram (**Figure 93**) shows the arrangement of the database. In this context, each station is the location of a tag and not an actual MRT station.

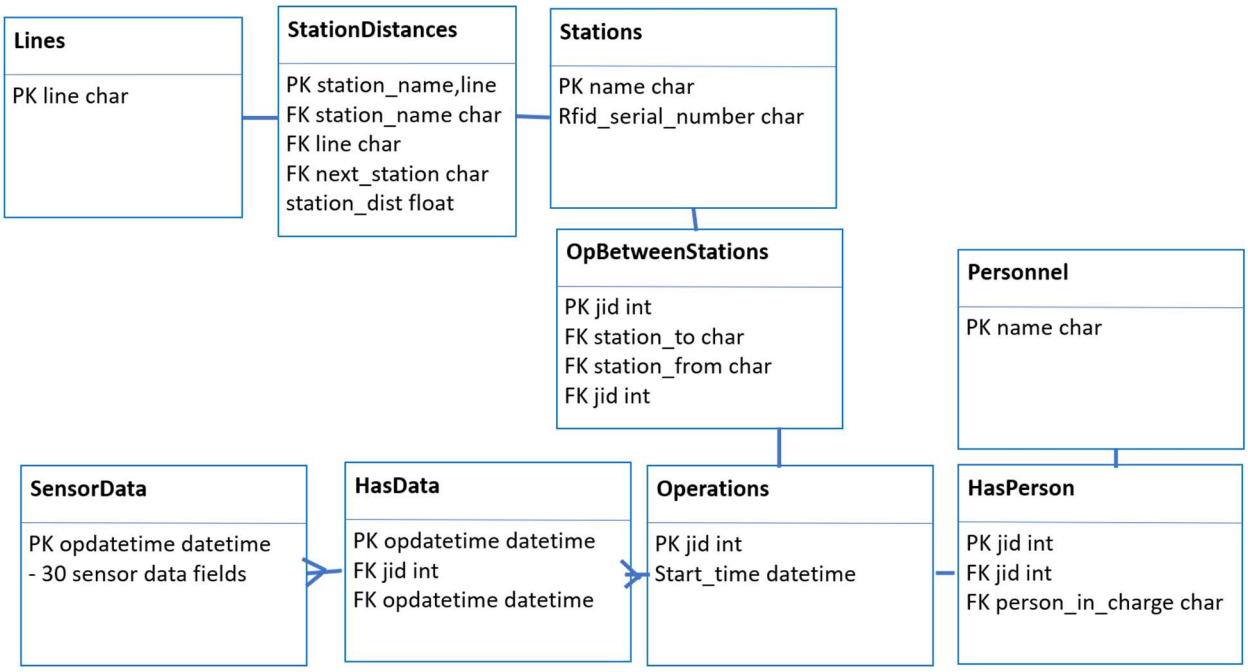

FIGURE 93. ENTITY RELATIONSHIP DIAGRAM OF ORCA'S DATABASE

6.6.3.1 Database Testing and Evaluation

The database was established on the ORCA's tablet and was able to receive and store large amounts of track parameters measured. Based on the size of each reading, it is estimated that we can store 464km worth of data. Retrieval time is dependent on length of operation; however, the export time was less than 2 minutes for a live test run between Tanah Merah and Expo.

6.7 Failure Mode Effects Analysis

Identifying the modes of failure of this project was critical to its success. We used a Failure Mode Effects Analysis (FMEA) table to identify the most critical failure modes. These risks were mitigated with strong mitigative actions. Doing so caused the failure modes to migrate towards the bottom left corner of the FMEA table, reflecting a lower severity and occurrence as illustrated with the example in **Figure 94**. The complete FMEA analysis can be found in **Annex 31**.

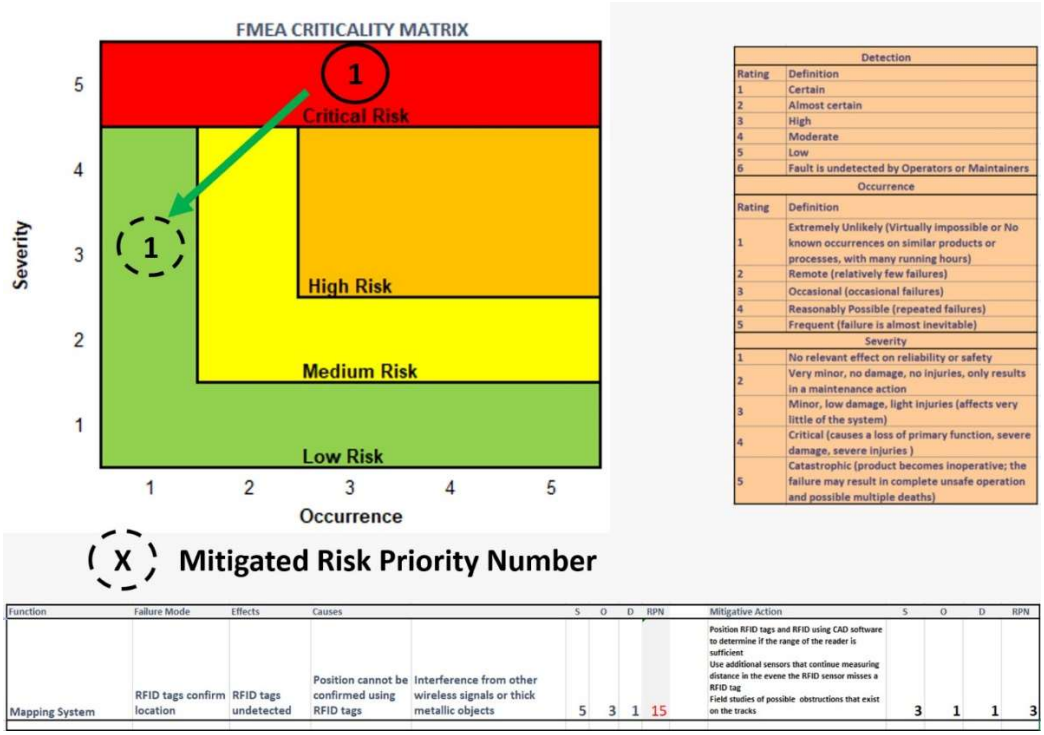

FIGURE 94. AN EXAMPLE OF A MITIGATED RISK IN THE MAPPING SYSTEM DEVELOPMENT PLAN. THE ACTION TAKEN TO REDUCE THE SEVERITY OF A RFID READER FAILURE IS TO HAVE THREE SUPPORTING SENSORS THAT CAN BE USED TO IDENTIFY THE POSITION OF THE ORCA.

6.8 Contingency Plans

Contingency plans that reduce the complexity and development time of the project were set up in case the project was delayed beyond the acceptable margins specified by our Gantt Chart (See **Annex 32**). These contingency plans reduce the complexity and development time of the project immediately by removing non-critical elements of the project. The key contingency plans have been listed in Table 25 below. Amongst these contingencies only the removal of IMU from distance measurement was implemented.

Priority (Order of Execution)	Actions	
	ORCA	**ORCA Mini**
1	Removal of IMU from distance measurement	Motorized platform downgraded to hand pushed device
2	Key point 2D rail profile alignment downgraded to fixed transformation alignment	7-Segment display downgraded to Light Emitting Diode (LED) status lights
3	User-friendly UI downgraded to baseline functional UI	Mobile App downgraded to button user interface on device itself

TABLE 25. CONTINGENCY PLANS TABLE

7 Final Integrated Testing

With all the subcomponents of the ORCA and ORCA Mini completed and integrated, the project concluded with a series of tests to verify if the two prototypes each of them could function as a complete product.

7.1 Orca Mini Final Testing

Final testing for the Orca Mini was performed at the Bishan Depot training tracks and its objective was to see if the Orca Mini could travel to a pre-defined location accurately and consistently. The Orca Mini was set to travel to a location 4-6m away from its starting point, with either 1 or 2 RFID tags in the middle. The deviation between the Orca Mini's stopping position and the specified location was then measured using a measuring tape (**Figure 95**). This was performed a total of 15 times and the results are shown in Table 26.

FIGURE 95. MEASUREMENT OF DEVIATION FROM TARGET DISTANCE

Test	No. of RFID Tags	RFID Tag distances /cm	Target Distance/cm	Deviation with Deceleration Drift/ cm	Actual Deviation /cm
1	1	210	420	42	9
2	1	210	420	53	15
3	2	210,420	490	48	27
4	2	210,420	490	69	31.5
5	2	210,420	490	118	41
6	2	210,420	490	47	12
7	2	210,420	490	134	17
8	2	210,420	490	34	12
9	2	210,420	490	36	13
10	1	210	560	43	26.5
11	1	210	560	54	29
12	1	210	560	32	5.5
13	1	210	560	17	0

14	1	210	560	34	13
15	1	210	560	21	7

TABLE 26. ORCA MINI TESTING RESULTS

A key issue discovered during testing was that due a lack of a braking function, the ORCA Mini tended to drift forwards after the point it was supposed to stop, resulting in significant deviation values. However, if this deceleration drift was accounted for, the Orca's actual deviation from the target for all runs were well below SMRT's precision of 70cm, with the average deviation for the entire test being 17.2cm.

Hence, it was concluded that the Orca Mini was accurate and consistent enough to meet SMRT's operational requirements. To tackle the issue of deceleration drift, the ORCA Mini's original Electronic Speed Controller was upgraded to a Vedder Electronic Speed Controller (VESC) which allowed the ORCA Mini to reverse and brake.

7.2 Orca Final Testing

For the ORCA, two final tests were conducted to evaluate the prototype – one for repeatability and another one for endurance and operational.

7.2.1 Repeatability Test (Bishan Depot Training Track)

The operations on Bishan Depot training tracks were used to compare the consistency of readings collected by the ORCA against the readings collected by SMRT's current TGMT, the GRAW trolley. During this test, each trolley was operated twice over a known segment of track with a designated starting and ending point spanning across 25m (**Figure 96**). A critical track parameter, the vertical rail wear was then plotted on the same graph and the average difference in readings compared against each other (**Figure 97**). In summary, the ORCA was more consistent with an average absolute difference of 0.23mm between both operations, while the GRAW had a difference of 0.58mm difference, slightly more than double the error of the ORCA. The ORCA was also able to produce a higher resolution scan along the 25m rail segment (8 readings/m) compared to the GRAW trolley (1 reading/m).

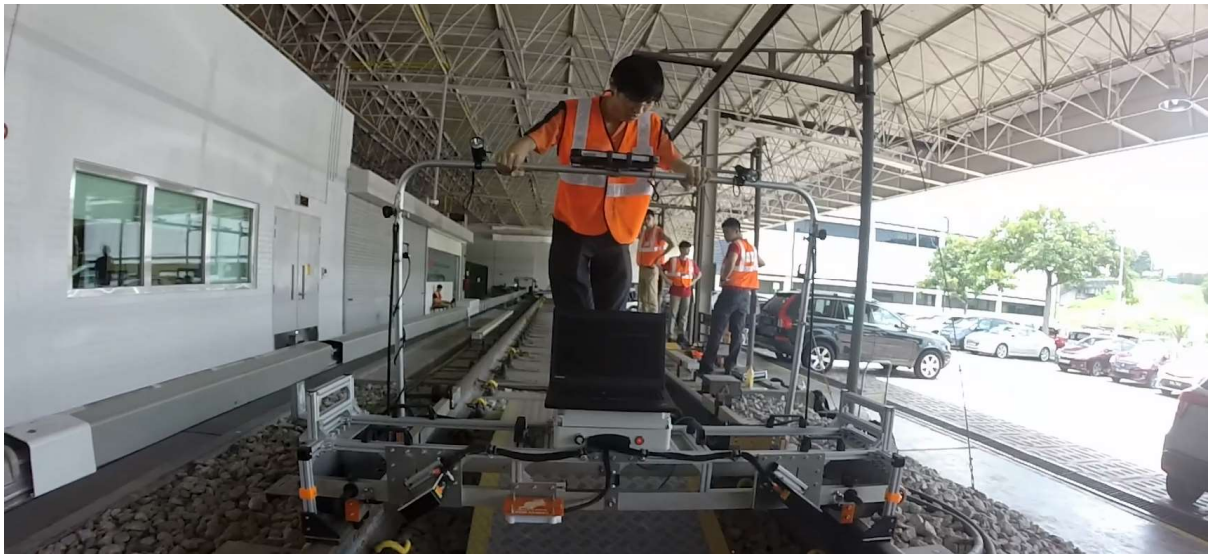

FIGURE 96. DESIGNATED END POINT OF THE OPERATION.

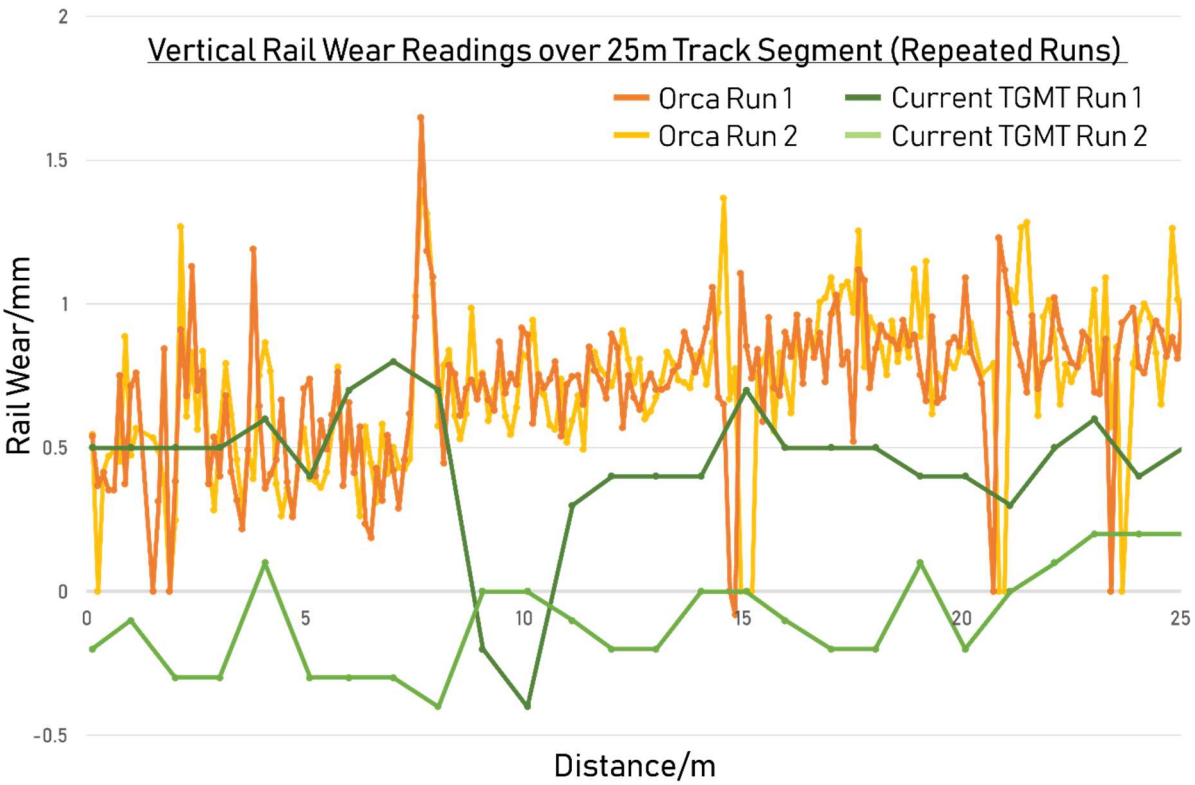

FIGURE 97. VERTICAL RAIL WEAR DATA COMPARISON BETWEEN ORCA AND SMRT'S TGMT, THE CONSISTENCY AND RESOLUTION OF THE ORCA'S READINGS ARE OF A SIGNIFICANTLY HIGHER QUALITY.

7.2.2 Endurance and Operational Readiness Test (Tanah Merah – Expo Track Segment)

To conclude the project, an actual nightworks run was arranged in conjunction with SMRT's TGMT maintenance operations between Tanah Merah and Expo MRT station (**Figure 98**). SMRT's TGMT was to operate in front of the ORCA, afterwhich the readings from both trolleys were to be compared against each other.

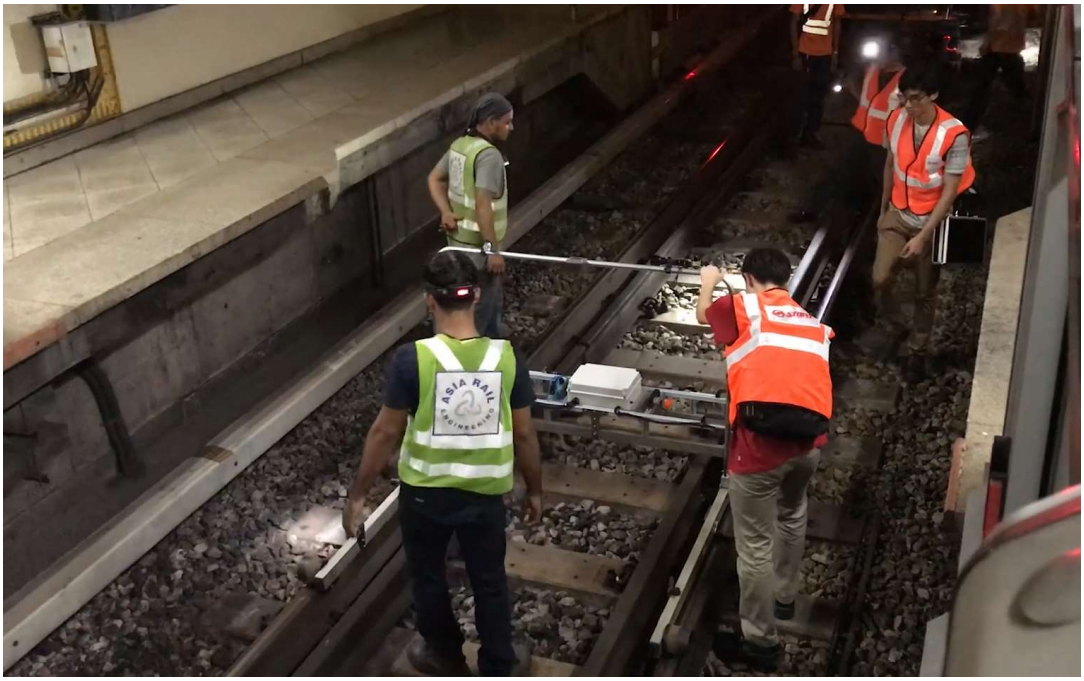

FIGURE 98. FINAL TEST ON AN ACTUAL RAIL SEGMENT BETWEEN TANAH MERAH AND EXPO.

In terms of operational readiness, there were no major structural failures on the ORCA during the entire run. The various features implemented to make the ORCA safe and easy to use such as the multiple handles, fixed castor wheels and torchlight mounts were extremely helpful during the transportation of the ORCA onto the track, as well as during the actual live run (**Figure 99**).

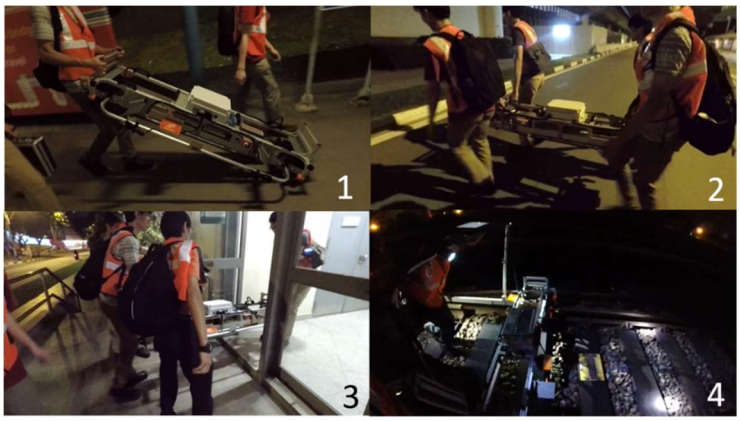

1. One Man Carry over long straight stretch
2. Four Man Carry across road
3. Two Man Carry through door
4. Torchlight illuminating rails

FIGURE 99. SAFETY AND ERGONOMIC FEATURES OF ORCA BEING UTILISED DURING LIVE OPERATIONS

In terms of endurance and reliability, the ORCA captured a larger number of data points per meter of track, producing high resolution coverage of the rail wear and track geometry of the tracks. In addition, the ORCA was able to operate fully across the entire span of the operation, compared to the GRAW which suffered from a malfunction in its right rail vertical wear measurements, resulting in the loss of over 200m of data between the 600 – 800m segment of the operation. For the 1.8km segment, the ORCA's vertical rail wear readings closely matched the GRAW's, with the excpetion of a

slight 0.7mm offset (**Figure 100**). A possible explanation for this offset might be due to the fact that the rails on the tracks were much shinier than those used for testing in both SUTD and Bishan Depot. Hence, some data was lost from the the rail profile scans, possibly resulting in less accurate results. However, this could be easily solved in future runs by increasing the exposure time of the 2D laser scanners to account for the shininess of the track. A a follow-up experiment was done to obtain the new exposure time of 2300us (previously 300us), detailed in **Annex 34**.

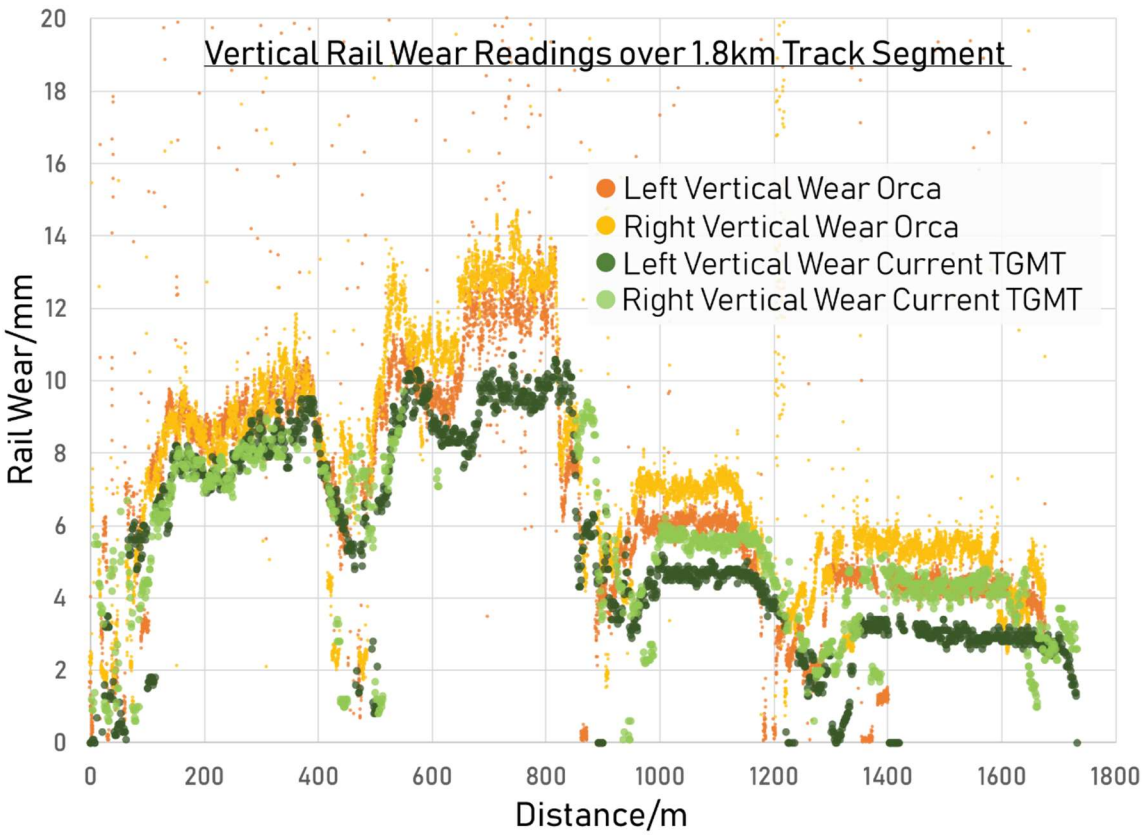

FIGURE 100. RAIL WEAR DATA COMPARISON BETWEEN THE ORCA AND THE GRAW ON BOTH THE LEFT AND RIGHT RAILS.

The results of both tests were largely positive given the limited testing opportunities and a comprehensive summary of the evaluated technical performance of the ORCA against SMRT's current TGMT can be found in (**Annex 35)**.

8 Project Documentation

Given the large scope of the project, and SMRT's intention to continue testing it in the future, a comprehensive set of documentation, listed in Table 27, was produced to ensure SMRT staff would be able to maintain, operate and construct the ORCA and ORCA Mini after the project was over. Cost calculations for both prototypes were also included in the construction manuals produced.

Document	Purpose
ORCA Circuit Schematics (details in **Annex 36**)	To illustrate how power is transmitted within the ORCA, along with the connections between different electrical components
ORCA Data Flow Diagram (details in **Annex 37**)	To illustrate how the ORCA's data is collected, processed and stored
ORCA Laser Rail Profile Trolley Maintenance Manual (details in **Annex 38**)	To instruct users on how to maintain the ORCA including the replacement dates of components and vendors to contact for replacement/repair
ORCA Laser Rail Profile Trolley Operation Manual (details in **Annex 39**)	To instruct users on how to operate the ORCA and carry out basic troubleshooting
ORCA Mini Technical Documentation (details in **Annex 40**)	To outline the construction and operation of the ORCA Mini
ORCA Construction Manual (details in **Annex 41** Orca Structural Construction Plans)	To outline the components and processes used to construct the ORCA

TABLE 27. LIST OF ALL DOCUMENTATION PRODUCED

9 Project Management

Effective project management was achieved by using a Gantt chart to allocate tasks across the group over a highly structured schedule, while an analysis of the possible administrative hurdles of the project was conducted to increase the success rate of the project. Lastly, the project budget was closely tracked using a Bill of Materials (BoM) to ensure that the project was completed within the allocated budget.

9.1 Task Allocation

Each aspect of the project, as detailed by the implementation strategy, was assigned two leads who ensured that development was smooth and on time (see **Table 28** below). Responsibilities were allocated based on how well a team member's skillset matched each aspect of the project.

Aspect	ORCA		ORCA Mini	
	Lead 1	Lead 2	Lead 1	Lead 2
Structural/ Mechanical	Lam Teng Foong	Nicholas Ng	Nicholas Ng	Chin Joo Ern
Power Systems	Chin Joo Ern	Nicholas Ng	Nicholas Ng	Chin Joo Ern
Sensor Integration	Lam Teng Foong	Toh Wei Qi	Toh Wei Qi	Chin Joo Ern
Network Architecture	Eric Teo	Toh Wei Qi	Toh Wei Qi	Lam Teng Foong
2D Profile Scanning	Eric Teo	Kevin Tan	Not Applicable	Not Applicable
User Interface	Kevin Tan	Eric Teo	Kevin Tan	Eric Teo

TABLE 28. TASK ALLOCATIONS FOR THIS PROJECT. EACH GROUP MEMBER LEADS AT LEAST ONE SUB-TASK.

9.2 Administrative Risks

Identification of administrative risks reduced the probability that any project delays may result from administrative failures. These risks typically stemmed from variables outside of our control. An administrative risk table was generated to identify such risks and we developed mitigative actions that reduced the severity and occurrence of such events**.** Practicing the mitigative actions allowed smooth progression of the project. **Figure 101** shows a few examples from the table while the full table can be found in **Annex 33**.

General Administrative Risks								
#	Administrative Action	Failure Mode	Effects	Causes	S	O	RPN	Mitigative Action
3	Purchase of structural materials	Purchase delayed due to delivery issues or out of stock	Delay in structural development schedule, possible failure to complete project on time	Vendor unreliability	9	3	27	Receive clearance to purchase sensors as early as possible and make the purchases immediately once clearance has been received. Always prioritize making the orders over tasks.
4	Test solutions in actual environment	Unable to gain access to actual track environment	Unable to fully confirm if the solution works in the operating environment	Due to SMRT's schedules, plans, safety considerations etc.	4	2	8	Check with SMRT one week in advance. If the testing is not allowed, proceed to begin constructing a more robust test environment using the tracks on campus
5	Make claims for purchases	Fail to claim due to receipt overdue or lost	Unable to utilize budget for project	Overlooked the receipt	5	1	5	Store receipts in folder once received
6	Store prototypes in a safe place	Unable to gain access to location to store prototypes	Losing or damaging the prototype	SUTD's administrative requirements/procedures	9	4	36	Check with Capstone Office in advance, if unsure, always store the prototype in a secure room

FIGURE 101. SNIPPET OF ADMINISTRATIVE RISK TABLE

9.3 Project Schedule

Summarizing all the activities into a single Gantt chart allowed us to track our progress across the weeks. The Gantt chart developed splits different segments of the project into specific tasks and allocates a specific number of hours per day to each of these tasks (see **Figure 101** for a snippet of the Gantt chart. For the full Gantt chart, refer to *Capstone9_ProjS08_Review-4_Gantt Chart.xls*). Across the span of the project, most of the work was completed on schedule.

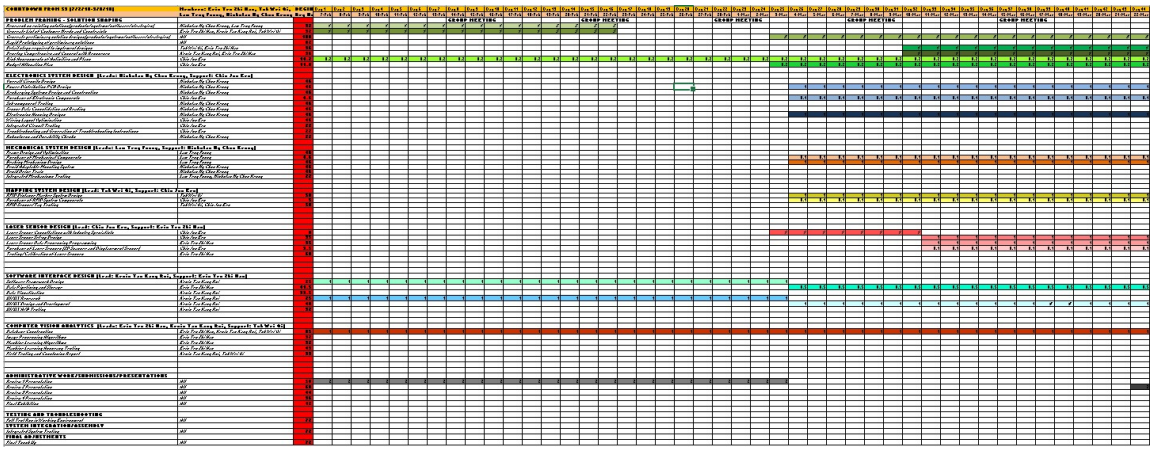

FIGURE 102. SNIPPET OF GANTT CHART

9.4 Project Budget

Close monitoring of the budget enabled the team to purchase components and submit claims efficiently. In addition to the items purchased, our Bill of Materials also tracks the status of claims to ensure that all members are remunerated. The full Bill of Materials can be found in **Annex 42**.

10 Conclusion

Creating a new system for mapping data in Singapore's rail network along with the design and construction of two functional prototypes with standards matching and even surpassing industrial standards was a challenge that few get to experience in their entire lives. Every member in the Team Railords shared the vision of completing a project that had operational functions and actual utility on a national level – and we achieved this goal by meeting all the needs of the stakeholders in this project (**Table 29**).

Primary Identified Needs (Ranked by priority)	Summary of Final Results
1) The solution can accurately map the data collected to chainage	Using the Tri-Modal Mapping system, data collected on the rails can now be mapped to a precision of 0.7m. Previously, the precision was subject to the performance of the encoder.
2) The solution is cost-effective	The project was completed with some budget remaining. The goal of creating an operational prototype at less than half the cost of the GRAW trolley was met.
3) The solution provides precise and relevant measurements (Track geometry and 2D rail profile)	The ORCA was able to collect all track geometry data, with higher performance in cant, twist and gradient measurements as compared to the GRAW trolley.
4) The solution can help SMRT's rail maintenance process transition from Schedule-Based Maintenance to Condition-Based Maintenance	The ORCA Mini was able to demonstrate the utility and precision of semi-autonomous navigation along tracks at reasonable speeds. This lays the path for high frequency, mass coverage of rail condition monitoring drones.
5) The solution is sustainable	Documentation provided for the ORCA and ORCA Mini is comprehensive and ensures that both prototypes can be operated, maintained and re-constructed without aid from the team if necessary.

TABLE 29. TABLE OF NEEDS AND HOW THEY WERE MET

However, there are several ways in which the execution of the project could have been improved, and the team has noted these areas for improvement (**Table 30**)

Improvements for Project Management and Execution	
Project Management Practice	**Recommended Changes to Practice**
Purchasing high-cost components from overseas manufacturers and assuming delivery date is as stated	Always assume delivery lead time is two times longer than stated by the manufacturer Withhold part of payment until component has been delivered
Arranging for multiple major test dates that require special preparation (nightwork on service tracks)	Continue planning for multiple major test dates especially if the results are critical for the assessment of the project Where possible, conduct the first major test once the team feels ready so that there may be time to arrange a second test
Project requires EPD students to construct frame and install sensors before ISTD students can begin working with proper data	It may have been possible to focus on one part of the EPD construction effort and complete that segment first so that the ISTD students in the group could begin work earlier.

TABLE 30. PROJECT MANAGEMENT IMPROVEMENT

Additionally**,** based on the results acquired from the tests on the SUTD rails, Bishan Depot rails and Tanah Merah – Expo rail segment, the team has highlighted several improvements which can be implemented on the ORCA to produce better results should SMRT use the ORCA in future operations (**Table 31**).

Operational Improvements for ORCA Prototype	
Area for Improvement	**Action Required**
Incomplete rail head scan profile on shiny rail surfaces	Increase exposure time of 2D scanners to 2300us instead of the current 300us
ORCA UI functionality reliant on Raspberry Pi WiFi status	Upload UI on tablet with ethernet port and use ethernet cables for data transmission between the tablet and ORCA
1D laser displacement sensor readings interfered with by guard rail	Shift the 1D laser displacement to a suitable position
ORCA vibrates violently when being transported across rough surfaces	Increase the wheel diameter of the ORCA

TABLE 31. ORCA IMPROVEMENT

At the point of completion of this report, SMRT has requested for a second test run in actual rail environments (to be arranged sometime after the team has graduated from SUTD), along with maintenance and operation manuals for the ORCA and ORCA Mini – thus indicating that the prototypes will continue to be used and developed. Railords has learnt much over the span of this project and is proud of their contribution to the rail transport system in Singapore. We would also like to take this chance to thank Professors Nagarajan, Zhang Yue, Bige and Cindy for their support over the course of this project.

11 References

1. Adrian,L. (2017, Nov 30). *Rail operators must inform commuters of delays over 10 minutes*. Retrieved from: http://www.straitstimes.com/singapore/transport/rail-operators-required-to-inform-commuters-of-delays-exceeding-10-minutes
2. Chen, Q. J. (2018, February 10). *A Railway Track Geometry Measuring Trolley System Sensors*, p. 1-26. Retrieved from: www.mdpi.com/1424-8220/18/2/538/pdf
3. Commuter satisfaction in public transport dips for first time in four years: PTC survey. (2018, February 13). Retrieved from: https://www.channelnewsasia.com/news/singapore/commuter-satisfaction-public-transport-dip-first-time-four-years-9954408
4. Gradinariu, T. (2015, July). *Key Cost Drivers in Railway Asset Management*. Retrieved from: https://www.unece.org/fileadmin/DAM/trans/doc/2018/wp5/UIC_Key_cost_drivers_in_RAM.pdf
5. Hellmers, H., Norrdine, A. Blankenbach, J. & Eichhorn, A. (2013). *An IMU/magnetometer-based Indoor positioning system using Kalman filtering*" International Conference on Indoor Positioning and Indoor Navigation, Montbeliard-Belfort, p. 1-9. doi: 10.1109/IPIN.2013.6817887
6. Jensen, A. C. (2007, May). Deming regression [MethComp package]. Retrieved from https://r-forge.r-project.org/scm/viewvc.php/*checkout*/pkg/vignettes/Deming.pdf?root=methcomp
7. Kazushi, M. (2016). *Prospects of "Smart Maintenance" Utilizing ICT*. Retrieved from: https://www.jreast.co.jp/e/development/tech/pdf_34/tec-34-05-08eng.pdf
8. Kurose, J. F., & Ross, K. W. (2017). *Computer networking: A top-down approach*. Harlow: Pearson Education.
9. Lela, L. (19 February 2018). Daily Express. *London train with 300 passengers derailed as clueless companies IGNORED track since 1994*. Retrieved from: https://www.express.co.uk/news/uk/921225/london-train-derailed-ignored-track-since-1994
10. Li, F., & Niebles, J. C. (2016). *Finding Features 2/2*. Lecture presented in Stanford University. Retrieved from http://vision.stanford.edu/teaching/cs131_fall1516/lectures/lecture7_DoG_SIFT_cs131.pdf
11. Lobo, A., Kadam, Shajahan, R. S., Malegam, K., Wagle, K. & Surve, S. (2014) *Localization and tracking of indoor mobile robot with beacons and dead reckoning sensors*, Electrical, Electronics and Computer Science (SCEECS), 2014 IEEE Students' Conference on, Bhopal, 2014, pp. 1-4. doi: 10.1109/SCEECS.2014.6804452
12. Maintenance is what keeps Singapore's rail network humming: Khaw. (2015, October 25). Retrieved from: https://www.channelnewsasia.com/news/singapore/maintenance-is-what-keeps-singapore-s-rail-network-humming-khaw-8222890
13. Performance of Rail Service Reliability. (2018, March 7). Retrieved from: https://www.lta.gov.sg/content/dam/ltaweb/corp/PublicTransport/files/Rail%20Service%20Reliability%20Performance_7.3.18.pdf
14. Roy. (2012, December 27). 2D curve matching in OpenCV [w/ code]. Retrieved from: http://www.morethantechnical.com/2012/12/27/2d-curve-matching-in-opencv-w-code/
15. RIFTEK. (2017). 2D laser scanner operation emulator. Minsk, Republic of Belarus. Retrieved from https://riftek.com/eng/support#19682
16. RIFTEK. (2017). Laser Scanners RF625 Series User manual. Minsk, Republic of Belarus: RIFTEK.
17. SMRT Corporation Ltd Annual Report 2016. *Twin Tracks to Performance and Growth*. (2016). Retrieved from: https://www.smrt.com.sg/Portals/0/InvestorRelations/Annual%20Report/2016/SMRT%20Annual%20Report%202016_LR.pdf
18. SMRT Rail Report 2017. (2017, April 25). Retrieved from http://blog.smrt.com.sg/smrt-rail-report-2017/
19. Waara, P. (2000*). Wear reduction performance of rail flange lubrication*, Division of Machine Elements, Department of Mechanical engineering, Lulea University of Technology, Lulea, Sweden. ISSN: 1402-1757;2000:60. Retrieved from: http://www.diva-portal.org/smash/get/diva2:999584/FULLTEXT01.pdf
20. Welford, B. (1962). Note on a Method for Calculating Corrected Sums of Squares and Products. Technometrics, 4(3), 419-420. doi:10.2307/1266577
21. World Bank, International Comparison Program Database. (2018). Retrieved from: https://data.worldbank.org/indicator/NY.GNP.MKTP.PP.CD

22. Yamur K. A. (2016). Journal of Modern Transportation. *Improvement of Railway Performance: A Study of Swedish Railway Infrastructure*. Retrieved from: https://link.springer.com/article/10.1007/s40534-015-0092-0
23. Yokoyama, A. (2015). The Fourth International Conference on Through-life Engineering Services. *Innovative changes for maintenance of railway by using ICT -To Achieve "Smart Maintenance"*. Retrieved from: https://ac.els-cdn.com/S2212827115008331/1-s2.0-S2212827115008331-main.pdf?_tid=33e86d4d-2924-4a26-827c-99472bd2e857&acdnat=1524073821_916c68bf33f0dc155447599c22954895
24. Yun, C. B. & Min, J. (2010, December 11). *Smart Sensing, Monitoring, and Damage Detection for Civil Infrastructures*. KSCE J. Civ. Eng. 2011, 15, p. 1–14. Retrieved from: https://link.springer.com/article/10.1007/s12205-011-0001-y
25. Holzman, D. C. (2010, January). Retrieved April 17, 2018, from https://www.ncbi.nlm.nih.gov/pmc/articles/PMC2831986/
26. Rawat, S. (2017, September 04). AB testing - The Complete Guide. Retrieved from https://vwo.com/ab-testing/
27. Nielsen, J. (1995). 10 usability heuristics for user interface design. *Nielsen Norman Group*, *1*(1).
28. UX Planet (2016, July 22). The Art of Minimalism in Mobile App UI Design – UX Planet. Retrieved April 17, 2018, from https://uxplanet.org/the-art-of-minimalism-in-mobile-app-ui-design-b21aa671dd7f

12 Appendix

Annex 1 Key Takeaways from Unstructured Interviews

TROLLEY CREW

"Dirt and grime often clog up the bearings which cause the encoder to slip ...some nights, we do not notice that the distance counter has stopped halfway through, causing us to lose half a night's worth of work."

- Shafiq (32), SMRT Nightworks Team

Identified Need: Accuracy of Mapping
Trolley's distance tracking capabilities unreliable

TROLLEY CREW

"The trolley is quite heavy and sometimes it is difficult to fit it through some of the doors (elevator, gantries, access points)... pushing the trolley on the track is easy."

- Aakav (26), SMRT Nightworks Team

Identified Need: Usability
Current trolley is bulky and hard to carry

TROLLEY CREW

-Difficult to accurately tag track measurements to position because chainage markers are unstandardized

- Low-light conditions make it difficult to see certain elements on the tracks

-Portability of rail maintenance devices can be improved so that it will be so tiring for the workers to move the trolley around. This also mitigates the possibility of damaging existing infrastructure when transporting the trolley to the tracks

-User interface for maintenance devices can be more intuitive

-Device should be able to signal if specific components have failed.

PATROL CREW

"Patrolmen are required to head down to different sectors of the track every night to manually look for defects... using torchlights... sometimes they can complete a sector (track between two stations) within 1.5hours and end their nightwork early"

-Voon Kakiong Senior Engineer, Permanent Way Engineering

Identified Need: **More effective identification of visual defects**
Difficult to all spot defects by eye under low lighting conditions. Perhaps automating this process can help?

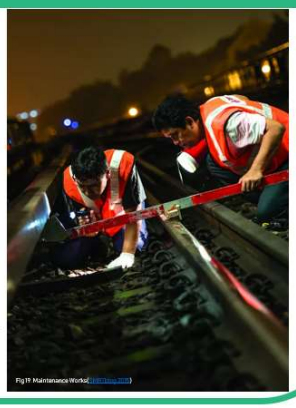

Fig 19: Maintenance Worker

Annex 2 Structured Interview Meeting Minutes

Item 1: Maintenance Cycle Improvements	
Discussion: Tie Xuan shared that a section of track is covered by visual inspection every 4-7 days. This is executed by patrolmen with torchlights who look for defects. A defect that is spotted is then recorded down on a form which is later submitted to the analyst back in the office the next morning. If a defect is immediately spotted and reported, it may be possible to take mitigative measures such as clamping. Advanced works such as rail replacement will not be possible due to the limited resources and track access available for the specific night. Nicholas asked if there were any additional benefits that could be brought about by immediate data analysis of track data. Tie Xuan responded that benefits will be marginal due to the limited engineering hours and preparation required before last minute maintenance works can be executed. Engineers can typically apply for late requests in the event a work is to be scheduled after the weekly scheduling session is over, but these too need to be filed several days in advance of the work.	**Presenter** **1. Ng Tie Xuan**
Decisions: Conduct research on different models of track maintenance in market analysis. Conduct research on application of predictive analytics to a identify defects before they have even be labelled and make a prediction of the approximate time period before the severity index of the defect will change.	

Action Plans: Nicholas is to carry out market analysis on different models of track maintenance being used by other railway systems and brief the team on his findings in one week's time. Kevin and Eric are to conduct research on the methods for live data analytics and possible methods for transmission of analysis to relevant parties.	Taskmaster(s)/ Deadline 1. Nicholas Ng / 23 Feb 2. Kevin Tan / 28 Apr
Item 2: Collection of Additional Data Types	
Discussion: When queried on the additional types of data that SMRT would value for its rail maintenance, Tie Xuan highlighted two types of information that has not been accurately collected and monitored. The first is rail welds which are found between two adjacent pieces of rail on the track. These typically have a silvery surface when new and protrude out slightly from the adjacent tracks. Identifying such defects would allow for effective rail replacement works since the start of the insertion point can now be tracked. The second data type is third rail sag which is monitored by a linear variable differential transformer (LVDT) installed on both sides of a train. Tie Xuan noted that while the current trains are able to get third rail sag readings by this method, the readings have been incorrect on many occasions resulting in the incorrect deployment of workers to fix a specific part segment of third rail. Joo Ern noted that the current intention to use a 2D laser profile scanner could possibly capture the position of a rail weld due to its slightly larger profile compared to the surrounding rail.	Presenter 1. Ng Tie Xuan
Decisions: The team is to further research the need and feasibility of collecting third rail data. There is a need to look into the possibilities of using 2D laser profile scanners for identifying welds.	
Action Plans: Teng Foong to determine feasibility of collecting third rail data based on research and surveying SMRT personnel. Identify possible methods of using 2D laser profile scanners for identifying welds.	Taskmaster(s)/ Deadline 1. Lam Teng Foong / 28 Feb 2. Joo Ern / 28 Feb

Item 2: Updates on SMRT's Maintenance Status	
Discussion: Ling Ken shared that while discussing the project with his colleagues at SMRT, there have been a few more requests highlighted by the trolley crew. This included slow transfer speed of data from the trolley to the thumbdrive once the work is completed. Additionally, for the data to be extracted, the entire trolley must be assembled, this prevents the trolley team from disassembling he trolley and extracting data at the same time, extending the duration of the work. The team noted that this was similar to what was observed during the nightwork attachments, and added that the reliability of the data transfer was another issue as it was observed that one trolley was unable to upload its data after the work was completed due to an error.	**Presenter** **1. Ling Ken**
Decisions: The team is to note that the data transfer speed and method are key considerations to focus on during the design of the prototype.	
Action Plans: Kevin and Eric to determine which methods and hardware would facilitate the fast transfer of data	**Taskmaster(s)/ Deadline** **1. Kevin and Eric / 28 Mar**

Item 3: Methods for Analyzing Data Types	
Discussion: Data analysis in SMRT is conducted daily on many different types of data. Most of the raw data collected is compiled by an engineer who will set thresholds. Data points which cross the thresholds will then be highlighted and further analyzed by the engineer who will raise a maintenance work request if the analysis suggests that there is a defect in the location. Nicholas asked if it would be beneficial for SMRT if predictive analytics was used to analyze the different data types and determine the possible date when the rail would require maintenance. Tie Xuan responded that while condition based monitoring is the goal of SMRT, the immediate benefits of such a function would be marginal due to the backlog of maintenance works and the often reactive and unpredictable nature of the work. Additionally, sometimes segments of data can go missing when the sensors from the monitoring device do not function. Tie Xuan also brought up the existence of the RailVision System which SMRT is currently using for the automatic detection of defects based on footage captured by passenger trains. The system is able to capture video footage of the top of railway tracks and sleepers during service hours, anomalous features are identified by the software. The RailVision has a resolution of 0.5m. The team noted that this was a semi-autonomous method of data analytics which may be improved with better data and feedback. The Asset Integrated Management System (AIMS) was another platform brought up by Tie Xuan. It is a project currently headed by Da Yao and Ivan who are looking at the construction of a platform which can map multiple types of data onto a single location. This allows for cross data analysis which could grant track monitoring procedures greater insight.	Presenter 1. Ng Tie Xuan 2. Nicholas Ng
Decisions: Preliminary study of predictive analytics to be conducted to determine feasibility. Determine methods for RailVision and AIMS to be enhanced.	

Item 3: Rail Profile Superpositioning and Reliability	
Discussion: Ling Ken highlighted that the rail profile generated in the solution must be superpositioned onto an existing template rail profile for comparison and analysis. He added that the data analyst for rail profiles (Kevin Gunawaran) have recently feedbacked that the rail profile generated by the GRAW is different from the rail wear data being reflected. This is problematic because the two data are supposed to correspond perfectly for a given distance data point (since the rail wear is derived from the rail profile).	Presenter 1. Ling Ken
Decisions: Team is to take note of the rail profile analysis process such that it generates rail wear values that correspond to the rail profile at a specific point.	
Action Plans: Joo Ern to work closely with Eric regarding the quality and reliability of the rail profile analysis algorithm.	Taskmaster(s)/ Deadline 1. Joo Ern and Eric/ 14 April

Item 4: Additional Trolley Upgrades	
Discussion: Ling Ken highlighted that the trolley's Human-Machine-Interface (HMI) must be idiot-proof and may not require a touch screen. He pointed out that the current GRAW trolley's interface utilized numerous buttons with graphics that guide the user intuitively on their function. The encoder on the trolley which is used for measuring distance may also function more effectively if the rail is cleaned before it contacts the rail. GATES has designed a unique wheel that is grime resistant so that it never slips on the rail, resulting in more accurate distance measurement results.	Presenter 1. Ling Ken
Decisions: Factor in other possibilities for improving the encoder's efficiency.	
Action Plans: Teng Foong and Nicholas to carry out supplementary research on potential ways to improve the reliability of encoders from a environment priming and material science perspective.	Taskmaster(s)/ Deadline 1. Teng Foong and Nicholas/ 14 April

Item 5: Update on Mapping System Constraint	
Discussion: Ling Ken highlighted the potential difficulty in setting up a mapping system in the actual track environment if it causes any potential changes to the environment. Joo Ern answered that the current RFID tagging solution does not need to be permanent as the team intends to use an adhesive based approach for attaching the tags onto the rail environment's surfaces, the team will also be removing all project materials form the track environment after each live trial. Ling Ken highlighted that this will make the paperwork much simpler.	Presenter 1. Joo Ern 2. Ling Ken
Decisions: Proceed with RFID mapping system operating procedure as planned.	
Action Plans: No plan required. Proceed as intended.	Taskmaster(s)/ Deadline

Annex 3 Evaluation of Existing Mapping Techniques

Defect Mapping Technologies	Description	Advantages	Disadvantages
Odometer	Measures the number of revolutions a wheel has turned, which can be used to calculate the distance travelled.	• Straightforward working principle. • Calculations required to get the distance travelled are simple. • Low in cost.	• Essentially a mechanical system and is prone to malfunction due to the accumulation of grime and dirt. • Error in readings accumulates significantly over long distances due to reasons such as wheel slippage.
Global Positioning System (GPS)	A form of GNSS (Global Navigation Satellite System) that uses signals transmitted from orbit satellites to pinpoint an object's location and velocity.	• No mechanical or moving parts. • High-end GPS systems can be fairly accurate, some with precisions of less than 0.2m.	• GPS signals cannot be received underground. • Not suitable for places with tall buildings, which might reflect the satellite signals, resulting in multipath error.
Inertial Measurement Units (IMUs)	An electronic device that uses a variety of accelerometers, gyroscopes, and sometimes magnetometers to measure the velocity and position of an object.	• No mechanical or moving parts. • Unlike GPS, works both inside tunnels and out in the open.	• Over long durations, IMU's accuracy in determining position suffers immensely due to integration drifting errors. Hence, they are often used with additional sensors to improve the accuracy of the readings.
Total Stations	An optical device that sends a laser beam to a prism and based on the time it takes the laser beam to be sent back, determine the position of the total station using triangulation (after several readings are made). In track geometry trolleys, either the total station or prism can be	• Extremely accurate, with a precision of up to 1mm.	• Requires stop-and-go measurements, which is extremely slow (0.15km/h). • In the configuration where the total station is mounted on the trolley, numerous prisms have to be installed along the track, which might be very costly.

	mounted onto the trolley while stationary prisms or total station respectively help anchor the readings.		• In the configuration where the prism is mounted onto the trolley, surveys can only be done in 70m stretches, where the prism is within the line of sight of the total station, limiting the range of the solution.
Aided Inertial Navigation System (Aided INS)	Measurements from an IMU are supplemented with an array of other measurements such as odometers, GNSS, an automated total station and sleeper recognizers.	• Accurate and fast at the same time. Aided INS system was able to map track geometry readings to a position up to 1.4mm in accuracy at a decent speed of 2-3km/h.	• Requires "control points" with prisms to be built every 60m on both sides of the track to help with calibration of total stations along the track, which might not be very feasible for long distances. • Setup is highly costly (Estimated cost is more than 40000USD) which might be equally or more expensive than the rail geometry sensors on the trolley itself.

Annex 4 Further Case Study: Complex Logistics

There were many research papers dealing with the complexity of logistics in rail maintenance, each highlighting different reasons and solutions for the complexity. From our studies, we have concluded that logistical difficulty in rail maintenance stems from the lengthy process required to decide. This is partially illustrated in the flowchart shown in **Figure 103**.

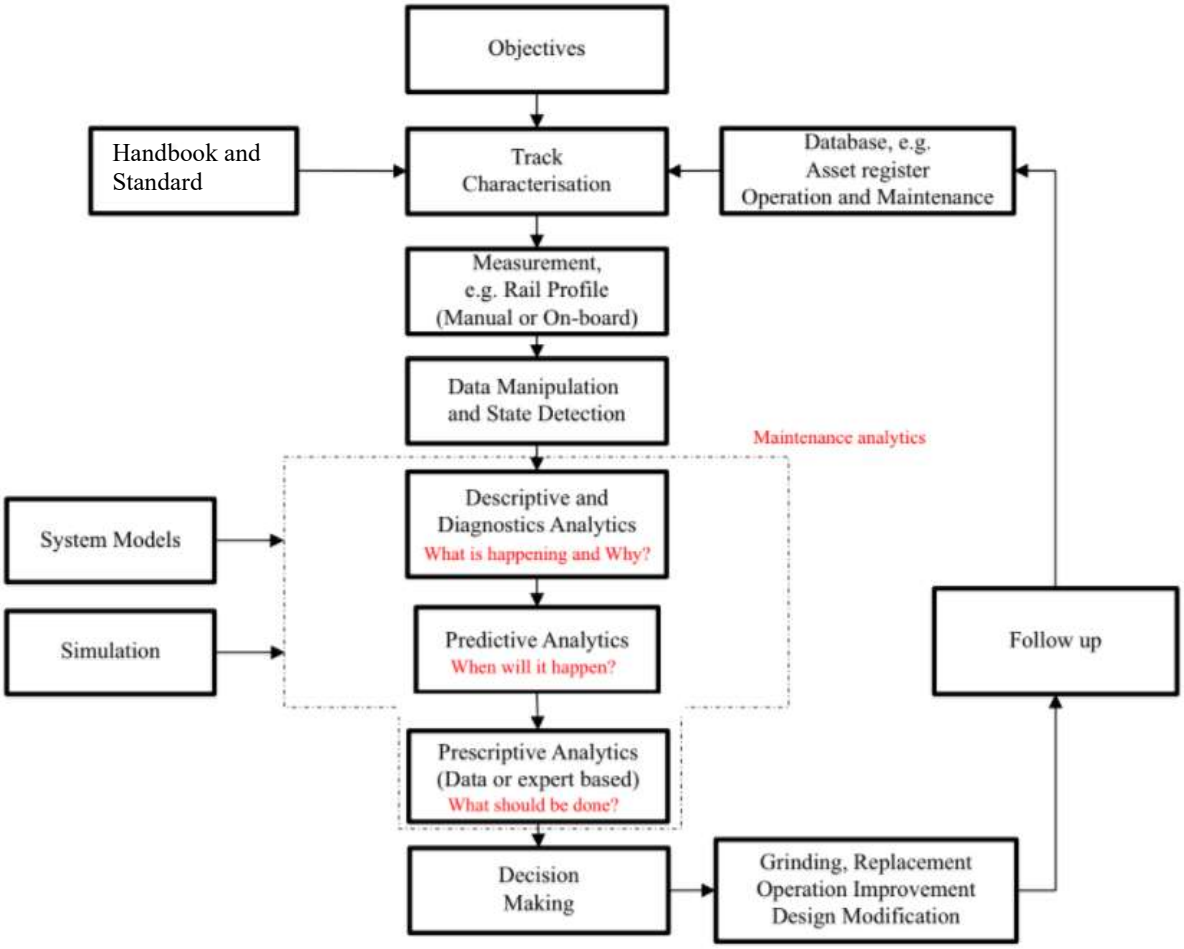

FIGURE 103. SHOWS THE LOGISTICAL DIFFICULTY IN PLANNING FOR RAIL MAINTENANCE WORKS.[8]

Before a decision can be made, many parties need to be consulted for data and analysis. following which, the maintenance crew needs to be contacted to execute the rail maintenance work. The overall flow of the chart in terms of the data management spanning from the 'Objectives' to 'Decision Making' (as seen in **Figure 103**) is comprehensive, however, in reality, the process between the maintenance crew's receival of the task is much more complex than just 'Follow up'[9]. As there are an enormous number of works that need to be conducted along different stretches of track at various

[8] Image extracted from "Maintenance analytics for railway infrastructure decision support", Journal of Quality in Maintenance Engineering, Vol. 23 Issue:3, pp.310-325, https://doi.org/10.1108/JQME-11-2016-0059

[9] Stephen Mayowa Famurewa, Liangwei Zhang, Matthias Asplund, (2017) "Maintenance analytics for railway infrastructure decision support", Journal of Quality in Maintenance Engineering, Vol. 23 Issue: 3, pp.310-325, https://doi.org/10.1108/JQME-11-2016-0059

points in time, conflicts between different works that need to occur at the same time and place are commonplace. Additionally, because contractors are involved in a large range of rail engineering works, the need to factor in the contractual agreements which govern allowable maintenance times also comes into play. Most railway operators resolve this problem by creating a maintenance window (a planned pre-organisation of train services)[10]. This maintenance window is then split across different rail maintenance crews to ensure track possession for prescribed infrastructure works do not clash[11]. Furthermore, maintenance activities themselves are never definite, and due to the varying times required to complete each task, there is always the possibility that a maintenance work which overshot in its planned duration causes a train service delay[12]. These logistical risks are typically mitigated by the planning executed by experienced railway schedulers, but as railway maintenance becomes more advanced, the number of considerations to be factored will only become greater, hence most of the forefront research in optimizing the scheduling of railway maintenance works deals with modelling and generating algorithms that optimize the schedule based on comprehensive list of parameters such as the expected risks and likelihood of a delay for each maintenance activity, and assigns the task a session to conduct the maintenance work accordingly[13].

In summary, as Tomas Lidénto briefly covers in his overview of the challenges in railway difficulty, in order to deliver quality rail services, maintenance resources must be segmented and allocated in an efficient way. In SMRT's context this involves the coordination of resources across different maintenance divisions and depot operators – each handling sub-sections of the entire rail maintenance regime in Singapore.

Annex 5 Comprehensive List of Needs

Stakeholder	Priority	Need
Trolley Crew	***	Accurately tag track measurements to position
	**	Can be set up and used in low-light conditions
	*	Portability
	*	Does not damage existing infrastructure during transport to the tracks
	*	Mapping integrates with measurement systems

[10] Higgins, A. and Ferreira, L. and Lake, M. (1999) Scheduling rail track maintenance to minimise overall delays. In Proceedings The 14th International Symposium on Transportation and Traffic Theory, Jerusalem, Israel. Retrieved from: https://eprints.qut.edu.au/2531/1/2531.pdf

[11] Griffiths, B. (1991) Implementation of a Maintenance Window Programme in an Operating Suburban Network, Preprints of the 1991 International Heavy Haul Workshop, International Heavy Haul Association, Vancouver, Canada, pp.195-202.

[12] Ferreira, L. and Higgins, A. (1996). Modelling reliability of train arrival times. Journal of Transportation Engineering, American Society Civil Engineers (ASCE), 122 (6),414-420

[13] Peter Söderholm, Terje Nilsen, (2017) "Systematic risk-analysis to support a living maintenance programme for railway infrastructure", Journal of Quality in Maintenance Engineering, Vol. 23 Issue: 3, pp.326-340, https://doi.org/10.1108/JQME-09-2016-0042

	*	Intuitive user interface
	*	Informs users in the event of component failure
Repair team & Multi-Function Vehicle	***	Rediscover pinpointed faults
Data analyst	***	Accurately tag track measurements to position
	***	Suitable data accuracy and resolution
	**	Reliable data for predictive modeling
	**	Additional capability to measure power rail sag
	**	More frequent monitoring of track parameters
	*	Algorithms for more accurate fault detection
	*	Detect weld points on the track to aid replacement works
		Collects visual data more frequently than patrol
Scheduler	***	Reduce delays in repair work schedule (Possibly due to inability to locate faults)
		Identify visible anomalies with less manpower
Upper management	***	Measure track geometry and rail profile at low cost
	***	Reduce delays in repair work
	**	Comparable to the single GRAW trolley used by SMRT
	**	Survives heavy use and wet weather operation
	**	Easy to calibrate and maintain in-house
	*	Well-documented design
	*	Capability to predict faults before they occur
	*	Components are accessible for maintenance and calibration
	*	Components are readily available in the market
Public	***	Increase reliability of commute while maintaining affordability of transport

Note: 0* priority needs are considered outside the scope of the project and not considered.

Detailed breakdown of Primary needs and rationale for ranking:

1. The solution can accurately map the data collected to chainage		
Priority	**Need**	**Reason**
***	Solution enables inspection crew to accurately tag track measurements to position	All maintenance and monitoring works are dependent on accurate mapping of data to chainage (position along track). Critical to maintenance works.
***	Solution helps the maintenance crew to rediscover pinpointed faults	
***	Solution reduces delays in repair work schedule caused by inability to locate faults	This is the goal of accurately mapping data. Critical for stakeholders. If not met, maintenance is significantly impacted.
*	The solution's mapping system integrates easily with the measurement sensors	Integration moderately improves accuracy of mapping, mostly improves convenience.

2. The solution is cost-effective		
Priority	**Need**	**Reason**
***	Solution provides measurements for track geometry and rail profile at low cost.	High cost is a significant impediment to acquiring more TGMT trolleys or using alternative solutions. Needed to better support maintenance works.
***	Solution increases reliability of commute while maintaining affordability of transport	This is a core goal of SMRT / a railway operator. Extremely important to stakeholders.

3. The solution provides precise and relevant measurements		
Priority	**Need**	**Reason**
***	The solution provides data at an accuracy and resolution suitable for fault identification	Necessary to find faults. If not met, no faults can be identified for maintenance.
***	The solution is comparable to the single GRAW trolley currently used by SMRT	SMRT's requirement is to supplement existing assets owned by SMRT. Critical to stakeholders.
*	The solution has data analysis algorithms that improves accuracy of fault identification	Current data analysis is acceptable even if need is not met.

4. The solution can help SMRT's rail maintenance process transition from SBM to CBM		
Priority	**Need**	**Reason**
**	Solution provides source of reliable data for predictive modeling	Important for improving efficiency of maintenance. Allows solution to act as a basis for future work to build on.
**	Solution allows data analysts to collect data more frequently	

*	Solution provides SMRT with the capability to predict faults before they occur	Future goal, collection of data is more important at this point in time.

5. The solution is sustainable		
Priority	**Need**	**Reason**
**	The solution's devices are easy to calibrate and maintain in-house.	Reduces disruption to surveying and maintenance works, and a new benefit for TGMTs. However, not critical importance, as having backup devices is expected to offset this.
**	The solution is durable and rugged.	
*	The solution has a well-documented design	While this helps SMRT to independently support the solution (e.g. produce more devices, add supplementary solutions), it is possible for engineers to understand from design itself, thus low consequences if not met.
*	The solution's components are accessible for maintenance and calibration	Mostly a convenience feature. Worst case scenario is trolley has to be completely dismantled and put back together.
*	The solution's components are readily available in the market	This allows easier repair of components. However, substitute components may be possible, thus low importance.

6. The solution detects more track features		
Priority	**Need**	**Reason**
**	Solution provides the capability to measure third-rail (power rail) sag	Currently there is no automated means to measure this fault at all, thus it is a novel and valuable feature. However, this is an extra feature with lower importance to stakeholders.
*	Solution detects weld points in the track to aid track replacement works	A novel means to enable more efficient maintenance works. However, this is another extra feature with lower importance to stakeholders. This is also less valuable than third-rail sag.

7. The solution is easy to set up and use		
Priority	**Need**	**Reason**
*	The solution's devices are portable	Only marginally affects ability to do maintenance when improved beyond the constraints. Low value to stakeholders as minor inconveniences can be tolerated.
*	The solution does not damage existing assets and infrastructure during transport to the tracks	
*	The solution has intuitive user interface	Low consequences if not met as need can be mitigated by detailed instructions on how to use solution.
*	The solution informs users in the event of a failure of a component	Useful to prevent wasted efforts, but can be mitigated by diligence of inspection crew.

*	The solution's devices can be set up and used in low-light conditions	Valuable to stakeholders, but can be mitigated by use of torchlights.

Annex 6 Details of Constraints

1. Functionality & Performance	
Constraint	**Details**
Type of track parameters measured	Both track geometry and worn rail profile must be measured in the proposed solution (supplement the existing GRAW Trolley, as requested by SMRT)
Sensor precision	Track geometry measurements precision must match that of the GRAW Trolley (0.2mm)
Accurately and reliably map faults	Faults identified by the solution must be found within ±0.7m from reported location
Operation Duration	The solution must complete inspection works within engineering hours (limited to 3-4 hours per night)
	The battery must last for at least 5 hours

2. Health & Safety	
Constraint	**Details**
Risk to employees and hired external workers	Usage of the solution must adhere to the Code of Practice for Manual Handling in the Workplace Safety and Health Act
	The solution has no sharp edges
	All electronic components well insulated
	The solution is ergonomic and prolonged use should not damage health

3. Legal Constraints	
Constraint	**Details**
Licensing	Software must have licenses that allow commercial use (E.g. CrackIt does not allow commercial use[14], SIFT is patented[15].)

4. Ruggedness constraints

[14] CrackIt is a crack detection library, it does not allow commercial use. Source: H. Oliveira and P. L. Correia, "CrackIT - An image processing toolbox for crack detection and characterization," 2014 IEEE International Conference on Image Processing (ICIP), Paris, 2014, pp. 798-802. doi: 10.1109/ICIP.2014.7025160

[15] SIFT is a keypoint detection algorithm for image alignment and related tasks. Source: Lowe, D. G. (2000). *U.S. Patent No. US6711293B1*. Washington, DC: U.S. Patent and Trademark Office.

Constraint	Details
Weather-proofing	Minimum IP rating of IP65, water-resistant and dust-proof
Shock survivability	The sensors on inspection device(s) must have a shock survivability rating of more than 5000g
	Devices installed on the track itself must be vibration resistant due to continuous vibration from running trains

5. Economic Constraints	
Constraint	**Details**
Pricing of components	Industrial-standard sensors are expensive. (E.g. 2D laser profile sensors costs $7000-$30000 each.)
Cost-effectiveness	Manufacturing cost of our solution's track inspection device must be less than $35,000.
	Cost of maintenance of our solution's track inspection device must be less than $3000/year.

6. Communication Constraints	
Constraint	**Details**
Communication protocols	The communication protocols of the sensors must be compatible with the user application (e.g. TCP, C SDK, Serial baud rate)
RFID Frequency	RFID frequency must fall within 866 - 869 MHz and 920 - 925 MHz as regulated by Info-communications Media Development Authority of Singapore (IMDA)

7. Environment constraints	
Constraint	**Details**
Pollution	Must not have emissions that pollute environment
Noise pollution	Must meet noise pollution regulations for night time (55db in residential areas)
Usage environment	Operable in underground tunnels, which are confined spaces
	Operable under limited lighting available at night

8. Usability Constraints	
Constraint	**Details**
Portability	Devices in our solution must not exceed the weight of 25kg (carried by at most 2 personnel)
	The devices in our solution must be carried through 2040mm x 820mm doorways

User Interface	User interface must be operable with only touch input (Current track inspection devices only allow touch input)
Data output	Data collected must be exported in standardized format (i.e. .csv file format)

9. Prototyping & Testing Constraints	
Constraint	**Details**
Limited access to test track	Development must be able to account for limited ability to do testing. **Mitigation** - Built a mock test track in school **Limitation of mitigation** - Mock track can only test basic measurements of rail profile and track geometry
Small database of track faults	Development must take into account technical limitation in training machine learning with limited database of track faults.

Annex 7 Raw Morphological Chart

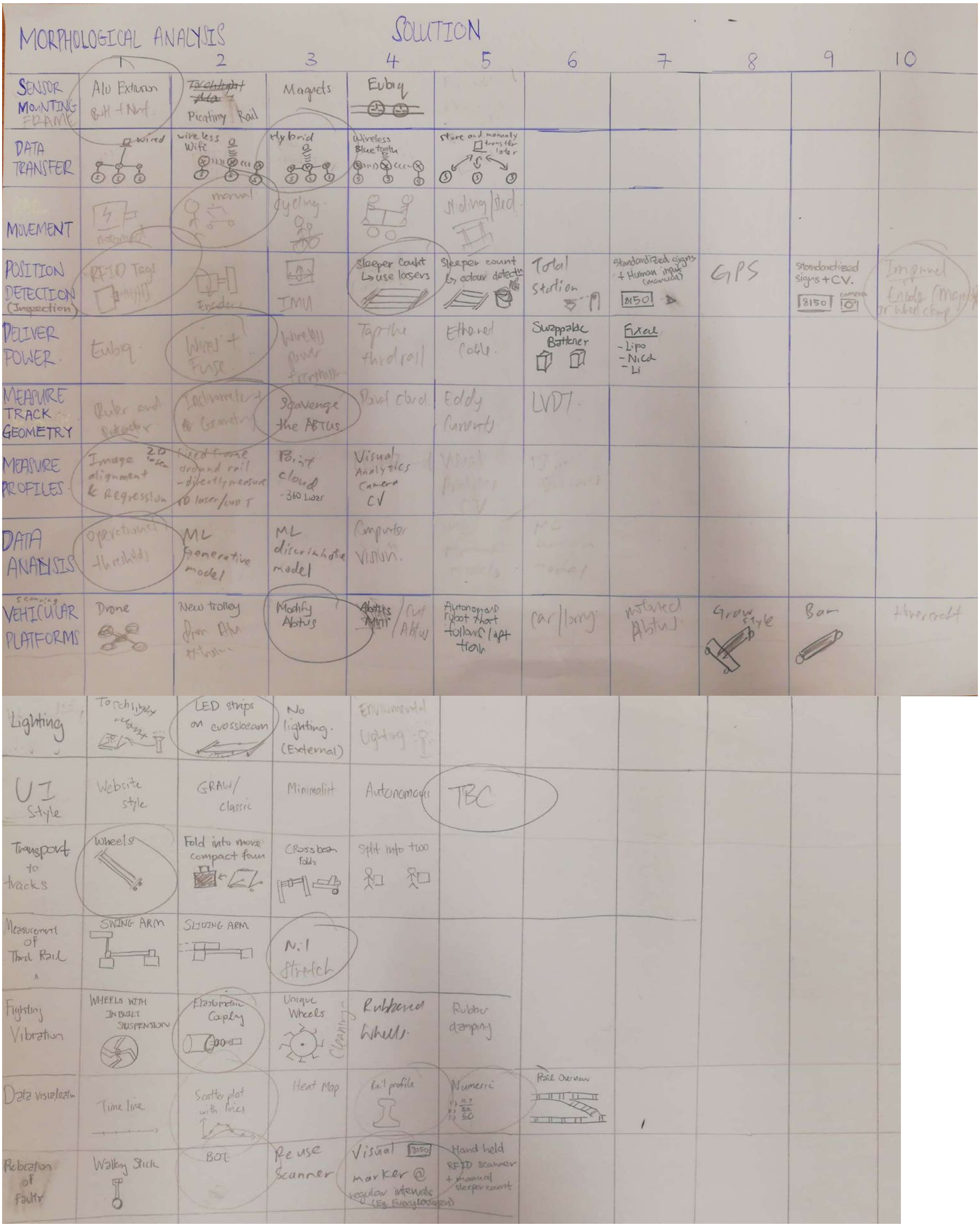

Annex 8 Softcopy Morphological Chart

MORPHOLOGICL ANALYSIS	SOLUTIONS									
Features	1	2	3	4	5	6	7	8	9	10
Sensor Mounting Frame	Aluminium Extrusion	Picatinny Rail	Magnetic Mounts	Eubiq						
Data Transfer	Wired	WiFi	Hybrid (Wired + Wireless)	Bluetooth	Manual Entry					
Movement	Motorized	Manual	Cycling Mechanism	Hand Car Mechanism	Sled					
Position Detection	RFID	Encoder	Inertia Measurement Unit	Laser Counting Sleepers	Color Detection + Sleepers	Total Stations	Standardized Signs	GPS		
Deliver Power	Eubiq	Wires with Fuses	Wireless Power Transmission	Third Rail	Ethernet Cables (Data + Power)	Swappable Batteries	Batteries (Li, NiH, NiMH, Pb)	High Power Capacitors		
Measurable Track Geometry	Ruler + Protractor	Inclinometers + Geometry	ABTUS	LIDAR Point Cloud	Eddy Current Proximity Sensor	Linear Voltage Differential Transformer				
Measure Profiles	2D Laser Scanner	Rotating 1D Laser Scanner	LIDAR Point Cloud	Computer Vision Analytics						
Data Analysis	Operational Thresholds	Machine Learning (Generative Model)	Machine Learning Discriminative Model	Computer Vision Analytics						
Vehicular Platforms	Unmanned Aerial Vehicle	Aluninium Frame Trolley	Modified ABTUS	Optimized ABTUS	Autonomous Rail Carriage	Car/Lorry	Fixed-Frame Trolley	Beam with Wheels	Hovercraft	
Lighting	Mounted Torchlight	LED Strips	No Lighting	Environmental Lighting						
UI Style	Website Style	GRAW Classic	Minimalist User Interface	Autonomous						
Transport to Tracks	Wheels	Compact Case	Foldable	Disassembled and Transported						
Measuremment of Third Rail	Swinging Arm Mechanism	Sliding Arm Mechanism								
Vibration Dampening	Wheel with in-built suspension	Elastomeric Coupling	Cleaning Wheels	Rubber Wheels						
Data Visualization	Timeline	Scatter Plot with Line	Heat Map	Rail Profile	Numeric	Rail Overview				
Relobation of Fault	Walking Stick Distance Counter	Robot on Rails	Re-use RFID Scanner	Visual Marker at Regular Intervals	Hand-held RFID Scanner + Manual Sleeper Counting	Sleeper Counting with Laser Displacement Sensor				

Annex 9 Qualitatively Analyzed Morphological Chart

MORPHOLOGICAL ANALYSIS	SOLUTIONS					
Features	1	2	3	4	5	6
Sensor Mounting Frame	 **Aluminium Extrusion**	 **Picatinny Rail**	 **Magnetic Mounts**	 **Eubig**		
	Strong Multi-Dimensional Modularity Low-cost (+++)	Strong Linear Modularity High-cost (++)	Weak Multi-Dimensional Modularitty Low-cost (++)	Weak Linear Modularity Supplies Power Medium-cost (+)		
Data Transfer	 **Wired**	 **WiFi**	 **Hybrid (Wired + Wireless)**	 **Bluetooth**	 **Manual Entry**	
	Low-cost Reliable Physical Link Highest speed (+++)	Medium-cost Less Reliable Wireless Link Requires Power Medium speed (+++)	Medium-cost Balanced Reliability Requires Power Medium speed (++++)	Medium-cost Less Reliable Wireless Link Requires less power Low speed (++)	Manual Poor speed Low reliability (+)	
Movement	 **Motorized**	 **Manual**	 **Cycling Mechanism**	 **Hand Car Mechanism**	 **Sled**	
	Highest speed Electric power Heat generated Possible failure Heavy Battery/Fuel Noisy (++)	Low speed Manual Reliable (+++)	Medium-speed Manual Increased failure points (++)	Medium-speed Manual Increased failure points (++)	Low speed High friction Noisy Stable Reliable (+)	
Position Detection	 **RFID**	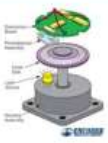 **Encoder**	 **Inertia Measurement Unit**	 **Sleeper counting**	 **Color Detection + Sleepers**	 **Total Stations**	 **Standardized Signs**	 **GPS**
	EM-Wave Obstacle-proof Requires power High range High success rate Accurate positioning (+++)	Physical contact Obstacle-prone Requires less power Accumulate dirt Accumulates error Poor positioning (+++)	Inertia based Obstacle-proof Affixed to mass Accumulate error Based on acceleration (++)	Line-of-sight Obstacle prone High power consumption Up to 70cm resolution Measures distance, not position High-cost (+++)	Line-of-sight Obstacle prone Low power consumption Up to 70cm resolution Measures distance, and position Low-cost (+++)	Line-of-sight Obstacle resistant Low power consumption Up to mm resolution Measures distance, and position Extremely high-cost (+)	Line-of-sight Obstacle resistant cm resolution Measures position Low-cost (+)	Satellite connection Open-air High range m resolution Measures position Requires power Medium cost (-)
Deliver Power	 **Eubig**	 **Wires with Fuses**	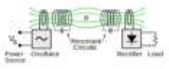 **Wireless Power Transmission**	 **Third Rail**	 **Ethernet Cables (Data + Power)**			
	Inflexible Fast connection Efficient Physical linear transmission (+)	Flexible Safe Potentially fast connection Efficient Multi-dimensional transmission (+++)	Flexible Potentially unsafe Inefficient Low power transmission (+)	Inflexible Unsafe High voltage High power transmission Inaccessible (-)	Flexible Safe Potentially fast connection Efficient Transmit data (+++)			
Measure Track Geometry	 **Ruler + Protractor**	 **Inclinometers + Geometry**	 **ABTUS**	 **LIDAR Point Cloud**	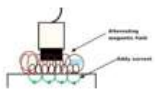 **Eddy Current Proximity Sensor**	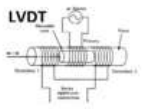 **Linear Voltage Differential Transformer**		
	Inaccurate Slow Labour intensive Low-cost Contact required (+)	Moderately accurate Fast Potentially automatic Low-cost Contact required Angles only (++)	Accurate Fast Low skill labour Available in market High-cost Contact required Angles and distance (++++)	Inaccurate High processing power required Potentially automatic High power consumption Multi-function High-cost Contactless (+)	Inaccurate Medium processing power required Low cost Contactless Distance only (+)	Accurate Low processing power Low cost Contact required Distance only (+)		
Measure Profiles	 **2D Laser Scanner**	 **Rotating 1D Laser Scanner**	 **LIDAR Point Cloud**	 **Computer Vision Analytics**		
	High-cost Accurate profile High power consumption Single point Medium processing power required (++++)	Low-cost Less accurate profile Medium power consumption Possible mechanical failure from rotation Mesh of points Low processing power (+++)	Very high-cost Less accurate profile High power consumption High processing power required (+)	Low-cost Very poor accuracy Medium power consumption Very high processing power required (+)		
Data Analysis	 **Operational Thresholds**	 **Machine Learning (Generative Model)**	 **Machine Learning Discriminative Model**	 **Computer Vision Analytics**		
	Fast analysis Easily implemented Distinct divisions Currently applied by SMRT (+++)	Medium speed analysis Requires accurate data Large database required (++)	Medium speed analysis Requires accurate data Large database required (++)	Slow analysis Complex algorithms Requires fine tuning Requires accurate data Requires human confirmation SMRT already has RailVision (-)		

Vehicular Platforms	 **Unmanned Aerial Vehicle**	 **Aluminium Frame Trolley**	 **2 Tier-Modified ABTUS**	 **Optimized ABTUS**	 **Autonomous Rail Carriage**	 **Car/Lorry**	 **Fixed-Frame Trolley**	 **Beam with Wheels**	 **Hovercraft**
	Aerial Short battery life Small payload Small surface for development Fast movement Hard to control Prone to crashes High-cost **(- -)**	Grounded Battery life easily extended Large payload Large volume for development Human speed movement Rugged Low cost Lighter than ABTUS Foldable+Dismantled **(++++)**	Grounded Battery life easily extended Large payload Large volume for development Human speed movement Rugged Re-use given frame Heavier than ABTUS Foldable+Dismantled **(++++)**	Grounded Battery life easily extended Large payload Large volume for development Human speed movement Rugged Modify given frame Lighter than ABTUS **(+++)**	Grounded Motorized Large batteries and motors High-speed Rugged High-cost Dangerous to test Large volume for development **(+++)**	Grounded Purchasable High speed Not suited for terrain Large volume for development High-cost Rugged Carries personnel **(+)**	Grounded Battery life easily extended Large payload Large volume for development Human speed movement Rugged Fixed shape and volume **(+++)**	Grounded Battery life easily extended Large payload Medium volume for development Human speed movement Rugged Fixed shape and volume Unbalanced Much lighter than ABTUS **(+)**	Hovering High power consumption Prone to collision Avoiods rail terrain Difficult to position sensors Technology not ready High speed Dangerous on viaduct **(- - -)**
Lighting	 **Mounted Torchlight**	 **LED Strips**	 **No Lighting**	 **Environmental Lighting**					
	Fixed positions Directed beams Low-cost Low power consumption **(+++)**	General lighting Fixed onto frame Cannot be directed Low power consumption **(+++)**	Users are currently required to bring torchlights Status quo **(O)**	High-cost Current segments of track lit Requires existing power grid Alters rail infrastructure **(+)**					
UI Style	 **Website Style**	 **GRAW Classic**	 **Minimalist User Interface**	 **Autonomous**					
	Scroll possibly required Layout concentrated on single page Familiar to general user General features **(++)**	Designed specifically for rail geometry and rail head wear Physically labelled buttons Limited information displayed Physical keypad at side **(++)**	Minimal buttons Limited interaction Focus on key information User not expected to troubleshoot Quick to learn **(+++)**	Displays information for remote monitoring and control Back-end system status and processes accessible **(++)**					
Transport to Tracks	 **Wheels**	 **Compact Case**	 **Foldable**	 **Disassembled and Transported**					
	Useful on flat surfaces Cannot handle stairs Low-cost One arm required Trolley exposed to surroundings **(++++)**	Useful on flat surfaces Protect components from surroundings Good for storage Good for loading and unloading Loose components captured **(+++)**	Good for storage May need to split load Possible mechanical weakness **(+)**	Generates loose parts Increases compactness Easy load splitting Reassembly/disassembly takes time **(-)**					
Measuremment of Third Rail	 **Swinging Arm Mechanism**	 **Sliding Arm Mechanism**							
	Requires clearance to deploy Hinge prone to failure Mechanism to fix arm in place required **(++)**	Requires force to overcome sliding friction May jam if not well lubricated **(+++)**							
Vibration Dampening	 **Wheel with in-built suspension**	 **Elastomeric Coupling**	 **Cleaning Wheels with Suspension**	 **Rubber Wheels**					
	Suspension inherent to wheel Requires testing with different types of wheels May cause change in sensor readings Suspension changes over time **(+++)**	Protects the encoder Enhances readings if rough surfaces common Protects rigid components in transmission mechanism Needs to be replaced on schedule **(+++)**	Cleans the track as the trolley moves Supports better encoder function **(++++)**	Slight suspension inherent to wheel Needs to be replaced on schedule Worn wheels will affect sensor readings **(+)**					
Data Visualization	 **Timeline**	 **Scatter Plot with Line**	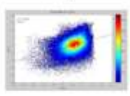 **Heat Map**	 **Rail Profile**	 **Numeric**	 **Rail Overview**			
	Shows data over time Highlights key data Switch between timelines for different data **(+++)**	Show data grouping Highlights frequency of different types of data Shows trends when compared to previous data sampling **(++)**	Shows the occurences of data based on color correlating to intensity Easy visualization of data Good for identifying problematic regions **(+)**	Used for rail head wear Required for analysis of rail profile Collected rail profiles eventually need to be mapped onto this UIC 60 Rail type **(+++)**	Good form for computer analytics Most likely the raw data Exact representation of physical state **(-)**	Good for identifying problematic areas over entire network Poor representation of specific faults along track **(++)**			
Relobation of Fault	 **Walking Stick Distance Counter**	 **Robot on Rails**	 **Re-use RFID Scanner**	 **Standardized Visual Marker at Regular Intervals**	 **Hand-held RFID Scanner + Manual Sleeper Counting**	 **Sleeper Counting with Laser Displacement Sensor**			
	Manual Lightweight Possible slippage Batteries Personal display No external reference Low cost Purchasable **(+++)**	Automatic Shared display Hands free Reference to mapping system High cost Position update same as maintenance device **(++)**	Manual Reference to mapping system Medium cost Position update based on frequency of RFID tags Power required for RFID scanner **(+)**	Manual Position update based on frequency of marker Limited potential for autonomous development May be confused with existing markers **(+)**	Manual Susceptible to human error Similar to referring to chainage markers **(- -)**	Automatic No external reference Maximum resolution = 70cm Possible skipping of sleepers due to additional elements on track **(+)**			
Power	 **Swappable Batteries**	 **Batteries (Li)**	 **High Power Capacitors**	 **Batteries (NiMH)**	 **Batteries (Pb)**				
	Efficient power source Extended battery life Quick replacement **(++)**	Higher power density Flammable Dangerous Specialized chargers required **(++)**	Developing power source Limited battery life Large volume **(-)**	High power density Less flammable Less dangerous Speccizlized charger required **(+++)**	Heavy Low power density Bulky **(+)**				

Annex 10 All Concept Sketches

Eric's Sketches

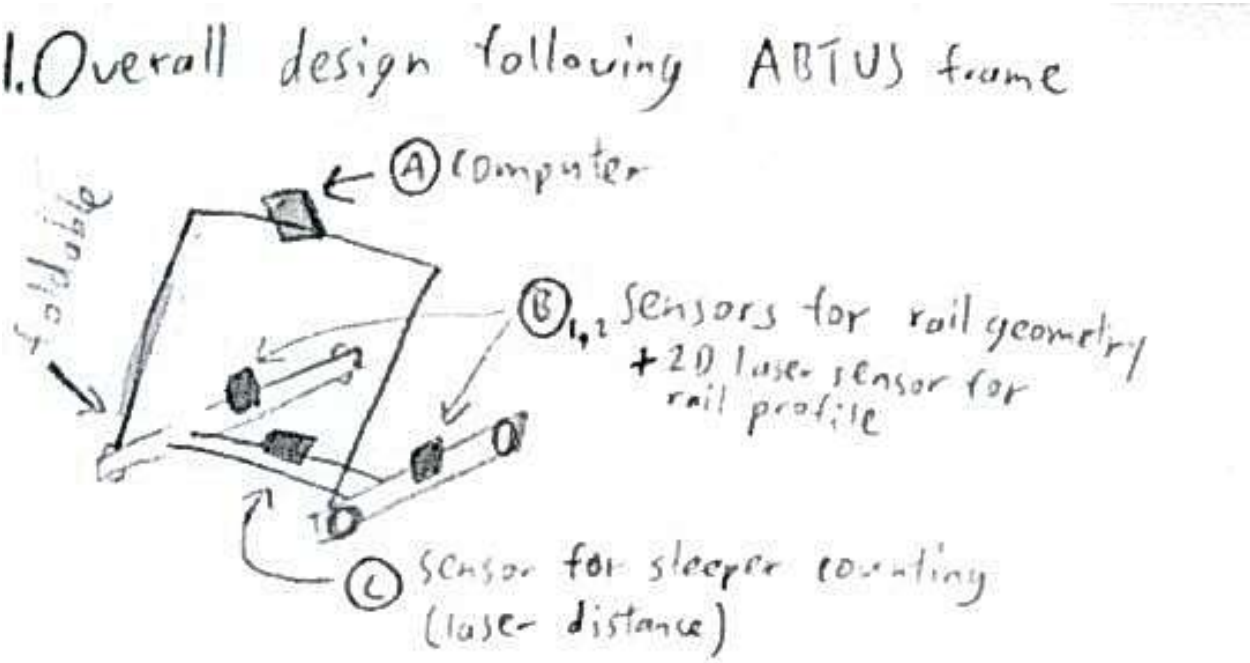

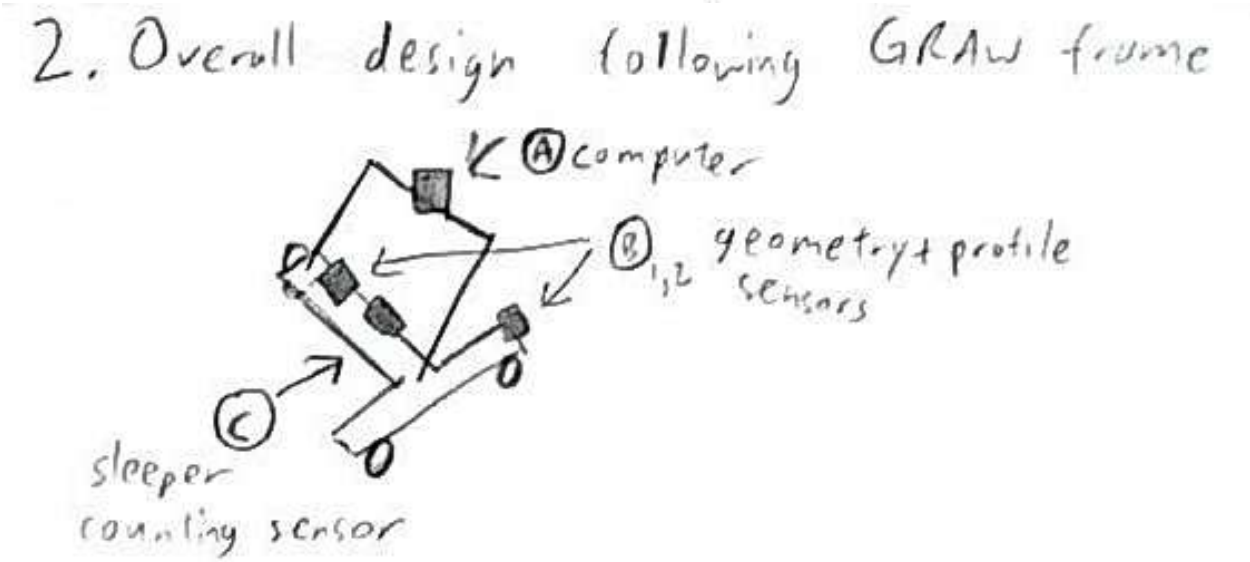

SKETCH 1 AND SKETCH 2 BY ERIC SHOWING THE POSSIBLE LAYOUT OF SENSORS ON DIFFERENT PROTOTYPING FRAMES

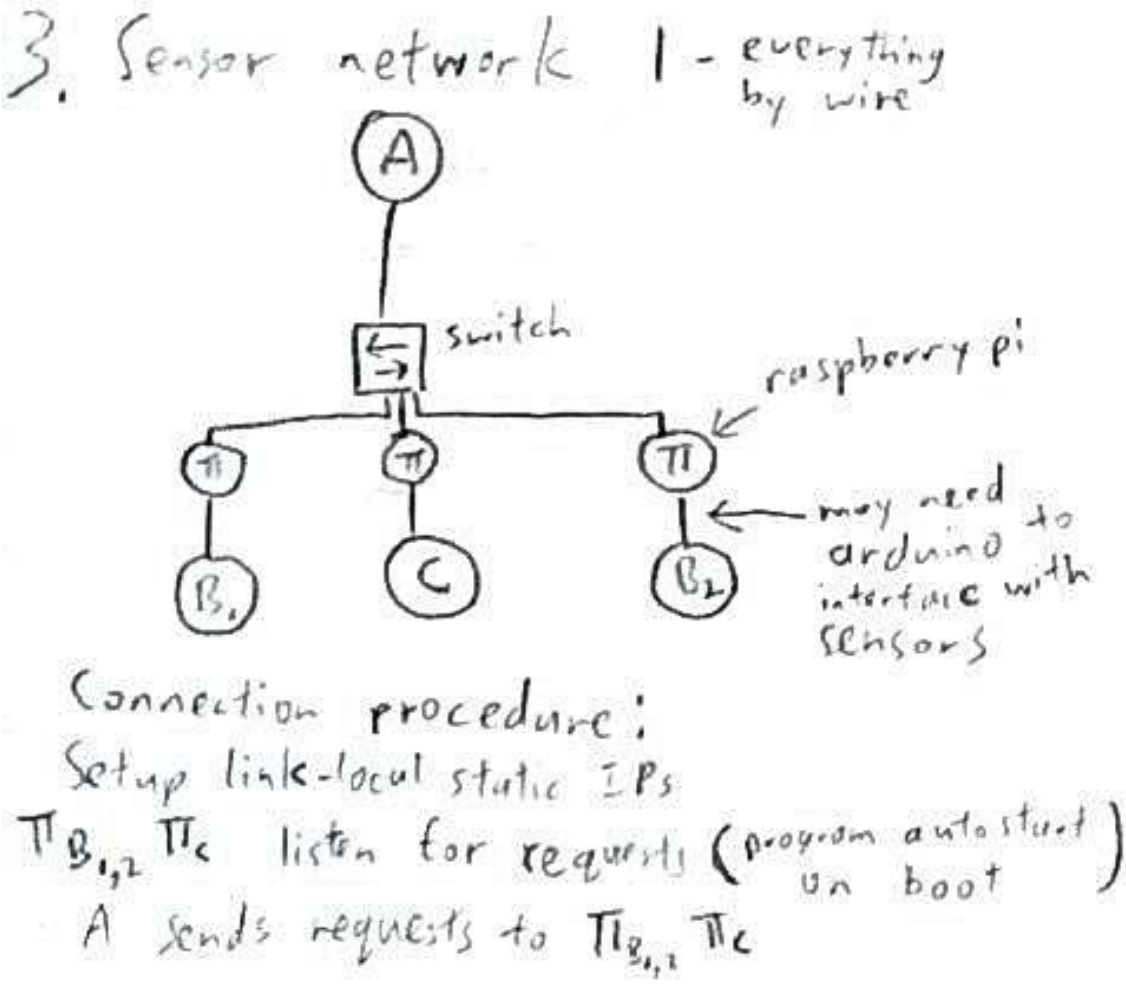

SKETCH 3 BY ERIC SHOWING A PROPOSED NETWORK ARCHITECTURE

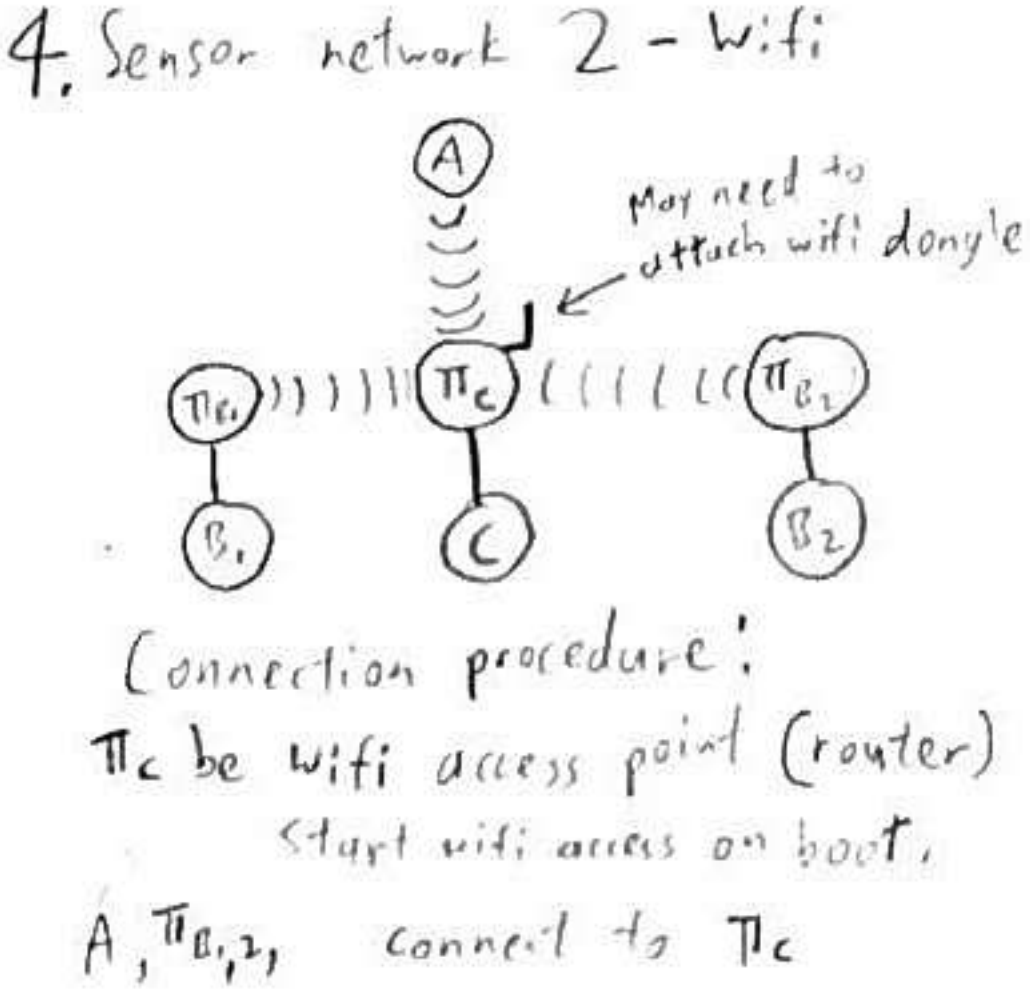

SKETCH 4 BY ERIC SHOWING A PROPOSED NETWORK ARCHITECTURE

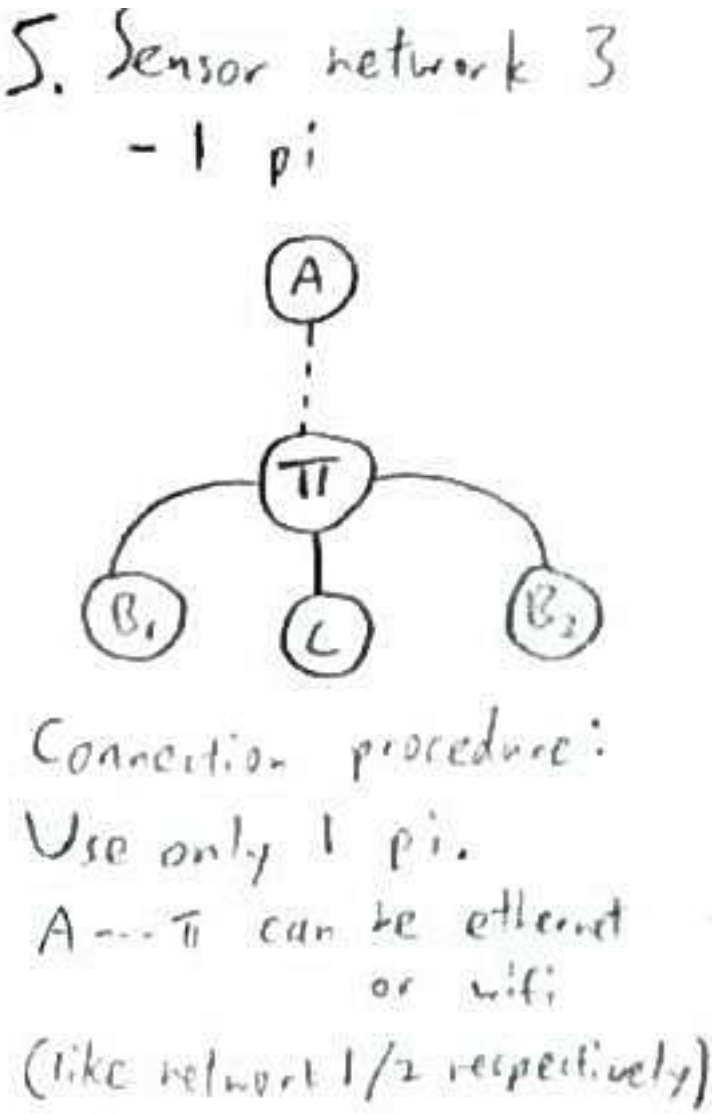

SKETCH 5 BY ERIC SHOWING A PROPOSED NETWORK ARCHITECTURE

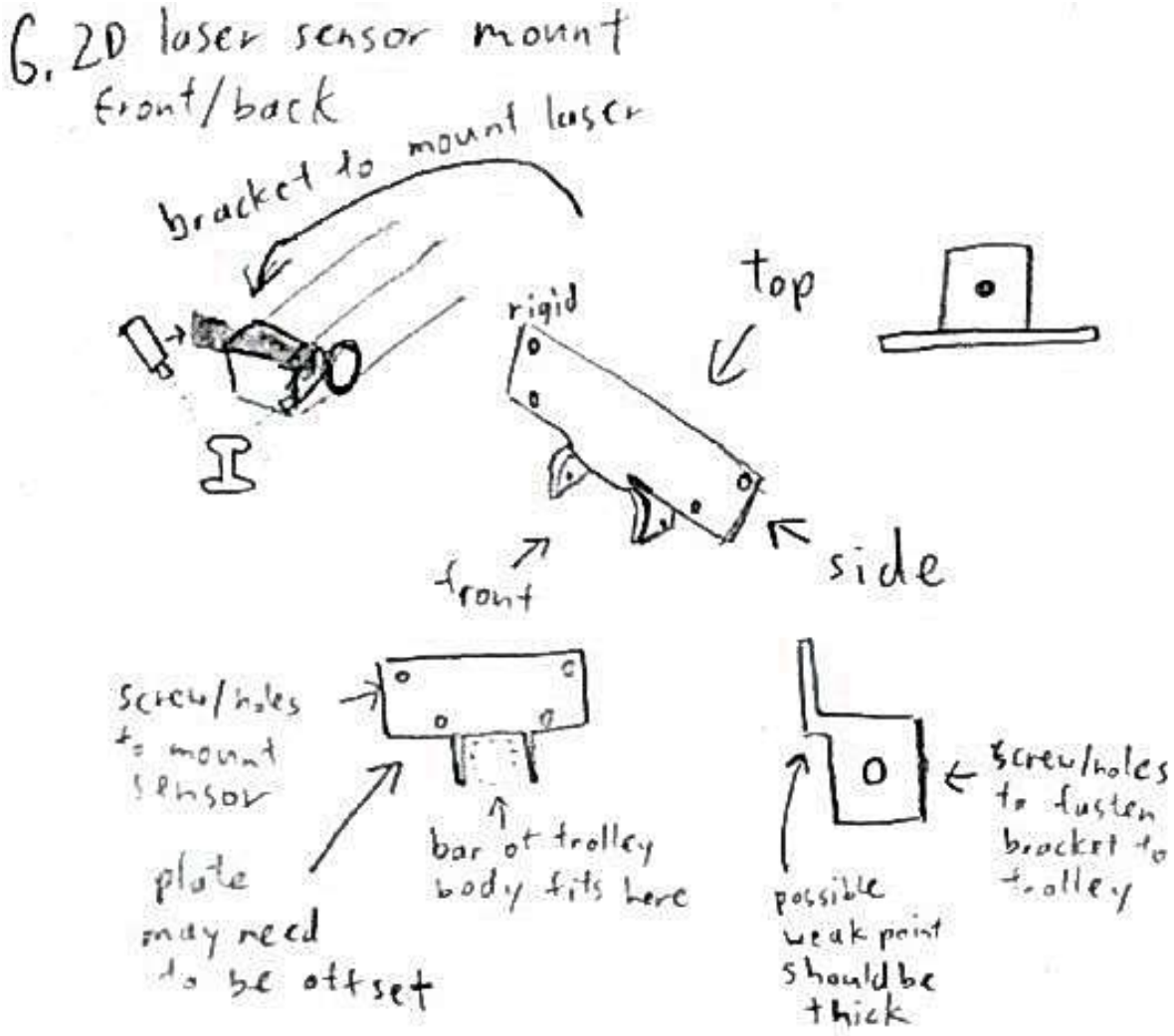

SKETCH 6 BY ERIC SHOWING A PROPOSED NETWORK ARCHITECTURE

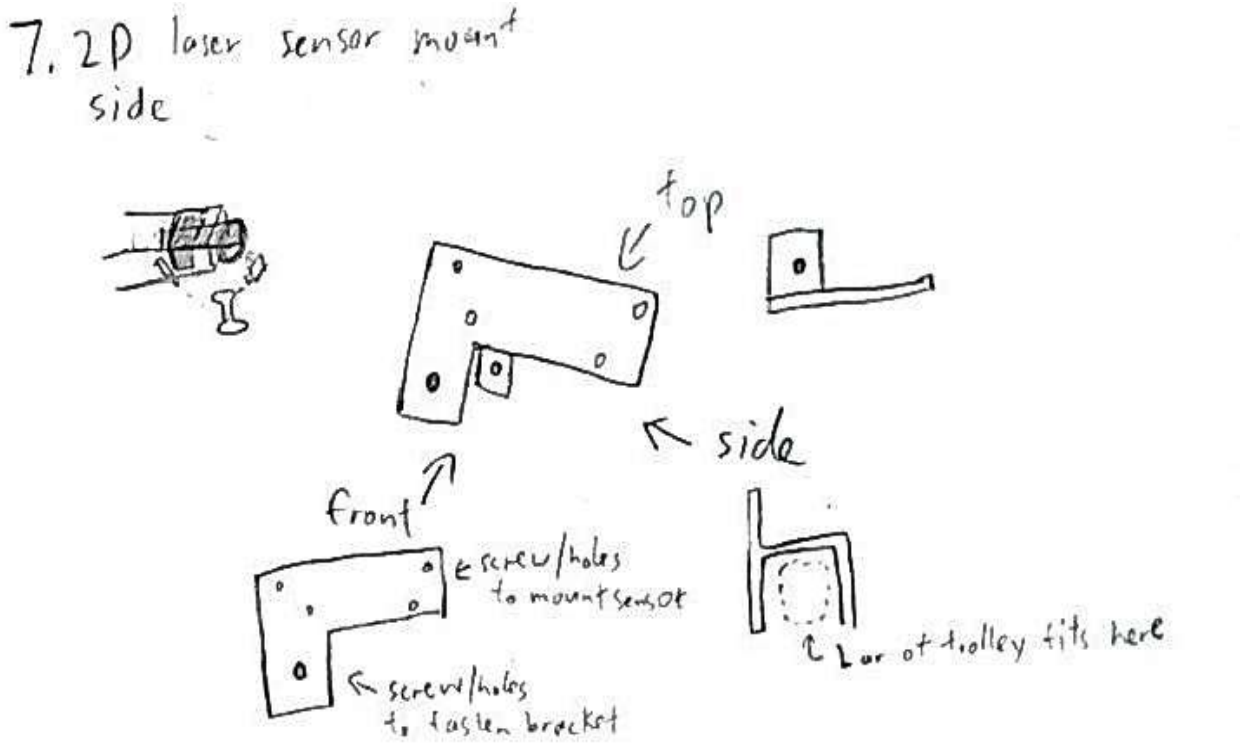

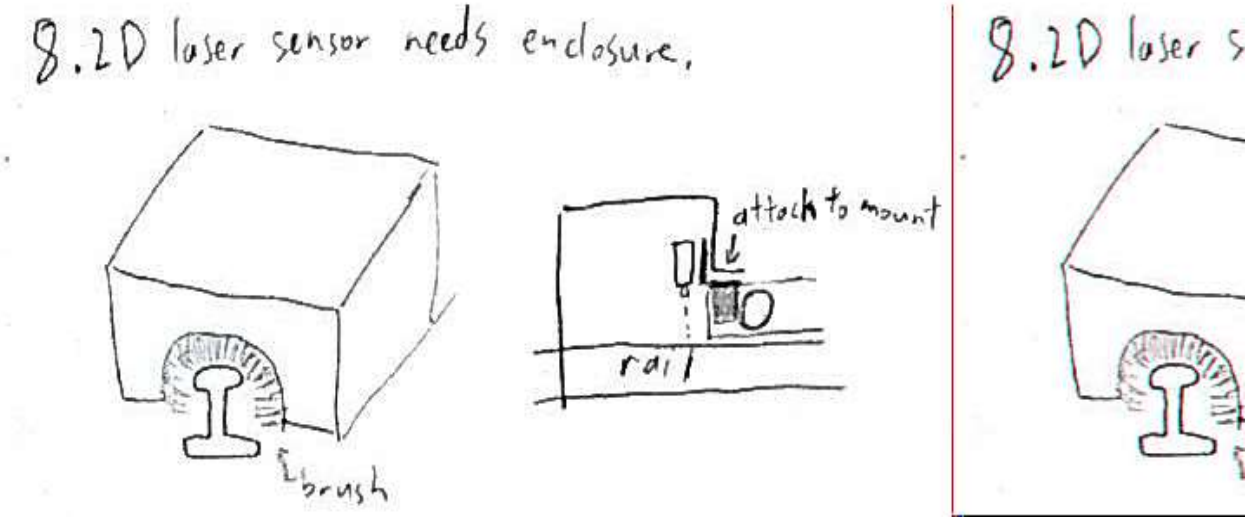

SKETCH 7 AND 8 BY ERIC SHOWING THE 2D LASER SENSOR CONSIDERATIONS

9. Aligning sensor to reference

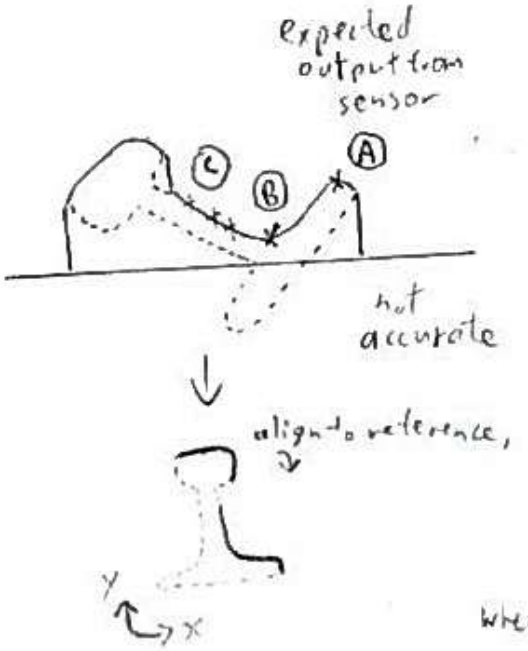

Key points

(A) – 1st maximum from right

(B) – global minimum. (main key point)

1. Rotate about (B) until (A) is as close to reference (A) as possible
2. Translate x/y direction to minimize RMS (change should be minor)

↑ converse RMS also

(C) Between 2nd horizontal (use $\frac{\Delta Y}{\Delta X}$) and (B) select 3 evenly spaced points. (or more?)

$\Delta x = 3$ to find horizontal?

When min RMS only account for x-distance from reference.

10. Aligning Sensor with guess/check

After approximately aligned,

← brute force all combinations of x, y, θ in a range.

$$[X \pm \Delta x] \times [Y \pm \Delta y] \times [\theta \pm \Delta \theta]$$

SKETCH 9 AND 10 BY ERIC SHOWING PROPOSED CURVE FITTING ALGORITHM METHODS

Joo Ern's Sketches

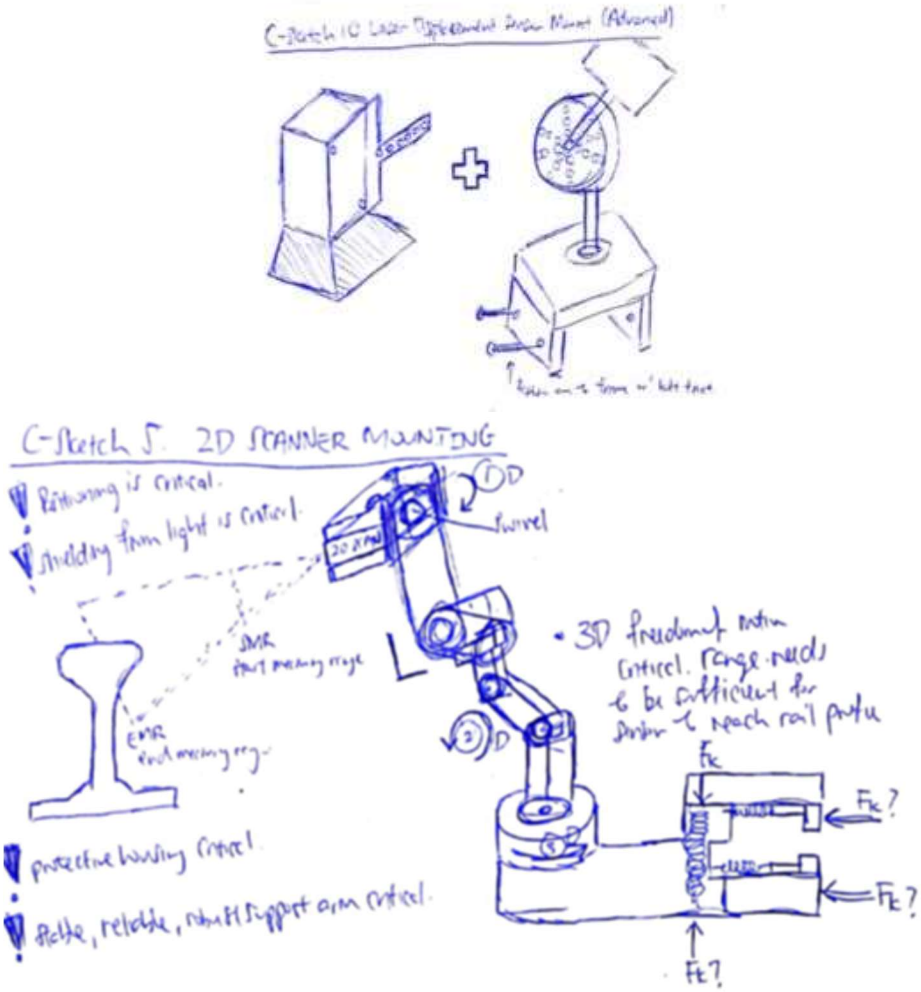

SKETCH 11 AND SKETCH 12 BY JOO ERN, SHOWING POSSIBLE TRI-AXIAL MOBILITY SENSOR MOUNTS

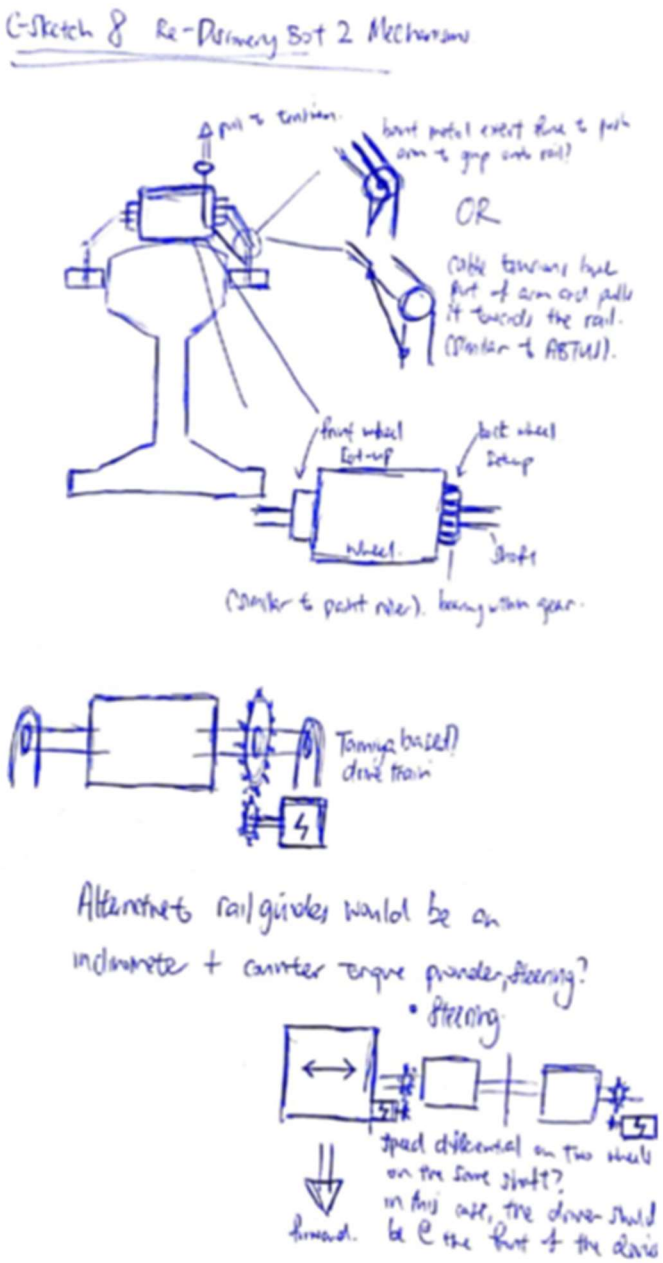

SKETCH 13 BY JOO ERN SHOWING THE DRIVE TRAIN FOR DEVICES ON A SINGLE RAIL

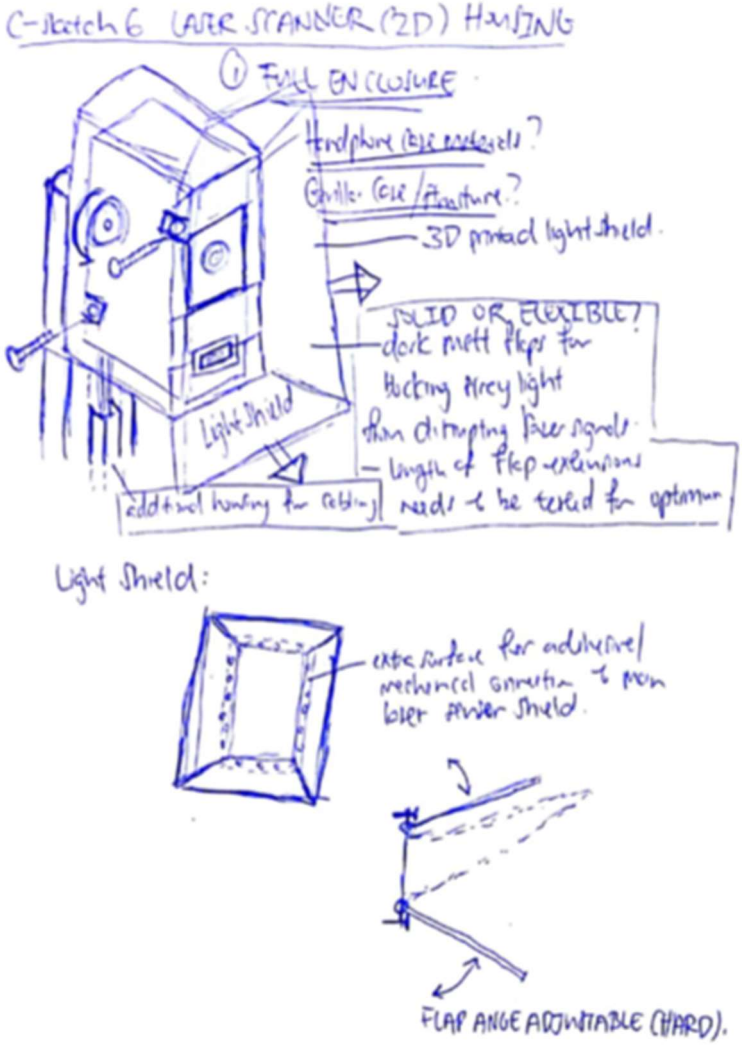

SKETCH 14 BY JOO ERN SHOWING A PROPOSED LASER SENSOR HOUSING

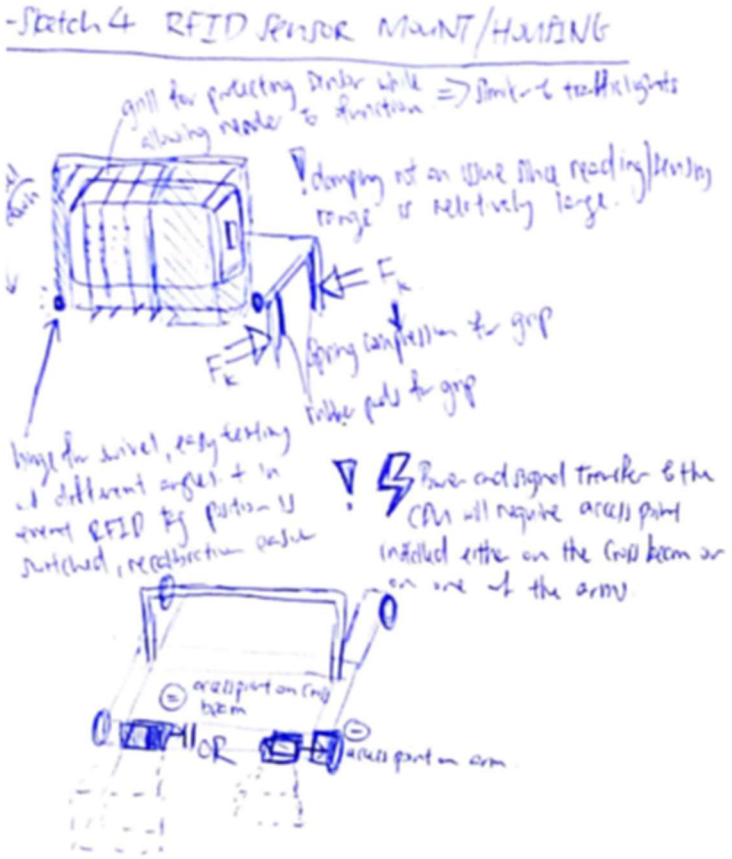

SKETCH 15 BY JOO ERN SHOWING A PROPOSED RFID READER MOUNT

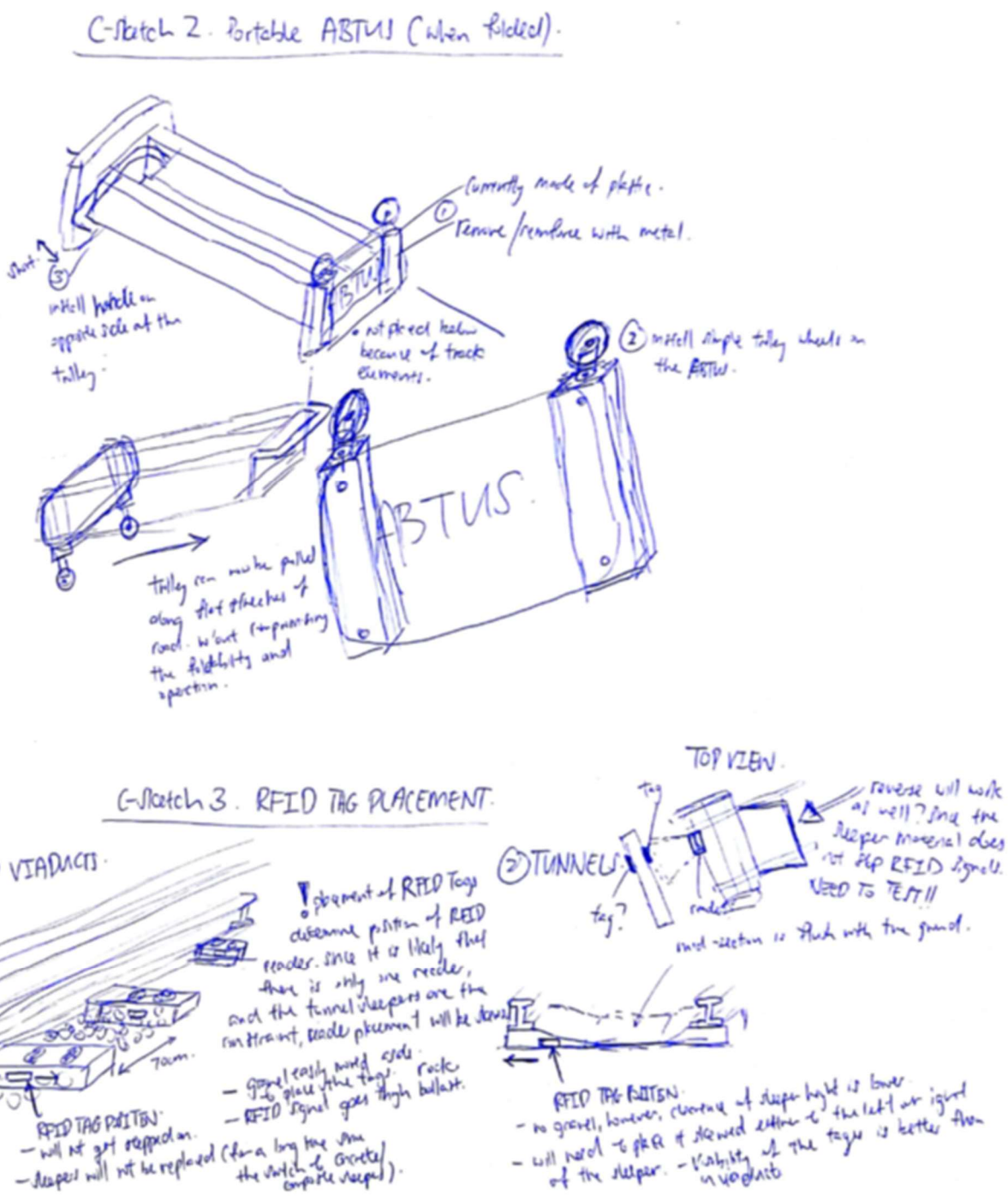

SKETCH 16 AND 17 BY JOO ERN SHOWING PROPOSED MOBILITY ENHANCEMENTS AND RFID TAG PLACEMENTS

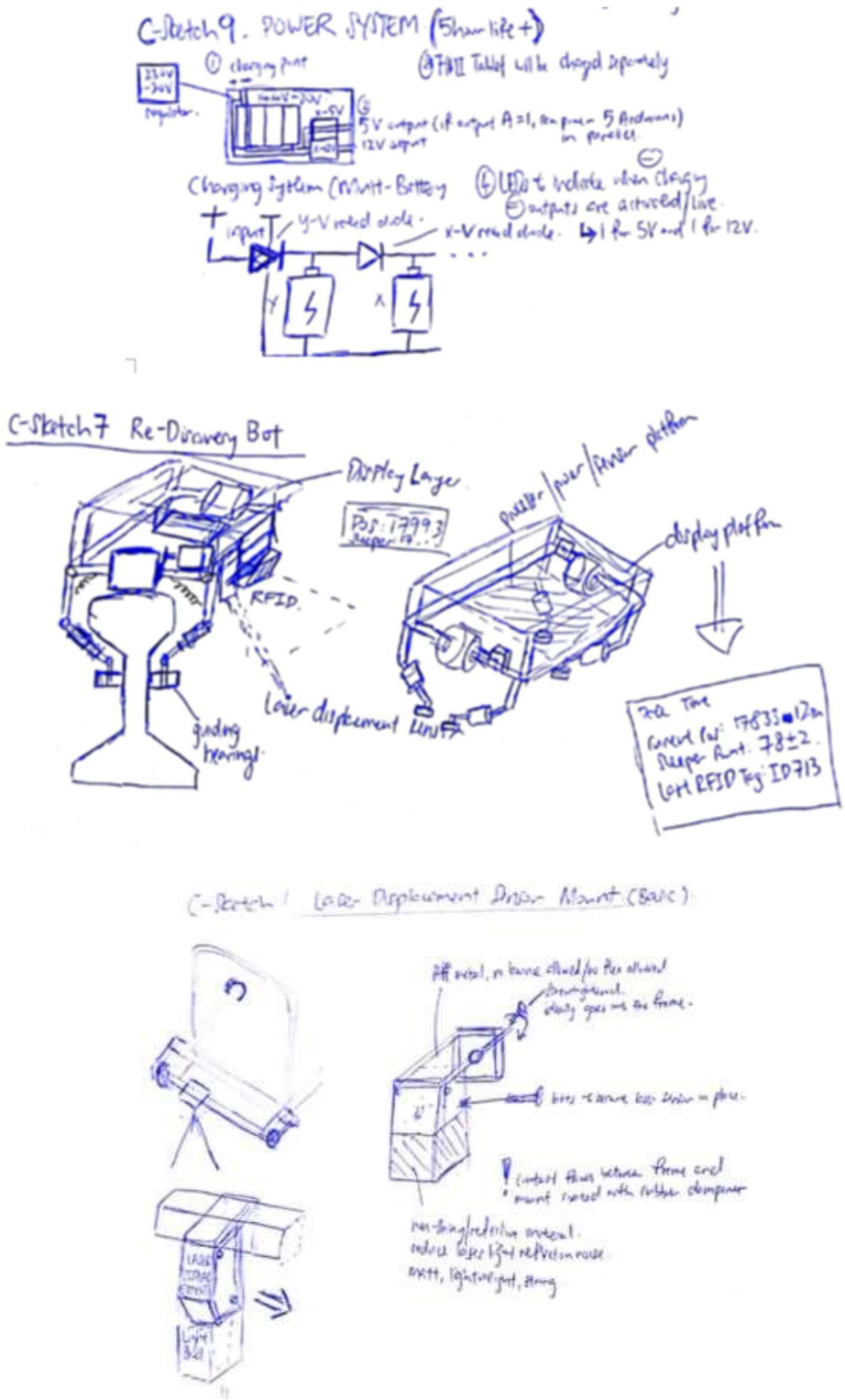

SKETCH 18, SKETCH 19 AND SKETCH 20 BY JOO ERN, SHOWING A PROPOSED POWER SYSTEM, FRAME DESIGN FOR A RE-DISCOVERY ROBOT AND LASER SENSOR MOUNT

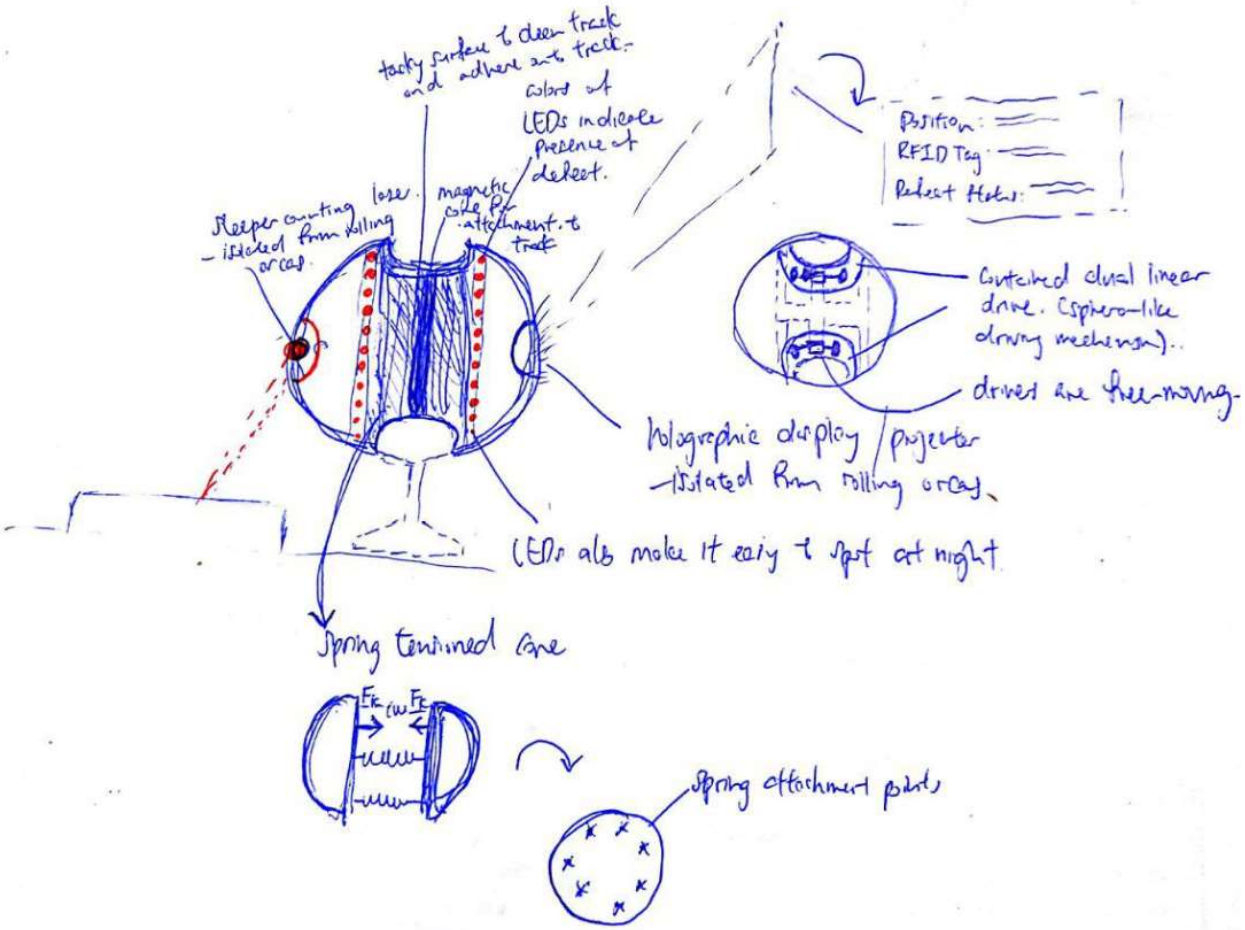

SKETCH 21 BY JOO ERN SHOWING A SPHERE CONCEPT FOR THE REDISCOVERY ROBOT

Wei Qi's Sketches

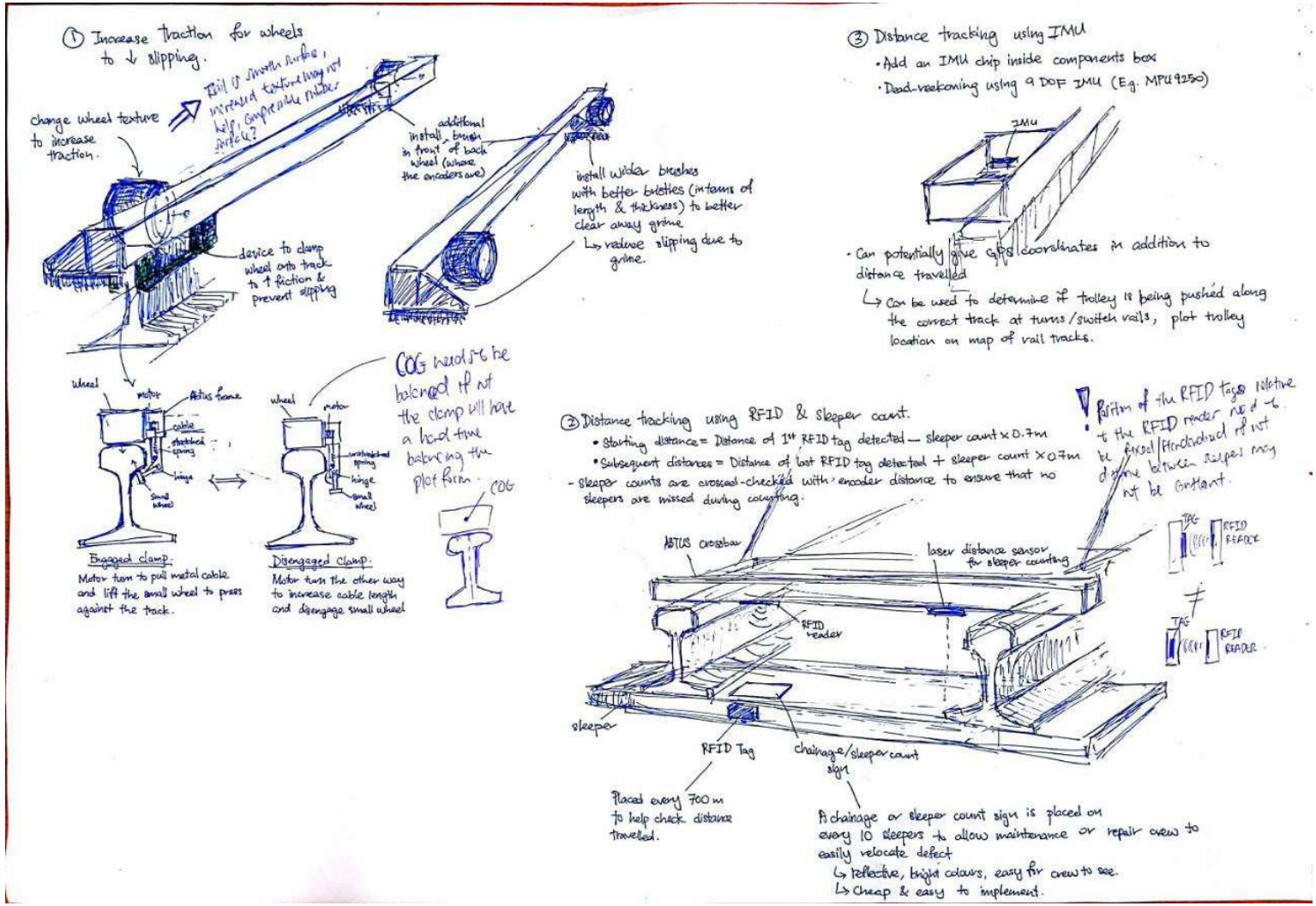

SKETCH 23 ,SKETCH 24 AND SKETCH 25 BY WEI QI SHOWING MECHANISMS FOR IMPROVING WHEEL TRACTION, POSITIONING FOR IMUS AND DISTANCE TRACKING METHODS USING RFID READERS

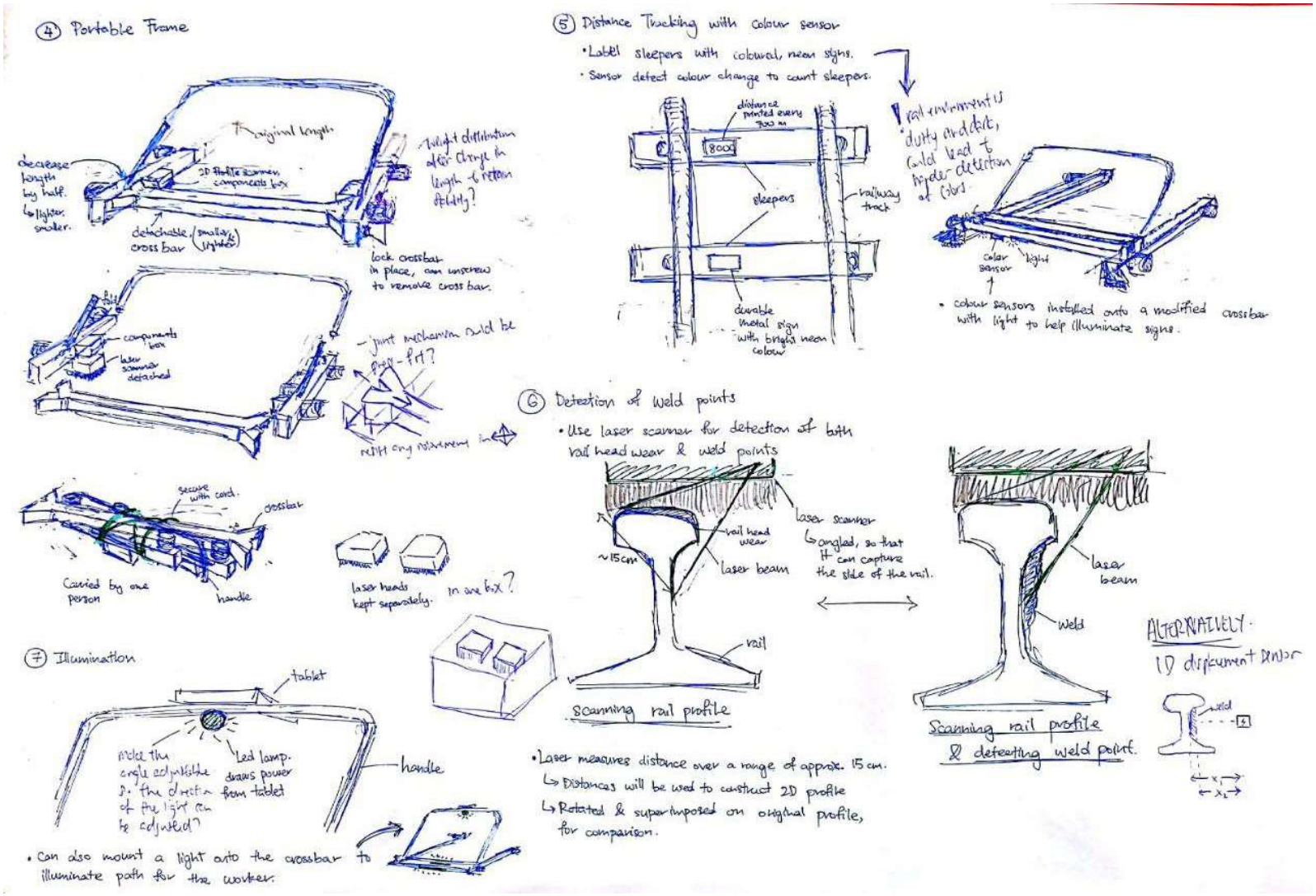

SKETCH 26, SKETCH 27, SKETCH 28 AND SKETCH 29 BY WEI QI SHOWING A MECHANISM FOR DISASSEMBLING THE TROLLEY, A TORCH LIGHT MOUNT, MAPPING METHOD AND 2D LASER SENSOR PLACEMENT

Teng Foong's Sketches

RAILORDS

DESIGN JOURNAL 3
CONCEPT GENERATION

After Review 1, our team started generating ideas for our final prototype. Each team member was to sketch several ideas over recess week. As our team is still in the process of selecting the concepts that would be incorporated in the final solution, this journal would primarily focus on the concepts I have came out with in the past 3 weeks. Concept generation was done in two phases: 1) Form factor of solution 2) Specific features within these form factors. This ensured that both concept generation covered both breath and depth within the design space.

(A) AUTONOMOUS RAIL SCANNER

Instead of using hand-pushed trollies, perhaps an autonomous rail scanner can be used to detect rail defects instead. This robot would follow behind the last train every night, allowing it to scan an entire rail line in a single night. This can potentially increase the frequency of scanning tremendously since at the moment, each section of track is only scanned on average once every year.

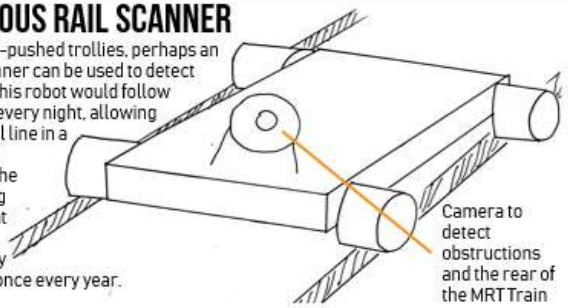

(B) HIGHLY ERGONOMIC TROLLEY

Another possible solution would be to fabricate an entire trolley from scratch. This allows for a lot of freedom in designing the trolley's frame. Since the trolley crew complained that the current GRAW trolley is bulky and heavy, we can take a minimalist approach and design a trolley that is highly lightweight and portable. Mechanisms such as a retractable handle can make the trolley highly compact and easy to carry/store.

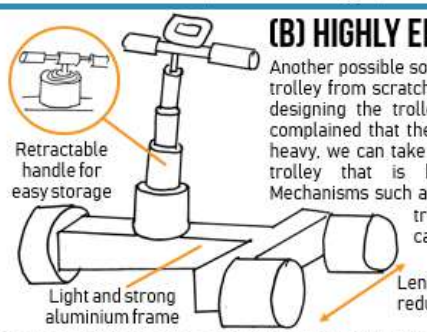

(C) NOVEL MAPPING SYSTEM ON AN EXISTING TROLLEY

Instead of making the entire trolley from scratch, we can also use the decommissioned ABTUS trolley SMRT has provided us as the base for our solution. New sensors such as a RFID reader and laser displacement sensor would be installed on the existing frame, is required for a new defect mapping system. Instead of solely relying on encoders for localisation of the trolley, RFID tags placed every 100m and the track's sleepers would serve as new landmarks for the trolley, which should increase accuracy and reliability of defect mapping.

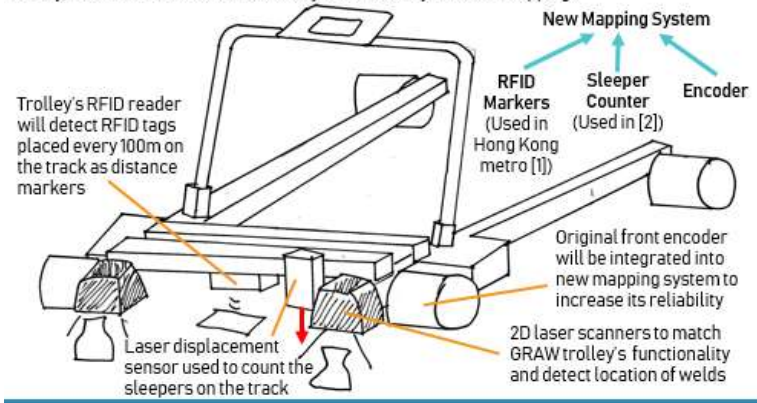

(D) SMALLER MAPPING DEVICE FOR REIDENTIFYING DEFECTS

For effective maintenance to take place, not only do the defects have to be accurately mapped by the trolley crew, the repair crew must be able to reidentify them the next day. Therefore, repair crews need to be equipped with the same mapping technology as the one installed on the trolley. An additional smaller mapping device could be fabricated that would be used by the repair crew to find back the reported defect so they can make amendments to that part of the track. The repair crew would slide this device along the track and a display would show how far away are they from the reported defect.

This device and either be hand pushed or motorised. This depends on how comfortable SMRT is with introducing motorised elements on the track during nightworks.

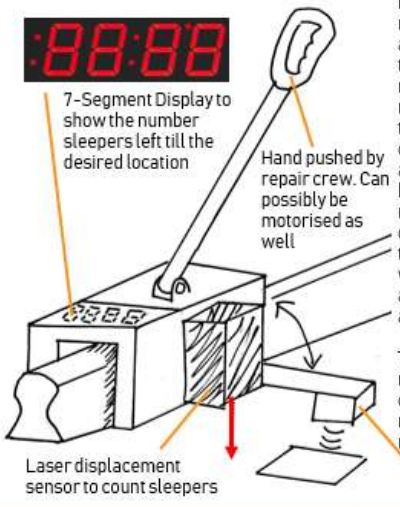

PAGE 1: FORM FACTOR IDEATION

DONE BY: LAM TENG FOONG (1001487) | PROJECT S08 SMRT_ABTUS

SKETCH 30, SKETCH 31, SKETCH 32 AND SKETCH 33, SKETCHED AND EXPLAINED BY TENG FOONG

FORM FACTOR-SPECIFIC IDEAS

As I thought form factors (C) & (D) had promise, I looked into them and generated concepts on how to implement them.

A) "SECOND STOREY" SENSOR MOUNTING SYSTEM

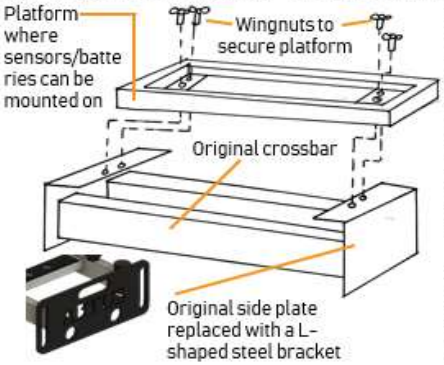

Form factor: (C)
In order to install new sensors/batteries/processors onto the existing ABTUS trolley without applying permanent modifications onto it, a secondary platform can be installed on top of the original crossbar. It would be made of aluminium extrusions, allowing for mounts to be quickly prototyped and also the flexible arrangement of components.

The original side plates of the crossbar would be removed and replaced with a L-shaped bracket. This change is reversible since the plates are only mounted on my M5 screws.

B) TORCH LIGHT MOUNT

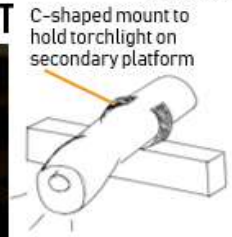

Form factor: (C)
From our observations during the nightworks, we noticed that workers had to hold a torchlight to illuminate the front of the trolley while pushing it. Hence, perhaps a C-shaped mount can be installed to help the workers hold their torchlight so they can focus more on the task at hand.

C) SPRING LOADED SYSTEM TO LATCH ONTO RAIL

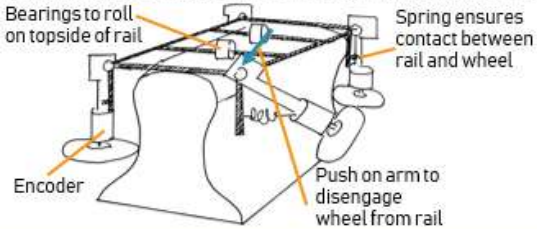

Form factor: (D)
In order for the mini device to work, it must be able to latch onto the rail. A spring loaded system as shown on the right allows the wheels to be pushed against the rail, preventing slippage and ensuring accurate readings by the encoders.

PAGE 2: FORM FACTOR- SPECIFIC IDEATION

SKETCH 34, SKETCH 35 AND SKETCH 36, SKETCHED AND EXPLAINED BY TENG FOONG

Kevin's Sketches

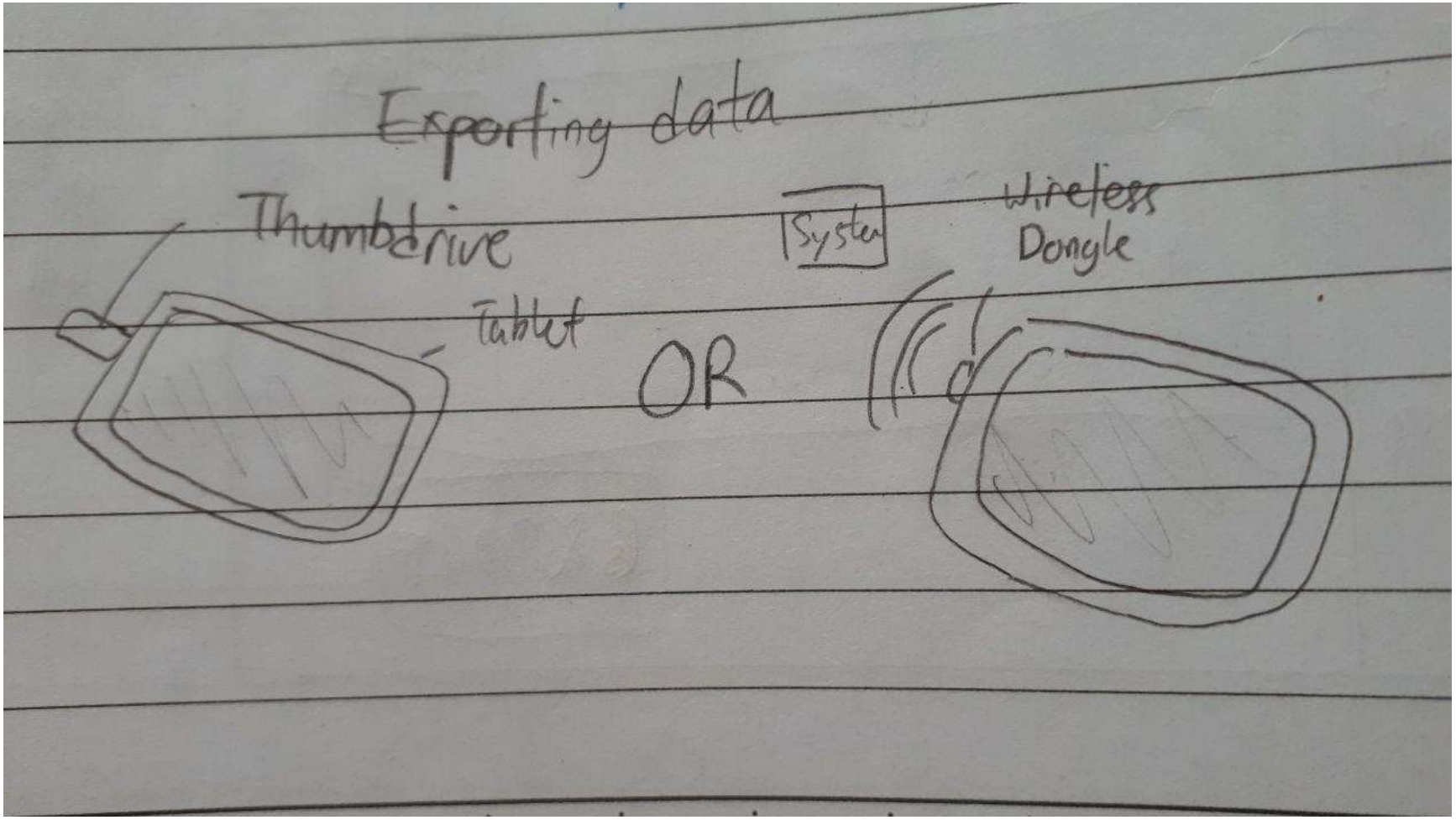

SKETCH 37 BY KEVIN SHOWING THE DATA EXPORTING METHODS

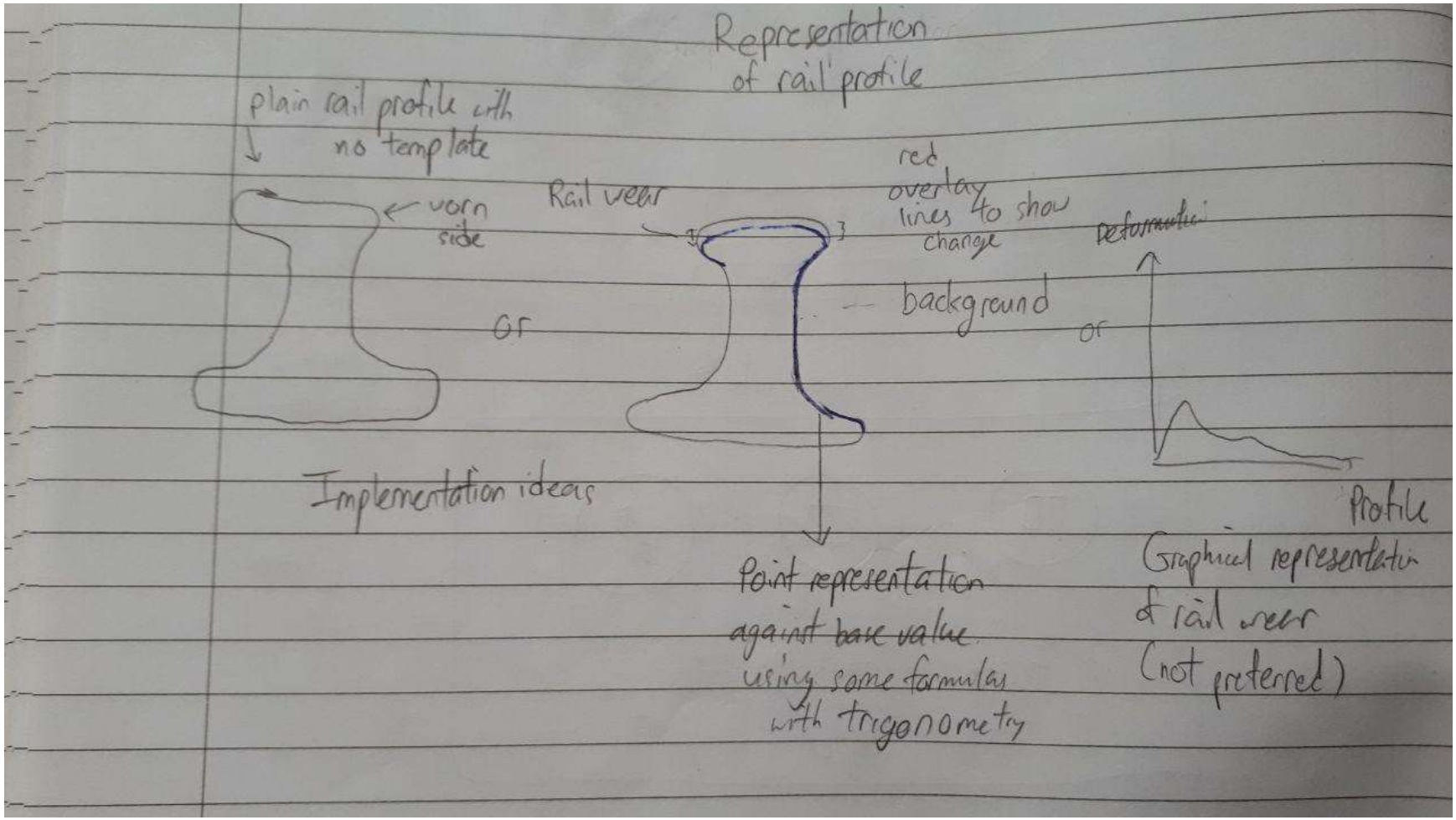

SKETCH 38 BY KEVIN SHOWING THE DIFFERENT WAYS TO REPRESENT RAIL PROFILE

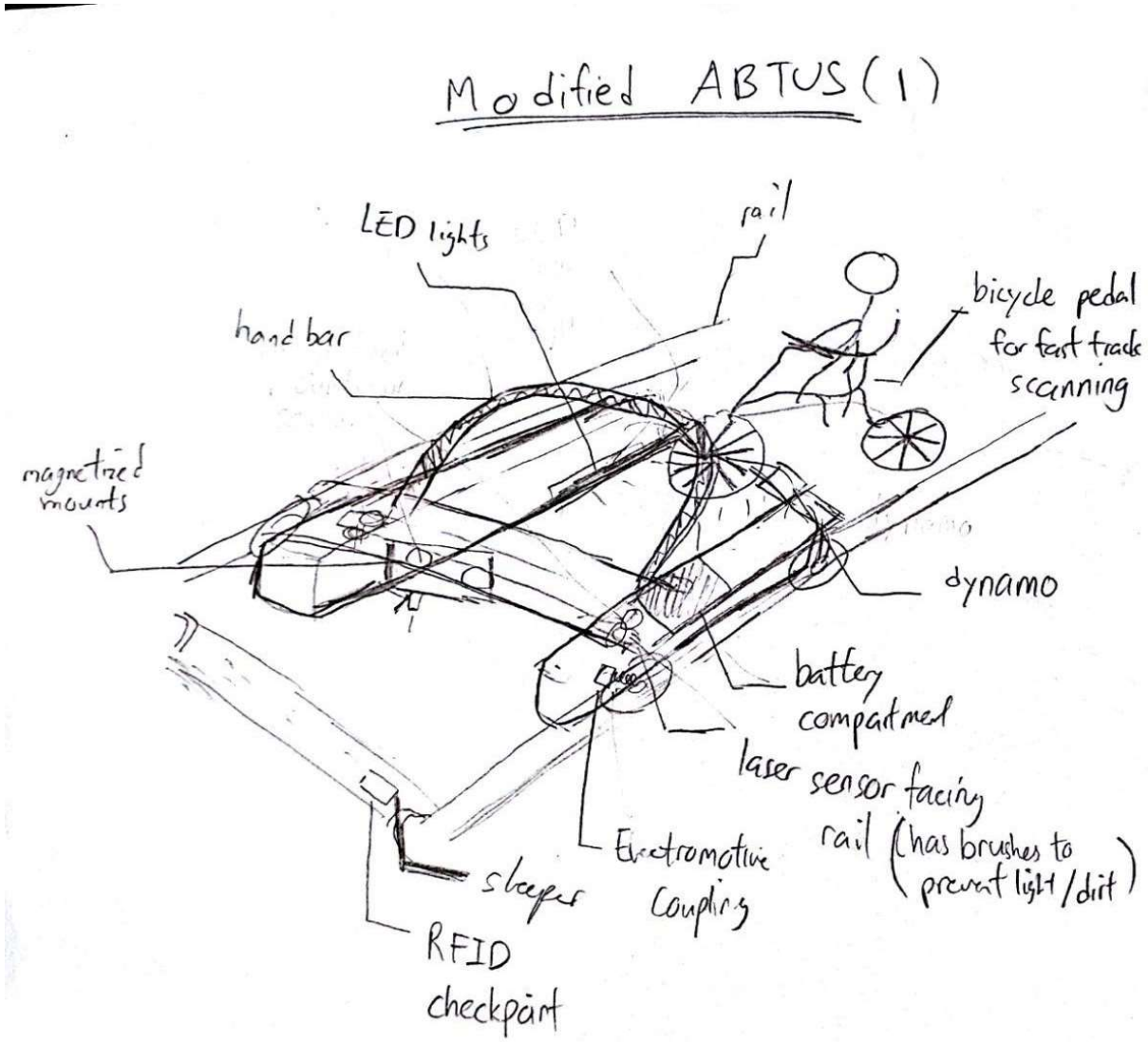

SKETCH 39 BY KEVIN SHOWING AN OVERALL DESIGN FOR AN UPGRADED ABTUS CONCEPT

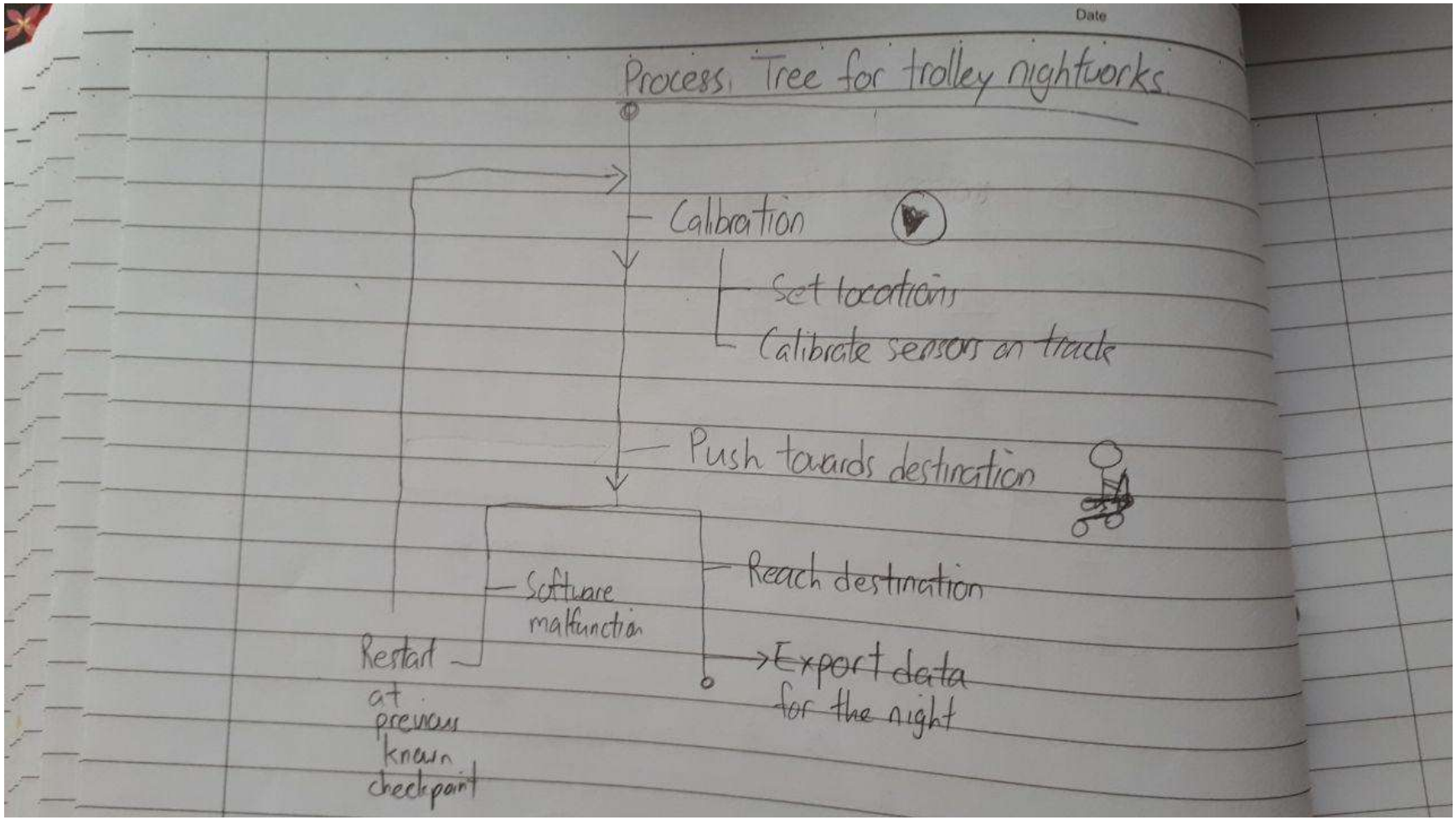

SKETCH 40 BY KEVIN SHOWING A PROCESS TREE FOR THE RAIL MAINTENANCE SYSTEM

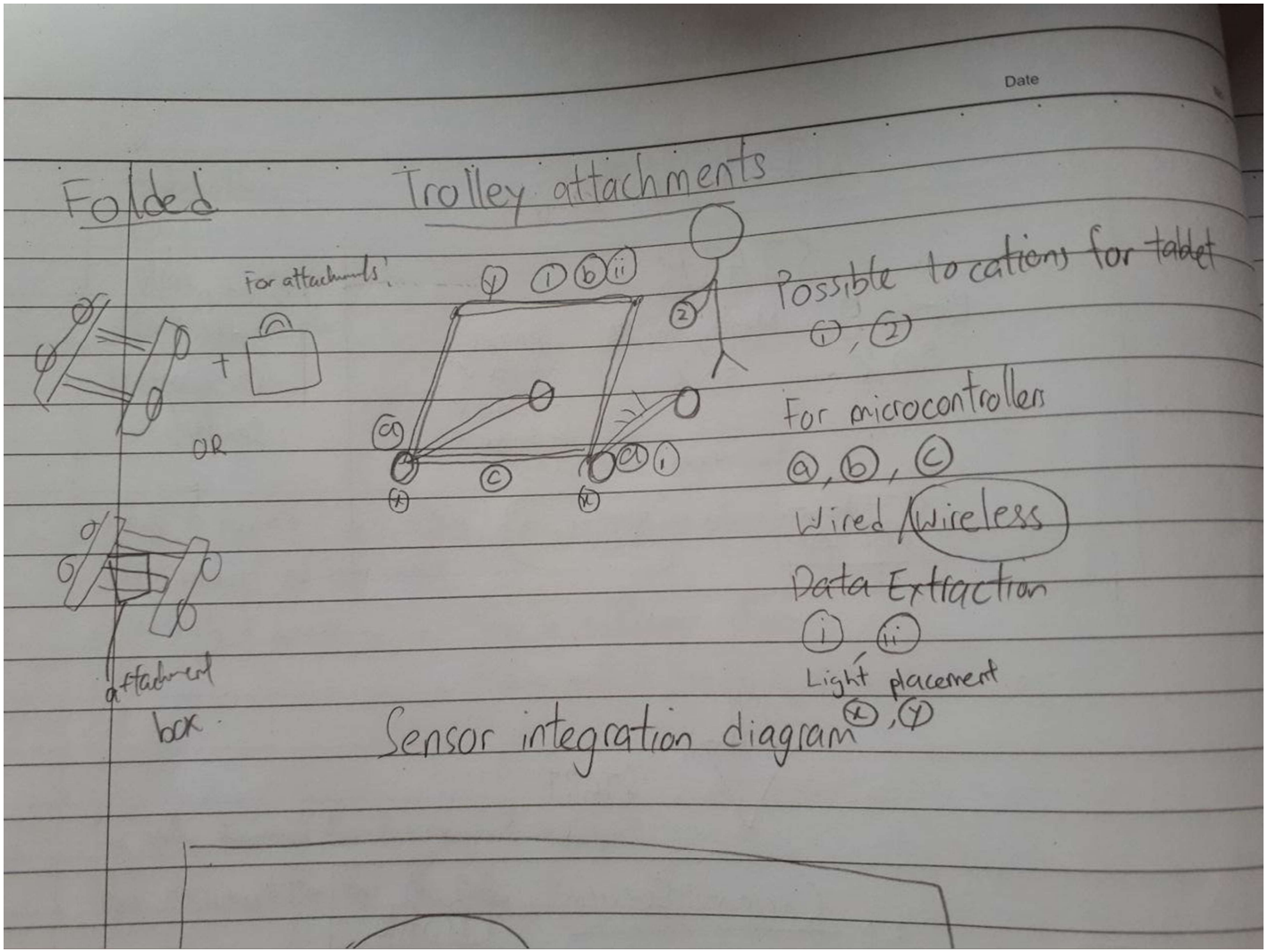

SKETCH 41 BY KEVIN SHOWING PROPOSED SENSOR MOUNTING POSITIONS

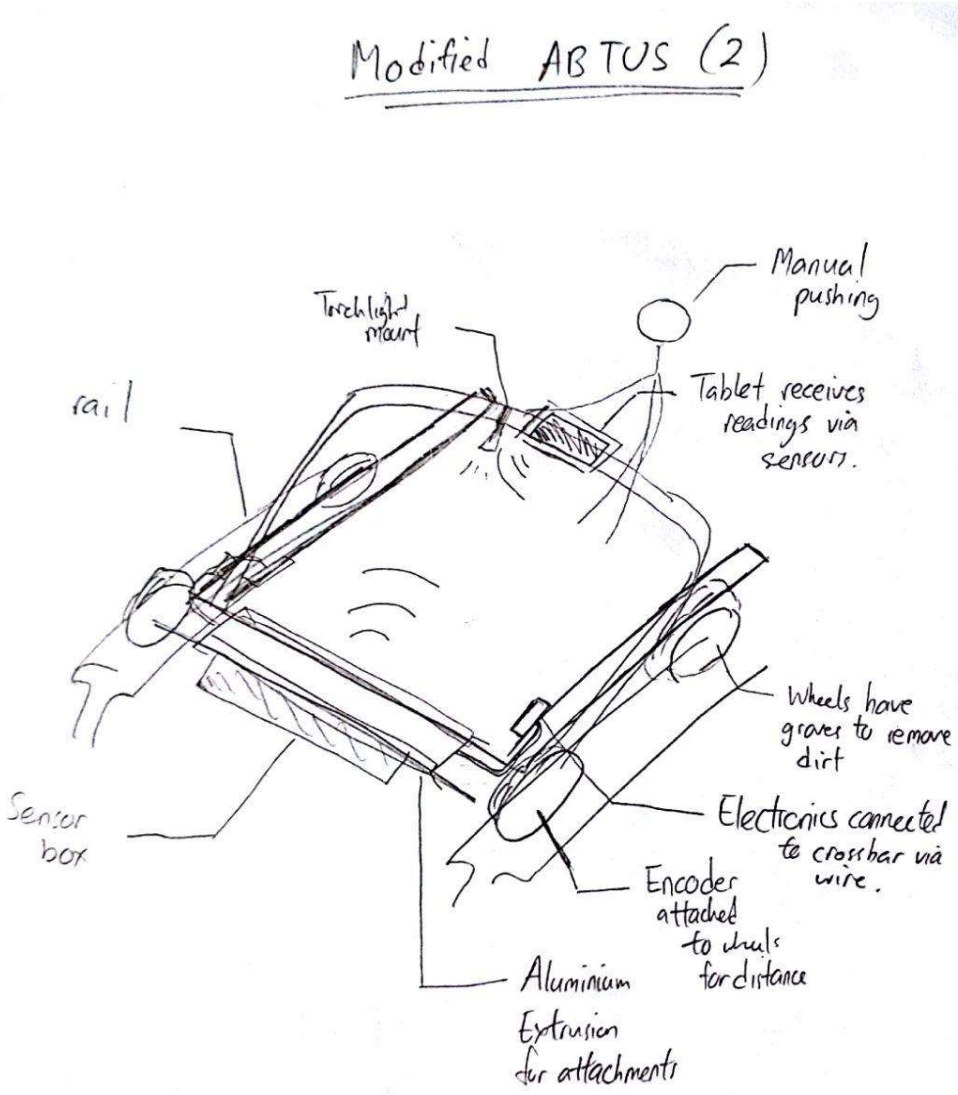

SKETCH 42 BY KEVIN SHOWING AN OVERALL CONCEPT FOR THE MODIFIED ABTUS

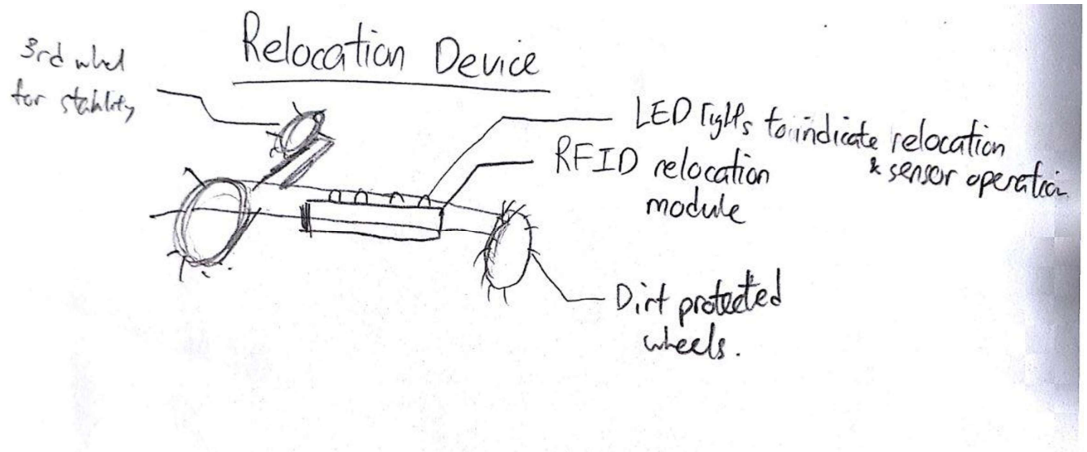

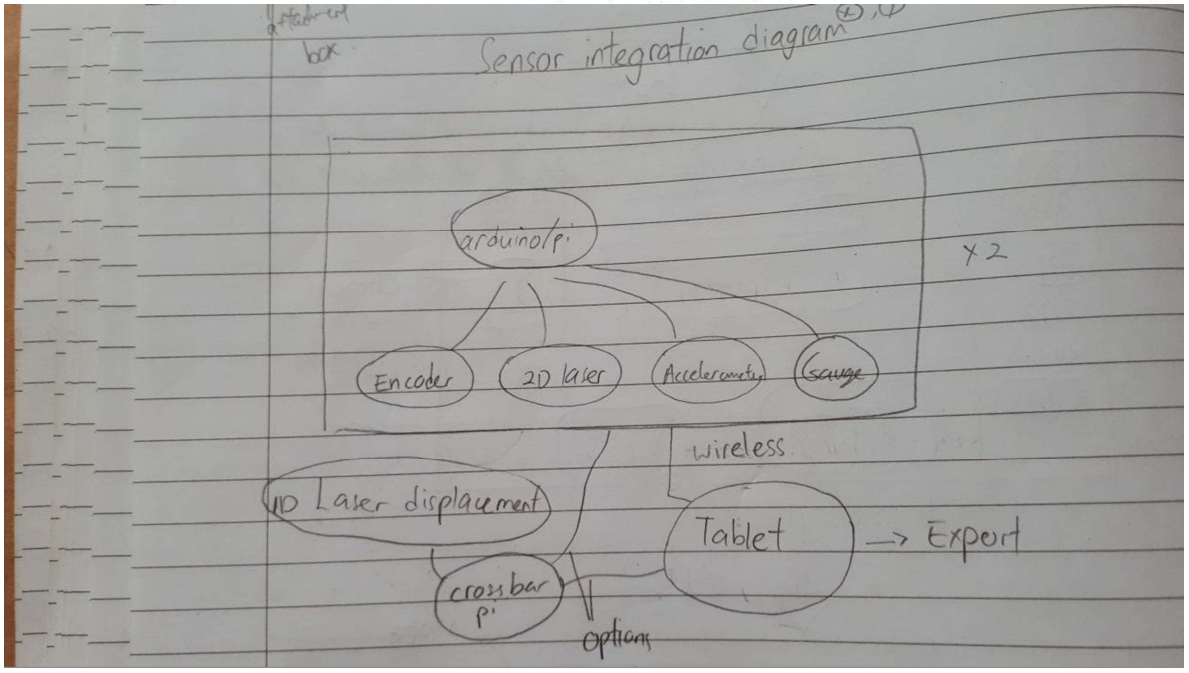

SKETCH 43 AND 44 BY KEVIN, SHOWING A SKETCH FOR THE RELOCATION DEVICE AND A PROPOSED NETWORK ARCHITECTURE

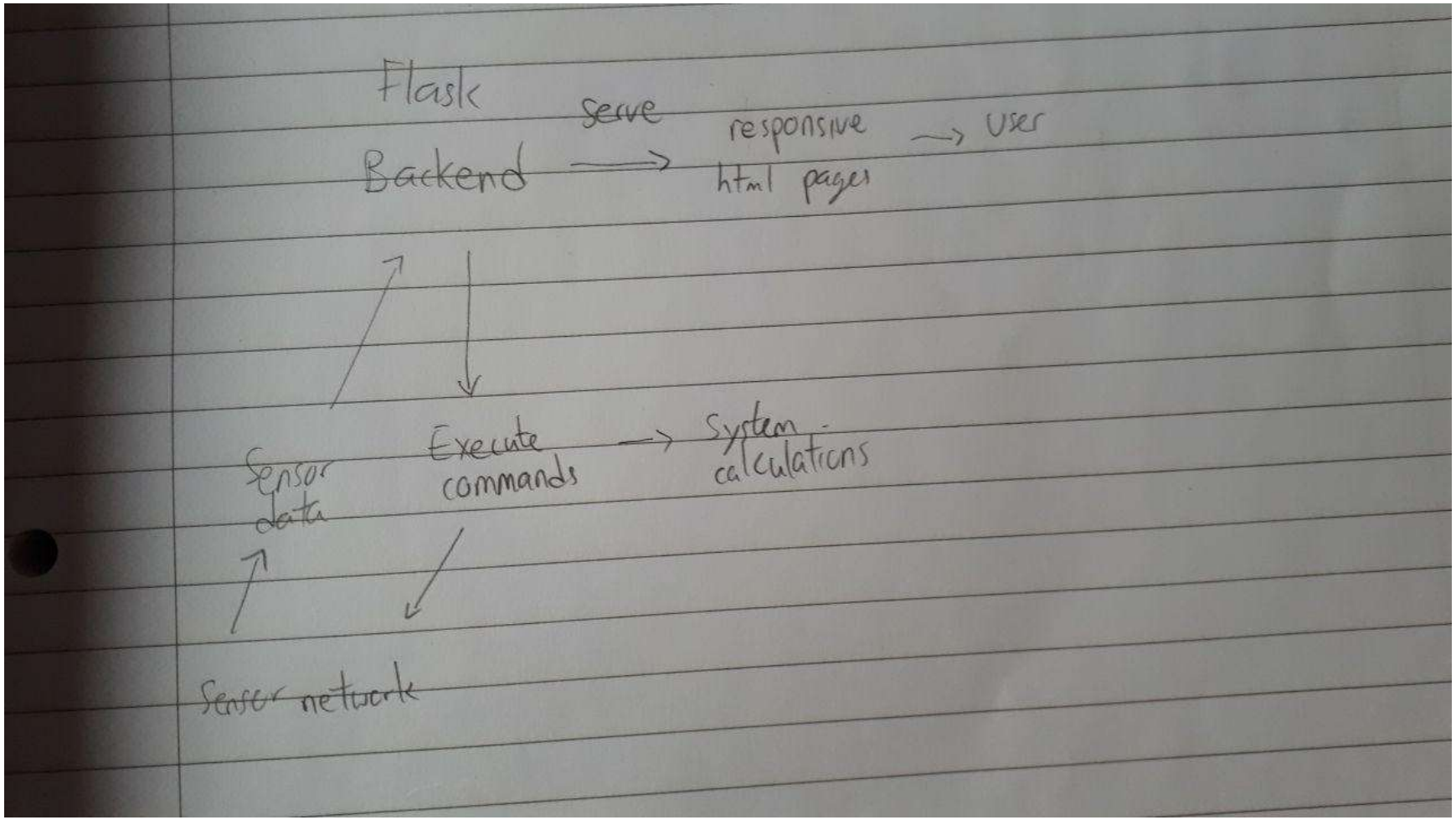

SKETCH 45 BY KEVIN SHOWING A PROPOSED LOGIC FOR THE USER INTERFACE

Nicholas' Sketches

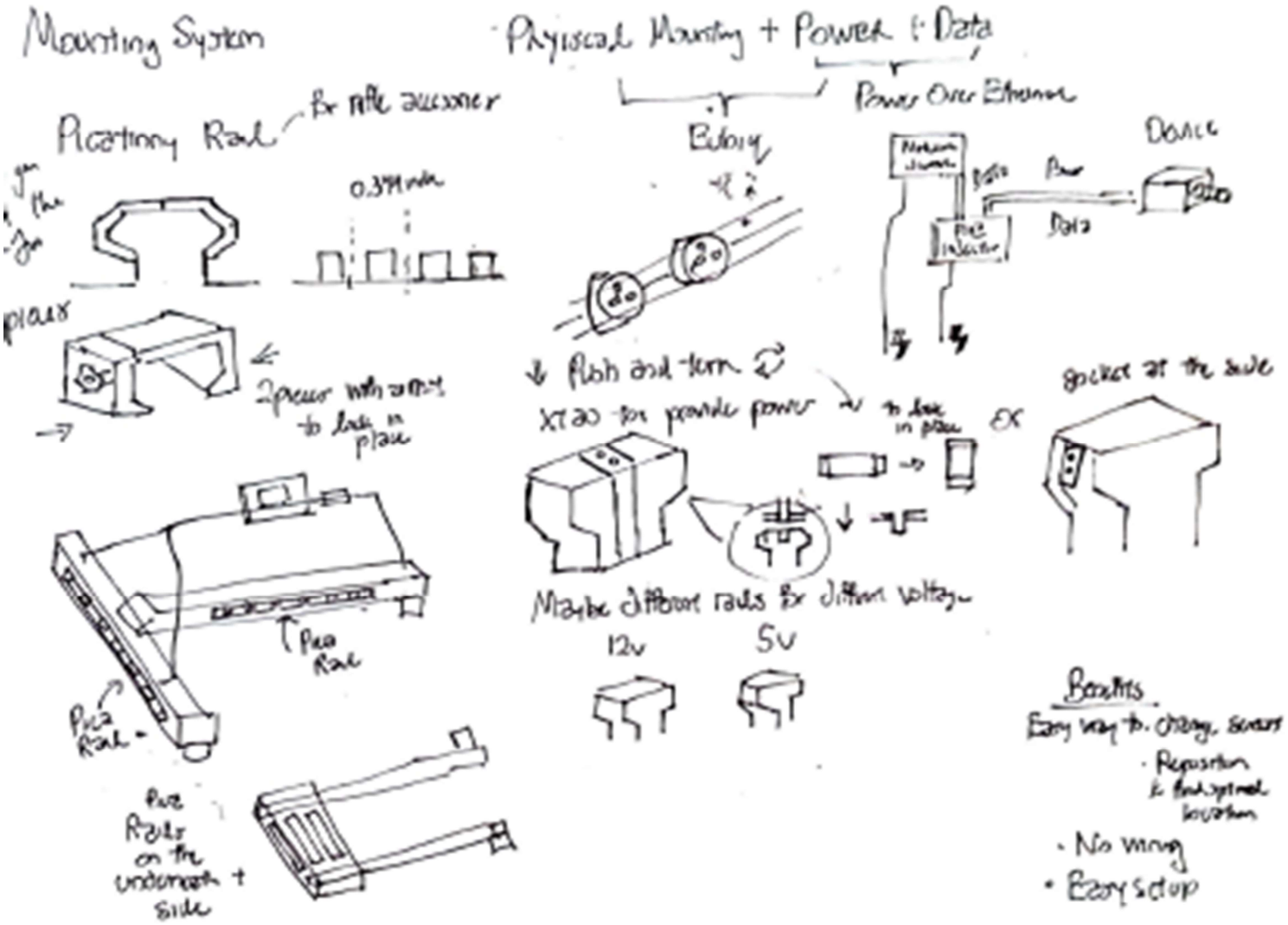

SKETCH 46 BY NICHOLAS SHOWING A PROPOSED POWERED MOUNTING SYSTEM FOR SENSORS

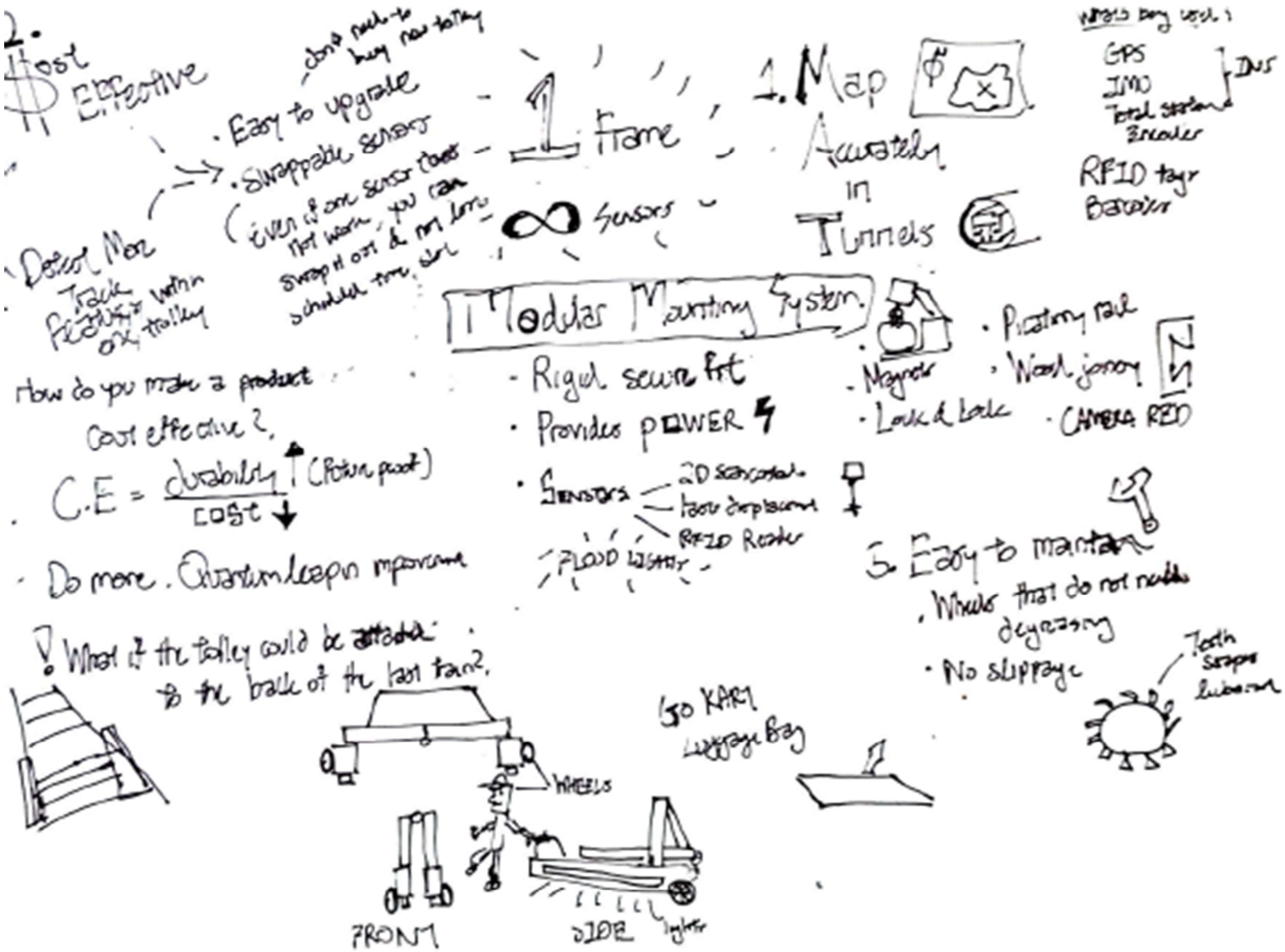

SKETCH 47 BY NICHOLAS SHOWING FEATURES FOR AN OVERALL CONCEPT FOR THE REPLACEMENT GRAW TROLLEY

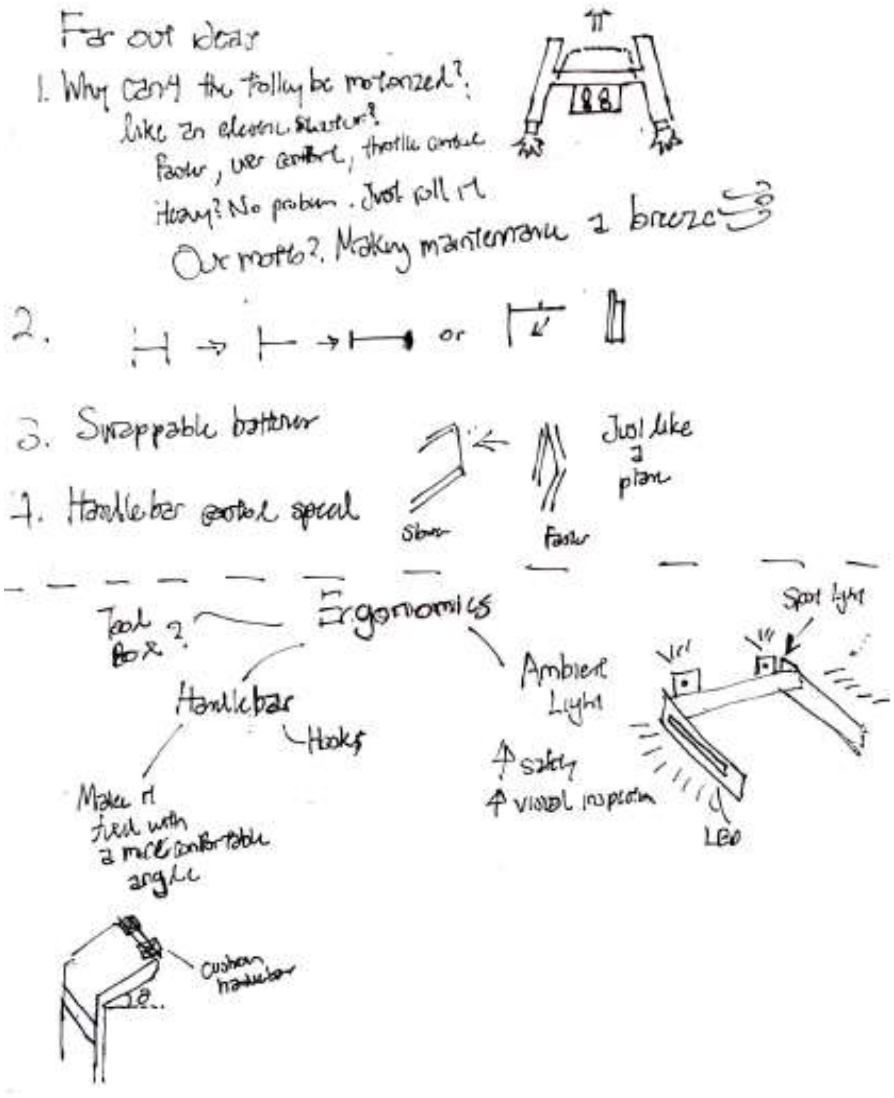

SKETCH 48 BY NICHOLAS SHOWING A PROPOSAL TO MOTORIZE THE GRAW REPLACEMENT TROLLEY

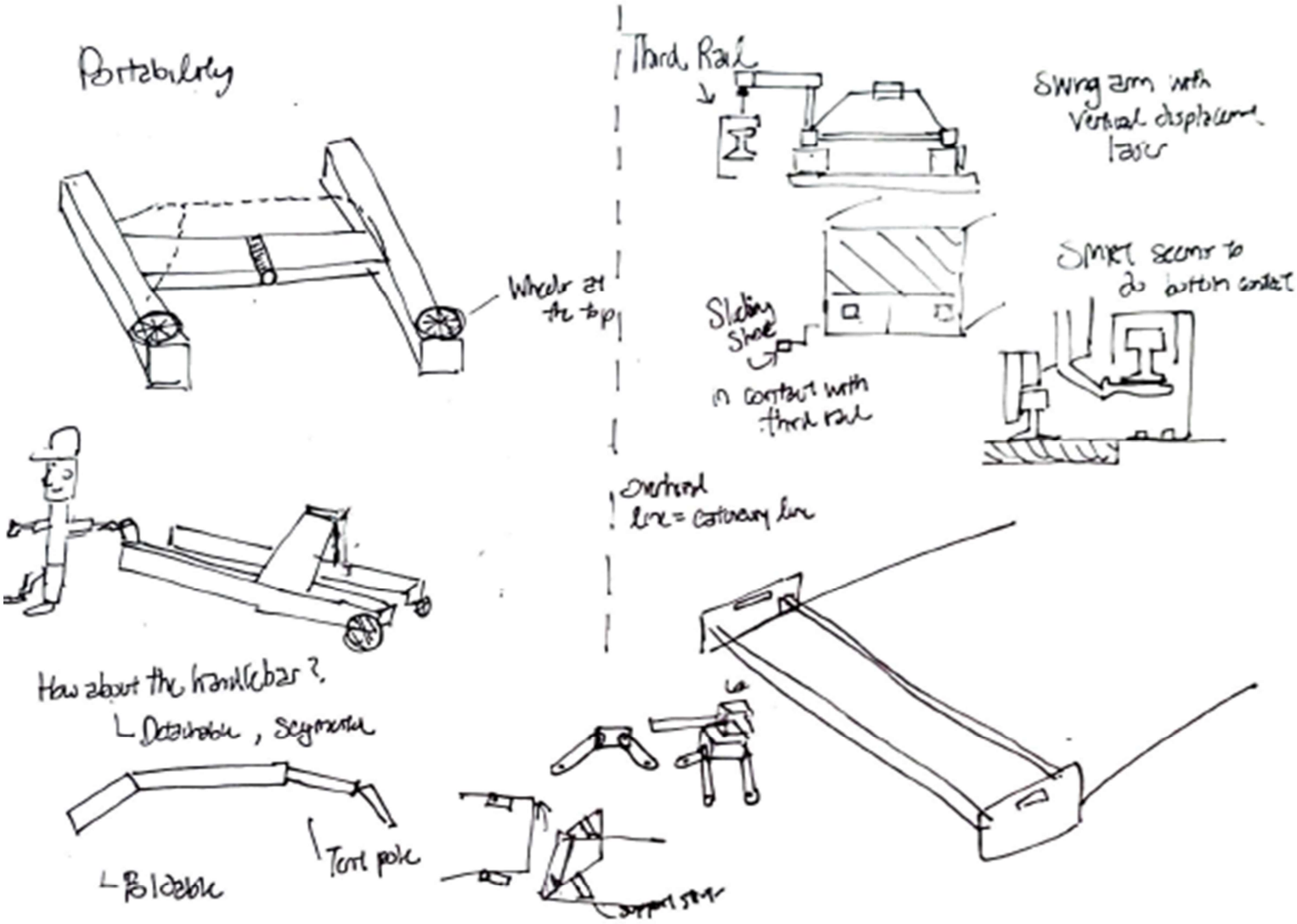

SKETCH 49 AND SKETCH 50 BY NICHOLAS, PROPOSING A METHOD FOR ADDING HANDLEBARS AND WHEELS TO THE TROLLEY, ALONG WITH A METHOD FOR MEASURING THE THIRD RAIL SAG

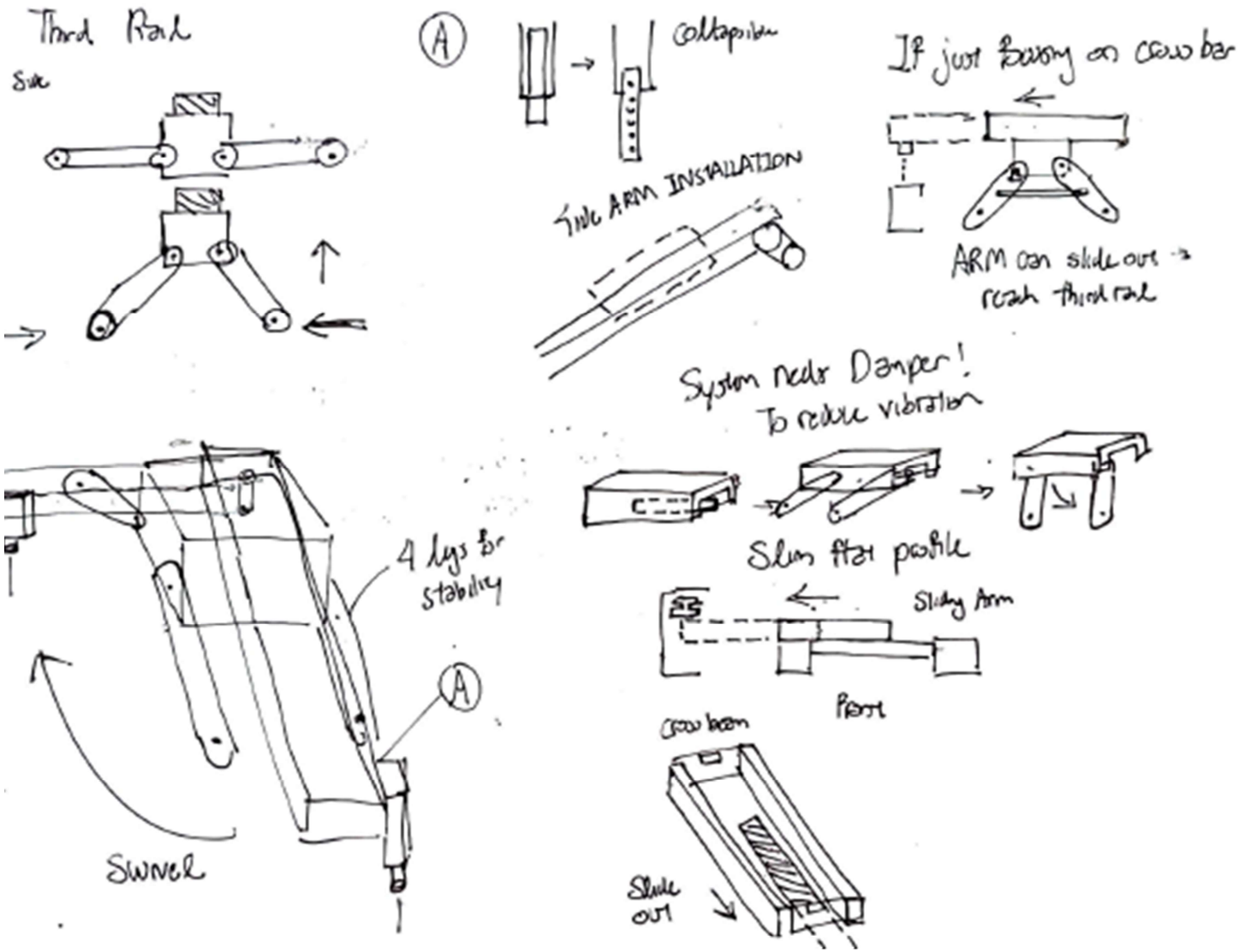

SKETCH 51 BY NICHOLAS, SHOWING POSSIBLE MECHANISMS FOR MEASURING THIRD RAIL SAG

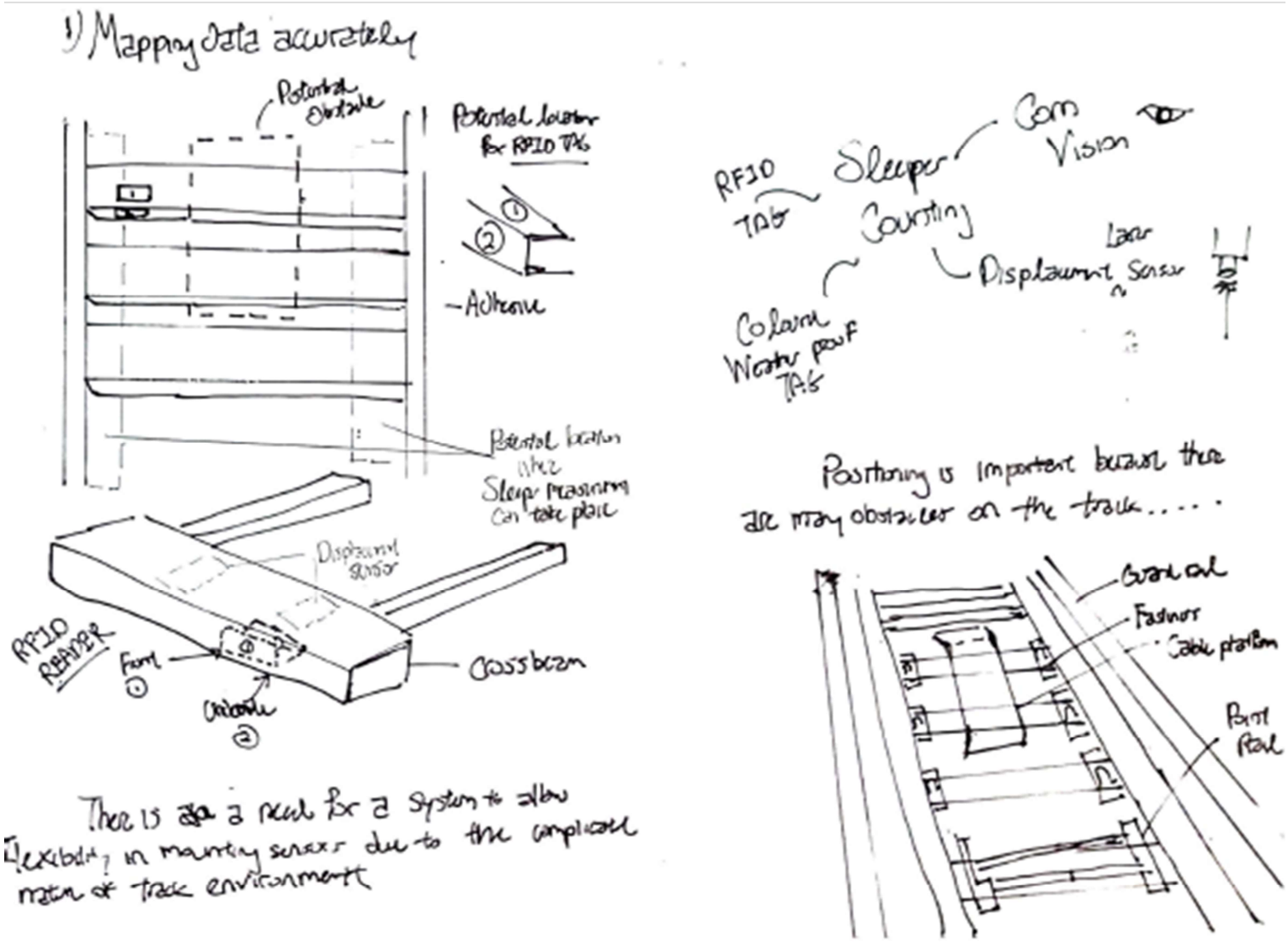

SKETCH 52 BY NICHOLAS, SHOWING POSSIBLE RFID READER AND TAG POSITIONING AND ORIENTATIONS

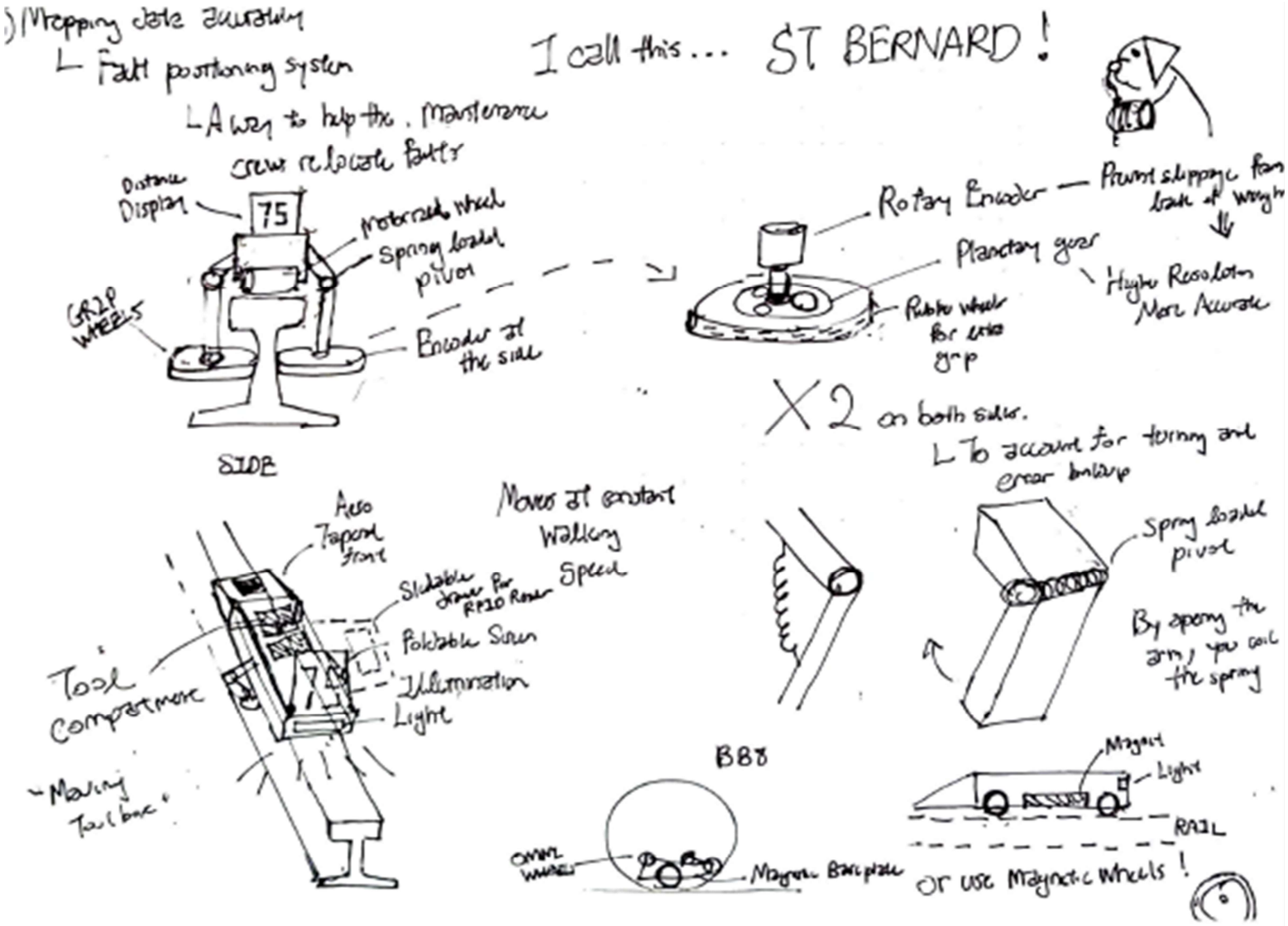

SKETCH 53 BY NICHOLAS, SHOWING A POSSIBLE CONCEPT FOR THE POSITION RE-IDENTIFICATION DEVICE

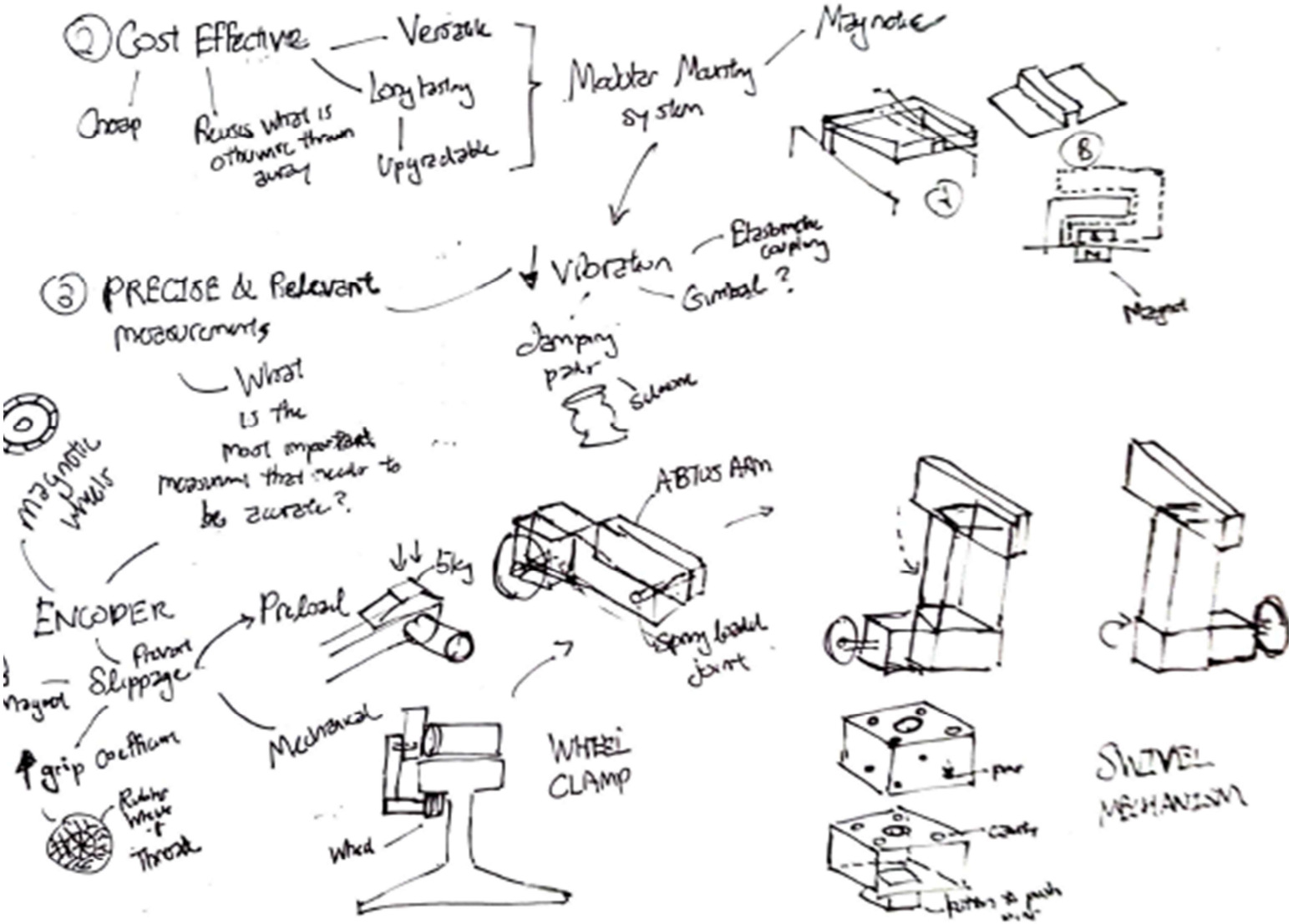

SKETCH 54 BY NICHOLAS, SHOWING A LATCHING MECHANISM THAT CAN ALLOW A DEVICE TO LATCH ON AND BALANCE ON A RAIL

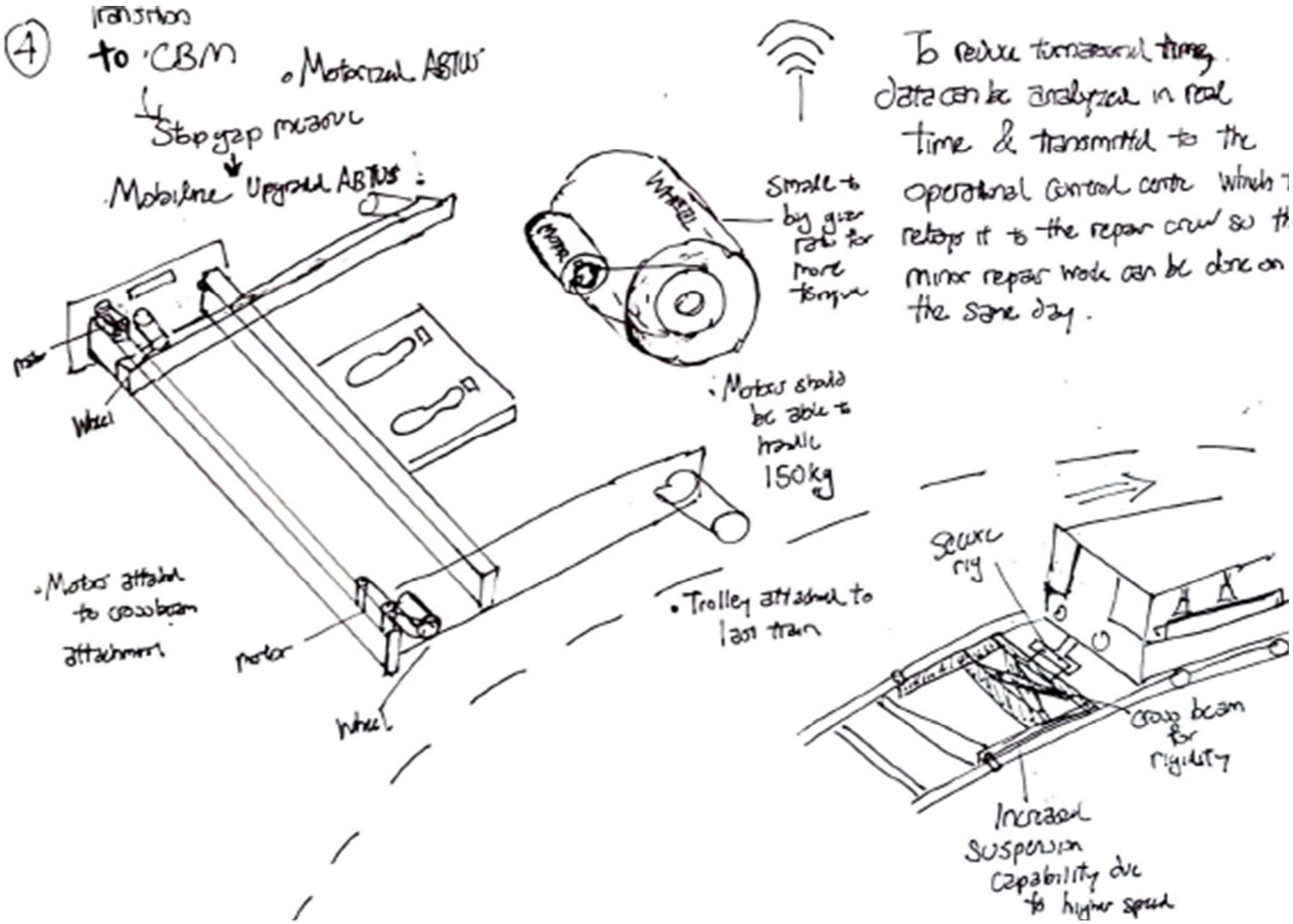

SKETCH 55 AND SKETCH 56 BY NICHOLAS, SHOWING A MOTORIZED VERSION OF THE GRAW REPLACEMENT AND A TROLLEY THAT CAN LATCH ON TO TRAINS TO CONDUCT MEASUREMENTS

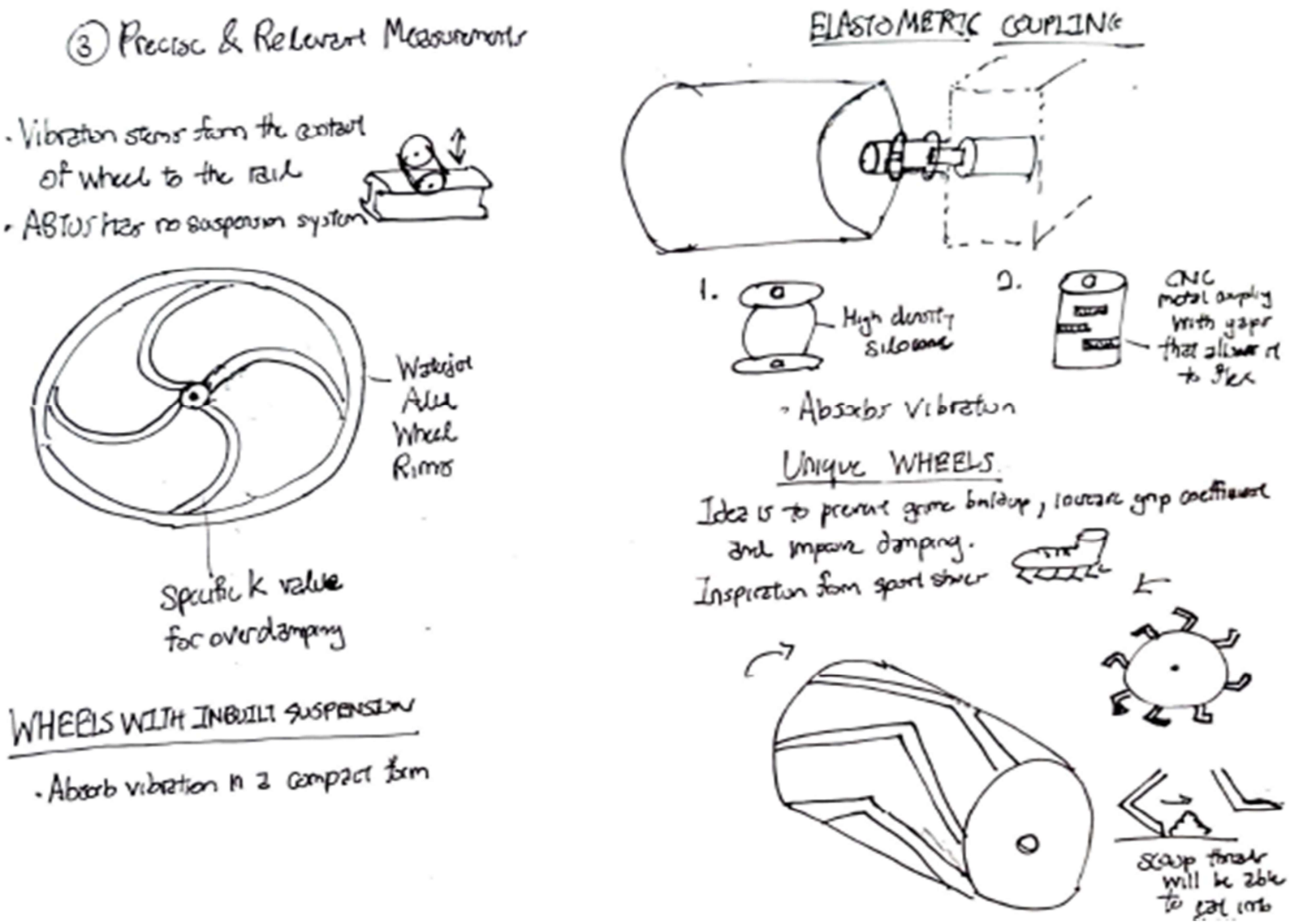

SKETCH 57 BY NICHOLAS, SHOWING DAMPENING SYSTEMS THAT WILL DECREASE THE VIBRATION OF THE DEVICES ON THE RAILS.

Annex 11 Pugh Charts

			Concept No.	1	2	3	4	5	6	7	8	9	10	
			Concept Illustration					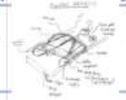		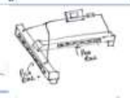				
	Device for Measuring Rail Head Wear, Track Geometry and Position. Additional Considisderations: Capable of acting as a prototyping platform for additional sensors		Concept Name	BASELINE 1 -ABTUS Trolley	BASLINE 2 - GRAW Trolley (industry level comparison)	Upgraded ABTUS Trolley Mounted with Sensor Array	Unmanned Aerial Vehicle with Camera Vision and Laser Sensors	Wheeled Motorbike Based Ground Vehicle with Side-Support and Sensor Array	Wheeled Motorbike Based Self-Balancing Unmanned Ground Vehicle with Sensor Array	GRAW Fixed T-Frame with Modular Sensor Mounts	Two Single Rail Robots with Clamps, Magnetic Wheels, and Sensor Array	Upgraded ABTUS with Rotating Single Laser Sensor for 2D Rail Profiling	Motorized High Speed Autonomous Train Following Carriage with Sensor Array (Stored in Storeroom not Depot)	Criteria Definition for Scoring
Primary Need/General Constraint	Criteria	Stake	Concept Criteria Scores range from 1 (poor) to 10 (excellent). N/A refers	Scoring (1-10)	Scoring (1-10)	Scoring (1-10)	Scoring (1-10)	Scoring (1-10)	Scoring (1-10)	Scoring (1-10)	Scoring (1-10)	Scoring (1-10)	Scoring (1-10)	
Primary Need 1. The solution can accurately map the data collected to chainage	Position Identification Accuracy	55		5	5	9	4	9	9	9	9	9	7	Accuracy at which the the concept will be able to identify locations and positions
	Sensor Data Accuracy	55		5	5	5	1	4	3	5	4	2	5	Sensor data accuracy (based on the type of sensors mounted on the device)
Primary Need 2. The solution is cost-effective	Maintenance Cost	35		5	5	9	6	7	7	9	7	8	7	Cost of maintaining the concept in the long term (2 years)
	Capital Cost	35		5	5	9	4	7	7	6	7	10	4	Capital costs of the concept relative to functions
	Operating Costs	21		5	5	6	4	6	6	6	6	6	8	Potential cost-effectiveness of operations based on manpower
Primary Need 3. The solution provides precise and relevant measurements	Rail Head Wear Data Accuracy	40		0	5	5	1	4	4	5	4	3	5	Accuracy at which the the concept will be able to identify rail head wear
	Track Geometry Data Accuracy	40		5	5	5	1	4	4	5	4	5	5	Accuracy at which the the concept will be able to identify track geometry
Primary Need 4. The solution can help SMRT's rail maintenance process transition from Schedule-Based Maintenance to Condition-Based	Potential for Autonomous Development	42		5	5	9	7	9	9	9	9	9	10	Ease at which fully-autonomous function may be developed for the concept
	Travel Speed	28		5	5	5	8	7	7	5	7	5	10	Potential maximum speed of the device (in intended operation mode)
Primary Need 5. The solution is sustainable	Ease of Maintenance	24		5	5	9	3	6	6	9	6	7	6	Ease at which SMRT can maintain the device in-house
	Durability	18		5	5	5	1	4	4	5	4	4	6	Ability to conduct works repeatedly without requiring maintenance
	Ruggedness	18		5	5	5	1	3	3	5	3	4	6	Potential to withstand impact without sustaining damage
Primary Need 6. The solution detects more track	Modularity/Developmental Potential	25		5	5	9	7	6	6	9	7	9	10	Potential for the concept to be developed/advanced
	Sensor Positioning Flexibility (Affects Project Flexibility)	25		5	10	10	3	8	8	9	8	10	10	Flexibility at which sensors can be re-positioned
Primary Need 7. The solution is easy to set up and	Reliability of System	6		5	5	6	2	4	3	6	4	4	3	Likelihood of the concept failing during operations
	Portability	4		5	5	5	9	7	7	5	6	8	2	Ease at which the device is transported by personnel
	Assembly Difficulty	5		5	5	4	7	6	6	5	6	4	9	Assembly complexity and time requirements for operations
	User Interface	5		5	5	7	7	7	7	7	7	7	7	User interface quality
	Data Transmission Flexibility	4		5	5	7	1	7	7	7	7	7	6	Flexibility at which data can be transferred from the device to a user
	Assembly Time	4		5	5	4	3	5	5	5	4	4	10	Time required to assemble the device before maintenance can be carried out, shorter times result in higher scores
	Assembly Requirements	4		5	5	4	3	4	4	5	4	4	10	Number of parts and steps to full-assemble the device before maintenance can be carried out, fewer steps/parts result in higher scores
	Disassembly Time	4		5	5	4	3	5	5	5	5	4	1	Time required to disassemble the device(s) fully
	Operational Difficulty	2		5	5	7	10	10	10	5	4	7	10	Difficulty in operating the device, higher scores imply less difficulty
	Aesthetics	2		5	5	5	6	6	6	4	6	5	7	Potential for aesthetic development
General Constraints	Sensor Data Types	31		5	5	5	1	4	3	5	4	2	5	Types of relevant data the concept is capable of collecting
	Data Processing Speed	20		5	5	5	2	2	2	5	2	5	5	Amount of processing power available for data processing (based on type of processor mounted on device and tasks allocated to the processors)
	Data Transmission Speed	10		5	5	5	5	5	5	5	5	5	5	Speed at which data can be transferred from the device to a user
	Power Consumption	20		5	5	5	1	5	4	5	4	4	1	Amount of power required to complete 4hours of operations
	Environmental Friendliness	20		5	5	10	1	3	2	2	2	10	1	Amount of materials and power consumed to construct and operate device, higher scores imply more environmentally friendly
	Development Time (Affects Project Overall Success Rate)	102		5	5	9	3	7	7	9	7	5	1	Likelihood of meeting all needs, constraints and testing requirements given project time limitations, team's skillset and project resources
	Battery Life (10 is achieved once battery life exceeds 7 hours)	102		5	5	10	1	10	10	10	10	10	5	Ability of the concept to achieve an endurance of 7 hours
	Safety Measures	82		5	5	5	1	5	5	5	5	5	1	Potential for the concept to cause damage to the environment or personnel, Score of 1 implies high potential
	Volume	31		5	5	4	9	7	6	5	7	4	1	Volume taken up by the device(s)
	Compactability	31		5	5	4	6	4	4	5	4	5	1	Volume reduction between compacted and assembled states
	Weight	51		5	5	4	7	6	6	5	6	4	1	Weight of the fully-assembled device(s)
			Concept Score:	4805	5130	6931	3328	6243	6080	6765	6208	6112	4573	
			Concept Ranking	9	7	1	10	3	6	2	4	5	9	

Negative Criteria Interplay: Increase Travel Speed = Motorized = Increased Development Time, Increased Weight, Shorter Battery Life, Increased Capital Costs, Increased Power Consumption

Postive Criteria Interplay: Compact all Components onto Prototyping Platform = Smaller Volume; Remove/Install all Sensors together with Platform = Reduced Disassembly/Assembly Time, Reduced Assembly Difficulty, Reduced Assembly Req.

Solutions 3 and 7 have been identified to be the best ranking solutions. Once the best concepts have been identified in the first iteration of concept analysis, our team proceeds to the second iteration which seeks to address the low scoring criteria through different measures such as: (i) combining the concept with aspects of other concepts without negatively impacting other criteria too significantly (ii) changing the system or form of the concept

FIGURE 104. PUGH CHART FOR THE GRAW TROLLEY REPLACEMENT SYNERGY GROUP'S CONCEPTS

		Concept No.	1	2	3	4	5	6	7	8	9	10	
	Mapping System for Identification of Position and Mapping Data (Paired with Device Concepts and Rectification)	Concept	BASELINE- Unstandardized Chainage Markers (Located at Approximately 100m Interval)	Colored Markers on Sleepers in Combination with Color Sensor	RFID Tags on Sleepers in Combination with RFID Reader	Sleeper Counter using Laser Sensor in Combination with RFID Tags and RFID Reader	Sleeper Counter using Ultrasonic Sensor in Combination with RFID Tags and RFID Reader	Standardized Chainage Markers (Located at 100m Interval)	GPS in combination with RFID Reader and Sleeper Counter	GPS in Combination with Sleeper Counter	GPS in combination with IMU and RFID Tags	Encoder in combination with RFID Tags and Sleeper Counter	Criteria Definition for Scoring
	Criteria	**Stake**	Scoring (1-10)	Scoring (1-10)	Scoring (1-10)	Scoring (1-10)	Scoring (1-10)	Scoring (1-10)	Scoring (1-10)	Scoring (1-10)	Scoring (1-10)	Scoring (1-10)	
Primary Need 1.The solution can accurately map the data collected to chainage	Position Identification Accuracy	75	5	2	6	9	8	6	6	3	7	10	Accuracy at which the the system will be able to identify locations and positions
	Sensor Accuracy	75	5	4	9	9	6	5	9	3	9	10	Highest resolution of the sensors being used in the
Primary Need 2. The solution is cost-effective	Maintenance Cost	43	5	4	8	2	5	5	4	4	4	4	Cost of maintaining the system in the long term (2 year cycles)
	Capital Cost	43	5	10	2	1	3	5	1	1	4	4	Capital costs of the system (fixed starting costs)
	Implementation Time	35	5	4	3	2	2	5	2	4	4	2	Time required for SMRT to complete network wide system implementation
Primary Need 4. The solution can help SMRT's rail maintenance process transition from Schedule-Based Maintenance to Condition-Based Maintenance	Potential for Autonomous Development	41	5	9	9	9	9	5	9	9	9	9	Ease at which fully-autonomous function may be developed for the concept
	Travel Speed	27	5	7	10	10	10	5	10	10	10	8	Potential maximum speed of the device (in intended operation mode)
	Modularity/Developmental Potential	27	5	10	10	10	10	5	4	4	4	10	Potential for the concept to be developed/advanced
Primary Need 5. The solution is sustainable	Ease of Maintenance	17	5	8	9	9	9	5	9	9	9	9	Ease at which SMRT can maintain the system in-house
	Durability	13	5	3	9	9	9	5	9	10	9	9	Ability to conduct works repeatedly without requiring maintenance
	Ruggedness	13	5	3	9	9	9	5	9	10	9	9	Potential to withstand impact without sustaining
	Ease of System Expansion	17	5	9	8	8	8	5	3	3	3	8	Ease at which SMRT can expand the system to cover its entire network
	System Transferability	21	5	10	10	8	8	5	1	1	1	8	Ease at which the system can be adapted for other rail maintenance applications
Primary Need 7. The solution is easy to set up and use	Reliability of System	9	5	2	6	9	8	6	6	2	7	10	Likelihood of the system failing during operations
	User Interface	7	5	7	8	8	8	5	8	8	8	8	User Interface quality
	Data Transmission Flexibility	6	5	9	9	9	9	5	9	9	9	9	Flexibility at which data can be transferred from the device to a user
	Set-Up Time	5	5	4	4	4	4	5	4	4	4	4	Time required to ready systems
	Set-Up Requirements	5	5	4	4	4	4	5	4	4	4	4	Steps required to ready systems
	Shutdown Time	5	5	5	4	4	4	5	4	4	4	4	Steps required to shutdown systems
	Aesthetics	3	5	7	8	8	8	5	8	8	8	8	Potential for aesthetic development
	Degree of Structural Modifications	8	5	9	8	8	8	5	8	10	8	8	Extent of changes made to the rail infrastructure, less change equates to higher score
	Indicator Positioning Flexibility	6	5	9	7	9	9	5	7	5	7	9	Flexibility at which the indicators for position can be positioned along rail infrastructure
General Constraints	Data Processing Speed	23	5	8	9	9	9	5	9	9	9	9	Amount of processing power available for data processing (based on type of processor mounted on device and tasks allocated to the processors)
	Data Transmission Speed	11	5	9	9	9	9	5	9	9	9	9	Speed at which data can be transferred from the device to a user
	Power Consumption	23	5	3	4	5	4	5	4	4	4	4	Amount of power required to complete 4hours of operations
	Environmental Friendliness	23	5	4	3	1	2	5	2	3	2	1	Amount of materials and power consumed to construct device and maintain system, higher scores imply more environmentally friendly
	Development Time (Affects Project Overall	114	5	9	4	3	3	5	4	4	4	3	Likelihood of meeting all needs, constraints and testing requirements given project time limitations, team's skillset and project resources
	Battery Life (10 is achieved once battery li	114	5	5	4	3	3	5	3	3	3	4	Ability of the concept to achieve an endurance of 7
	Weight	57	5	5	4	3	3	5	4	4	4	3	Weight of the fully-assembled device(s)
	Volume (Position Identification Sensors)	68	5	4	4	3	3	5	4	4	5	3	Volume taken up by the device(s)
	Volume (Position Identification Indicators	68	5	9	8	8	8	5	8	10	8	8	Volume taken up by the indicator(s)
		Concept Score	5010	6139	6079	5589	5495	5094	5256	4804	5607	6000	
		Concept Ranking	9	1	2	5	6	8	7	10	4	3	

FIGURE 105. PUGH CHART FOR THE MAPPING SYSTEM SYNERGY GROUP'S CONCEPTS

		Concept No.	1	2	3	4	5	6	7	8	
		Concept Illustration		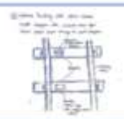			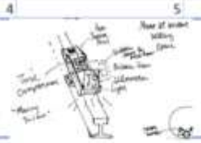				
	Method for Re-identification of Position (Maintenance Work Location Detection)	Concept Name	Unstandardized Chainage Markers (Located at Approximately 100m Interval)	RFID Tags paired with Neon Standardized Chainage Markers + Manual Sleeper Counting	Walking Stick Encoder + RFID Reader + Laser Sleeper Counting	Robot with Encoder + RFID Tags +Laser Sleeper Counting	Shelled Robot with + Encoder + RFID Reader + Laser Sleeper Counting	Spherical Robot with Magnetic Strip + Laser Sleeper Counting + RFID Reader + Holographic Display	Self-Balancing Robot + Laser Sleeper Counting + RFID Reader	Hand-held RFID Reader + Manual Sleeper Counting	Criteria Definition for Scoring
	Criteria	Score	Scoring (1-10)	Scoring (1-10)	Scoring (1-10)	Scoring (1-10)	Scoring (1-10)	Scoring (1-10)	Scoring (1-10)	Scoring (1-10)	
Primary Need 1.The solution can accurately map the c	Position Identificatior	66	5	6	8	8	9	7	7	6	Accuracy at which the the concept will be able t
	Sensor Data Accuracy	66	5	5	8	8	8	7	6	6	Sensor data accuracy (based on the type of sen
Primary Need 2. The solution is cost-effective	Maintenance Cost	41	5	5	4	3	3	3	2	5	Cost of maintaining the concept in the long terr
	Capital Cost	41	5	5	4	3	3	3	3	4	Capital costs of the concept relative to function
	Operating Costs	25	5	5	5	9	9	8	9	5	Potential cost-effectiveness of operations base
Primary Need 4. The solution can help SMRT's rail ma	Potential for Autonom	50	5	5	8	8	8	8	8	5	Ease at which fully-autonomous function may b
	Travel Speed	33	5	5	5	9	9	10	8	5	Potential maximum speed of the device (in inte
Primary Need 5. The solution is sustainable	Ease of Maintenance	28	5	5	4	3	3	3	2	5	Ease at which SMRT can maintain the device in-
	Durability	21	5	5	5	4	4	4	3	5	Ability to conduct works repeatedly without req
	Ruggedness	21	5	5	5	4	4	4	3	5	Potential to withstand impact without sustainii
Primary Need 6. The solution detects more track feat	Modularity/Developm	30	5	5	8	9	10	10	10	6	Potential for the concept to be developed/adva
	Sensor Positioning Fle	30	5	5	5	10	10	8	8	10	Flexibility at which sensors can be re-positione
Primary Need 7. The solution is easy to set up and us	Reliability of System	7	5	6	8	8	9	9	6	7	Likelihood of the concept failing during operati
	Portability	5	5	5	4	4	4	4	4	4	Ease at which the device is transported by pers
	Assembly Difficulty	6	5	5	5	5	5	4	3	5	Assembly complexity and time requirements fo
	User Interface	6	5	6	7	7	8	9	8	6	User interface quality
	Data Transmission Fle	5	5	5	5	8	8	8	8	6	Flexibility at which data can be transferred fron
	Assembly Time	4	5	5	4	4	4	4	3	5	Time required to assemble the device before m
	Assembly Requiremen	4	5	5	5	4	4	4	3	6	Number of parts and steps to full-assemble the
	Disassembly Time	4	5	5	5	4	4	4	4	5	Time required to disassemble the device(s) ful
	Operational Difficulty	3	5	5	6	6	6	7	4	6	Difficulty in operating the device, higher scores
	Aesthetics	3	5	5	7	8	8	9	6	5	Potential for aesthetic development
General Constraints	Sensor Data Types	31	5	5	8	8	8	7	6	6	Types of relevant data the concept is capable o
	Data Processing Speed	20	5	5	6	8	8	7	9	6	Amount of processing power available for data
	Data Transmission Sp	10	5	5	6	8	8	8	6	6	Speed at which data can be transferred from th
	Power Consumption	20	5	5	4	3	3	3	2	5	Amount of electrical power required to complet
	Environmental Friendl	20	5	5	4	3	3	3	3	4	Amount of materials and power consumed to c
	Development Time (Af	102	5	5	4	3	3	2	2	5	Likelihood of meeting all needs, constraints ar
	Battery Life (10 is achi	102	5	5	4	4	4	3	4	4	Ability of the concept to achieve an endurance
	Safety Measures	82	5	5	5	4	4	4	3	5	Potential for the concept to cause damage to th
	Volume	31	5	5	4	4	4	4	4	5	Volume taken up by the device(s)
	Compactability	31	5	5	6	6	6	5	6	5	Volume reduction between compacted and ass
	Weight	51	5	5	4	3	3	3	4	5	Weight of the fully-assembled device(s)
		Concept Score	4995	5074	5382	5437	5546	5016	4810	5232	
		Concept Ranking	6	5	3	2	1	7	8	4	

d = Motorized = Increased Development Time, Increased Weight, Shorter Battery Life, Increased Capital Costs, Increased Power Consumption

Postive Criteria Interplay: Encoder alone builds up error as distance travelled increases. RFID Reader can reset chainage error automatically at the interval it is s

best ranking solutions. Once the best concepts have been identified in the first iteration of concept analysis, our team proceeds to the second iteration which seeks to address the low scoring criteria through different measures such as: (i) combining the concept with aspects of other concepts without negatively impacting other criteria too significantly; (ii) changing the system c

the position identification problem is always going to cost more, require more maintenance, and require a lot more development time as compared to static solution to the problem such as chainage markers. By combining an improved static solution with the robotic solutions, it is possible to guarantee an increasee in position identification accuracy, albeit at a setback in cos

implementation of the static solution is cheap and quick, it is feasible to combine concepts in this context

FIGURE 106. PUGH CHART FOR THE DEFECT RE-IDENTIFIER SYNERGY GROUP'S CONCEPTS

Annex 12 Static Stress Analysis

12.1 Static Stress Analysis Performed on ORCA's Side Plate Bolts

An initial concern with the proposed design of the upgraded trolley is whether the four M6 bolts on each side of the crossbar would be able to withstand the increased load from the new aluminum extrusion platform where additional sensors would be installed. Static stress simulation and engineering calculations were used to check whether the screws would fail under the new loading conditions.

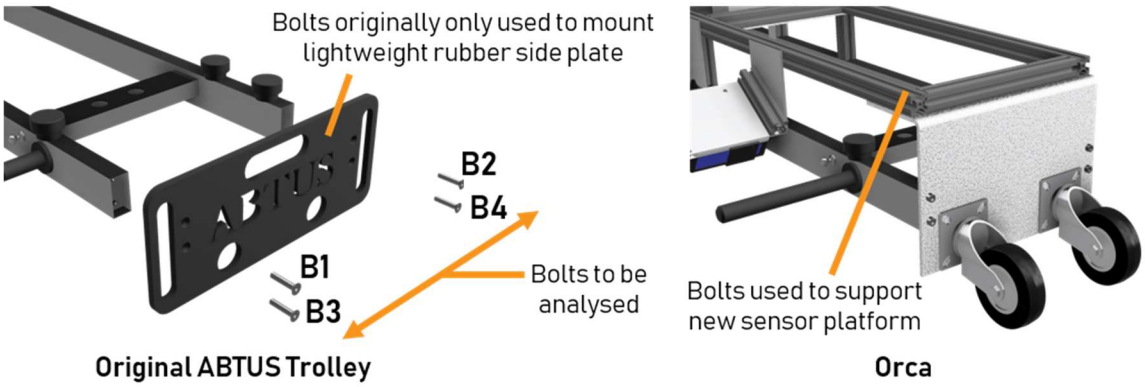

FIGURE 107. DIAGRAM DETAILING THE BOLTS (LABELLED B1-B4) THAT WERE ANALYSED

12.2 Methodology

12.2.1 Finite Element Analysis

Static stress Finite Element Analysis (FEA) was performed using Autodesk Fusion 360's simulation workspace. Loading from the weight of the sensors and the platform itself were both factored in the simulation, as shown in **Figure 108**. The reaction forces experienced by the individual screws were obtained as the results of the FEA study, which were needed for the next step of the analysis.

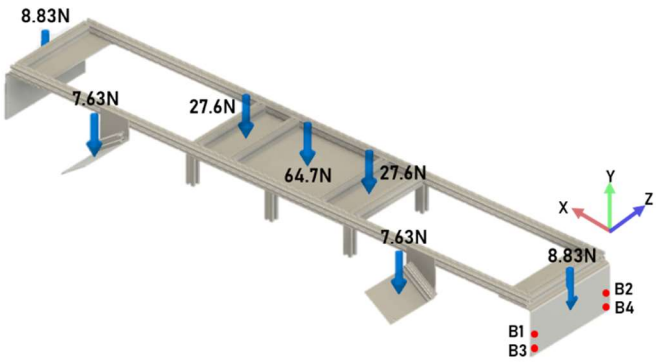

FIGURE 108. DIAGRAM INDICATING LOADS APPLIED TO SENSOR PLATFORM DURING FEA

BOLT	F_x/N	F_y/N	F_z/N
B1	-0.69	4.41	01.00
B2	-1.73	0.57	-0.56
B3	-0.21	2.15	-1.25
B4	-0.41	1.20	-0.94

FIGURE 109. TABLE OF RESULTS FROM FEA

12.2.2 Engineering Calculations

From the results in **Figure 109**, it was determined that bolt B1 would experience the strongest reaction force, and a loading diagram was drawn for it (**Figure 110**). Tensile stress by the force in Z-axis, σ_{F_z} , and stress caused by bending moment M, σ_M , were calculated with the equations below.

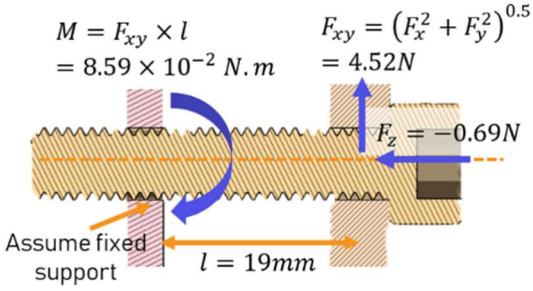

FIGURE 110. LOADING DIAGRAM OF B1

$$\sigma_{F_z} = \frac{F_z}{\pi(0.5d_m)^2} = 3.86 \times 10^{-2} MPa \tag{1}$$

$$\sigma_M = \frac{32M}{\pi d_m^3} = 8.06MPa \tag{2}$$

Where $d_m = 4.77mm$ is the minor diameter of a M6 screw.

With these two stresses, the maximum shear stress experienced by the screw τ_{max}, was calculated. The safety factor S_F of bolt B1 could then be calculated with the Tresca criterion.

$$\tau_{max} = \sqrt{\left(\frac{\sigma_z - \sigma_y}{2}\right)^2 + \tau_{zy}^2} = \sqrt{\left(\frac{(\sigma_{F_z} + \sigma_M) - 0}{2}\right)^2 + 0} = 4.03MPa \tag{3}$$

$$S_F = \frac{0.5S_y}{\tau_{max}} = 29.8 \tag{4}$$

Where σ_z, σ_y, refers to the tensile stress in the Z and Y axis respectively while τ_{zy} refers to the shear stress along the ZY plane. $S_y = 240MPa$ refers to the yield strength of a M6 bolt (SAE Class 4.6).

12.2.3 Analysis Conclusion

In conclusion, from the FEA analysis and calculations, screw S1 has a safety factor of 29.8, which means it can withstand around 30 times its new loading before it fails. Therefore, the structure is deemed structurally sound and the design can proceed further in this direction.

Annex 13 Small Scale Prototype

Our first concept, magnetic wheels were inspired by hull cleaning robots in the maritime industry that also used magnets attached to its tracks to adhere to the ship's hull. In addition, this magnetic wheel concept takes advantage of the ferrous properties of the rail. As you can see, we have made two-wheel prototypes, one with a single ceramic magnet insert and one with multiple neodymium magnet inserts along its perimeter. Despite the differences in configuration, both wheels can roll smoothly while maintaining a constant contact force with the magnetic surface. The magnetic wheels main strength is that it is space saving. The magnets are small, making it easy to integrate into the existing Abtus encoder wheel. With no moving parts, fabrication and implementation is made simple. The main flaw that we have identified is that the magnets are susceptible to environmental conditions such as corrosion and temperature fluctuation. To mitigate this, it is imperative that the right magnet material should be selected. In this case, samarium cobalt should be used as it is corrosion and temperature resistant.

FIGURE 111. MAGNETIC WHEEL CONCEPT

Our second concept, the side grip mechanism is inspired by rollercoaster carriage wheels. It has a spring embedded in the hinge that creates a gripping force along the side rail profile. Our main learning point was discovered when we tested the mechanism at our test rail site behind the IDC (International Design Centre). We quickly discovered that the effectiveness of the concept was limited as the side wheels no longer gripped the sides but thin air instead. This was because the rails at our test site has already experienced rail wear where the top surface has been worn down. This shows that its effectiveness is entirely dependent on rail wear condition. Utilizing what we have learnt from this, we created our third prototype.

FIGURE 112. SIDE GRIP CONCEPT

The third concept the tri-grip mechanism. It was inspired by the C clamps that can be found in the fabrication lab. By gripping the rails at the bottom rather than the sides, the overall structure should be more stable.

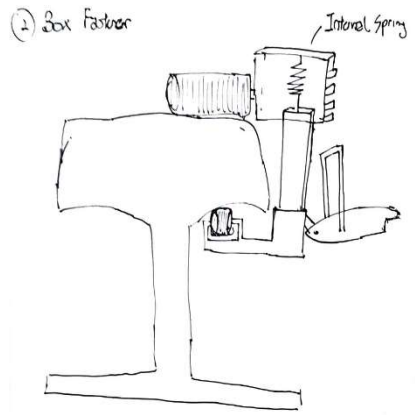

FIGURE 113. SKETCH OF WHEEL CLAMP CONCEPT

FIGURE 114. 3D PRINTED PROTOTYPE OF TRI-GRIP CONCEPT

Unlike the side grip, the tri-grip mechanism castor wheels are in contact with bottom profile of the rail head, an area that does not experience rail wear. The result is a mechanically stable system that is able to work throughout different rail conditions. The main drawback of this idea is that it has multiple moving parts that increase fabrication complexity.

12.1.1 Conclusion

Each of our designs have potential for implementation. However, more testing needs to be done on a larger prototype to assess its effectiveness. We can also conclude that the magnetic wheel

concept is the most ideal concept that can be used for both the ORCA and ORCA mini due to its ease of implementation. The tri grip mechanism will be difficult to implement in a manner that does not permanently alter the existing structure and compromise the collapsibility of the trolley.

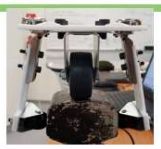

	MAGNET WHEELS	SIDE GRIP MECHANISM	TRI GRIP MECHANISM
DESCRIPTION	The utilization of magnets to increase friction by making us of the ferrous properties of the rail	The utilization of a torsional spring to create downward force	The utilization of a spring clamp on the under sides of the rail for increased contact force
STRENGTHS	Minimize space taken up by integrating it within the wheel No moving parts	Collapsible	Collapsible Mechanically Stable
WEAKNESSES	High cost Loss of magnetism due to impact	Size of the mechanism 3D prints less mechanically stable	Size of the mechanism 3D prints less mechanically stable
EASE OF FABRICATION	+ +	+ +	+

Conclusion: 1) Designs have potential but still need more development to become a functional solution
2) Magnetic wheels design may be ported over to Orca to reduce encoder slippage

FIGURE 115. SMALL SCALE PROTOTYPE SUMMARY

Annex 14 Sizing of ORCA Mini Springs and Wheel Motor Hub

14.1 Sizing of Springs

The objective of these calculations is to size the springs on Orca Mini's track latching mechanism. The springs must be strong enough to grip the track sufficiently to prevent the device from slanting due to the weight of the cantilever which houses the sleeper counter and RFID reader.

14.1.1 Loading Diagram

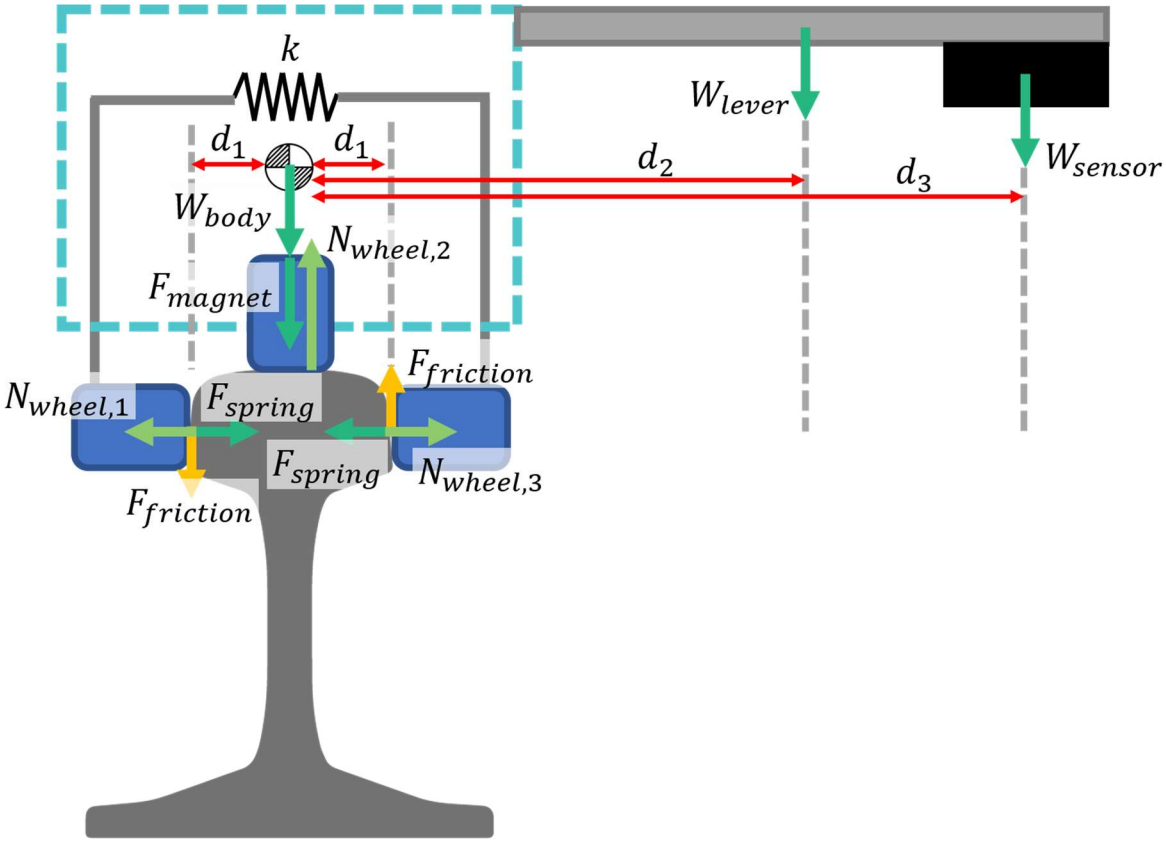

FIGURE 116. LOADING DIAGRAM OF THE ORCA MINI ON THE VERGE OF SLIPPING DUE TO THE WEIGHT ON THE CANTILEVER.

14.1.2 Nomenclature

Symbol	Description	Unit	Value (If any)
d_1	As labelled in Fig.1	m	0.038
d_2	As labelled in Fig.2	m	0.24
d_3	As labelled in Fig.3	m	0.39
L_0	Free length of spring	m	0.08
L_1	Extended length or spring	m	0.1

k	Spring constant of a single spring	Nmm^{-1}	0.6826
F_{magnet}	Force exerted by 5 magnets[16]	N	100.7
F_{spring}	Force exerted by a single spring	N	13.65
$F_{friction}$	Frictional force on wheels 1 and 2	N	-
W_{body}	Weight of Orca Mini's main body	N	55
W_{lever}	Weight of cantilever	N	1.962
W_{sensor}	Weight of sensors on cantilever[17] [18] [2], [3]	N	1.962
$N_{wheel,x}$	Normal reaction force acting on a single wheel on side x whereby 1,2,3 refer to the left, middle and right sides respectively.	N	-
μ	Static coefficient of friction of skateboard wheels[19]	-	0.7
Δx	Extension by a single spring	m	-

[16] K&J Magnetics, Inc. n.d. *The Original K&J Magnet Calculator.* Accessed June 16, 2018. https://www.kjmagnetics.com/calculator.asp.

[17] Identix. n.d. Identix miniPad. Accessed June 16, 2018. https://www.identix.us.com/minipad.

[18] Riftek. n.d. Laser Triangulation Sensor. Accessed June 16, 2018. https://riftek.com/eng/products/~show/sensors/laser-triangulation-sensor

[19] Sunray Inc. n.d. Understanding Polyurethan Coefficient of Friction. Accessed June 16, 2018. https://www.slideshare.net/SunrayInc/understanding-polyurethane-coefficient-of-friction.

14.1.3 Calculations

Since the Orca Mini is stationary, the equations of static equilibrium (1) and (2) can be applied. Moments is taken to be about the centre of gravity of the Orca Mini.

$$\sum \vec{F} = \vec{0} \tag{1}$$

$$\sum \vec{M} = \vec{0} \tag{2}$$

Since the springs exert equal and opposite forces on the left and right wheels, the following relation can be established by resolving the horizontal component of (1).

$$N_{wheel,1} = N_{wheel,2} = F_{spring} \tag{3}$$

Considering that a total of 4 springs and 6 wheels (2 on each side) would be used, the vertical component of (1) and equation (2) can be expressed as the following.

$$N_{wheel,2} = 0.5\ (W_{lever} + W_{sensor} + W_{body} + F_{magnet}) \tag{4}$$

$$F_{friction} = \frac{d_2 W_{lever} + d_3 W_{sensor}}{4d_1} \tag{5}$$

(4) is not critical since $N_{wheel,2}$ does not contribute to any moment on the system. On the other hand, since $F_{friction}$ is dependent on spring parameters (5) and be expressed as

$$F_{friction} = \mu N_{wheel,1} = \mu k \Delta x = \frac{d_2 W_{lever} + d_3 W_{sensor}}{4d_1} \tag{6}$$

$$k(L_1 - L_0) = \frac{d_2 W_{lever} + d_3 W_{sensor}}{4\mu d_1} \tag{7}$$

By substituting the values of the various variables in (7), a condition that ensures the Orca Mini does not tilt can be established in relation to the spring's k and L_0 specifications. Using this equation, an expression for safety factor (SF) can be obtained.

$$k(L_1 - L_0) \geq 11.6 \tag{7}$$

$$SF = \frac{k(0.16 - L_0)}{11.6} \geq 1 \tag{8}$$

14.1.4 Spring Selection

The spring SSE-055E-8 from Shincoil[20] was chosen with $L_0 = 0.069m$ (including side hooks) and $k = 787.7\ Nm^{-1}$. Based on equation (8), using this spring would have a safety factory of 1.3, which ensures that if would be able to perform its function effectively.

Fig.2 Picture of SSE-140160-8 Spring

Shincoil®

EXTENSION SPRINGS

MUSIC WIRE AND STAINLESS STEEL

Part Number	Metric							Inches						
	Outside Dia. De	Wire Dia. d	Free Length Lo	Spring Rate k	Initial Tension Pi	Safe Cyclic Load P1	Safe Cyclic Extended Length L1	Outside Dia. De	Wire Dia. d	Free Length Lo	Spring Rate k	Initial Tension Pi	Safe Cyclic Load P1	Safe Cyclic Extended Length L1
	mm	mm	mm	N/mm	N	N	mm	in	in	in	lb/in	lb	lb	in
SSE-049E-1			31.75	2.0642			48.51			1.250	11.787			1.910
SSE-049E-2			38.10	1.2698			65.35			1.500	7.251			2.573
SSE-049E-3			44.45	0.9173			82.17			1.750	5.238			3.235
SSE-049E-4			50.80	0.7002			100.22			2.000	3.998			3.946
SSE-049E-5	12.70	1.25	57.15	0.5776	3.9030	38.506	117.06	0.500	0.049	2.250	3.298	0.877	8.657	4.609
SSE-049E-6			63.50	0.4900			134.12			2.500	2.798			5.280
SSE-049E-7			69.85	0.4200			152.25			2.750	2.398			5.994
SSE-049E-8			76.20	0.3744			168.62			3.000	2.138			6.638
SSE-049E-9			88.90	0.3061			201.94			3.500	1.748			7.950
SSE-049E-10			101.60	0.2571			236.20			4.000	1.468			9.299
SSE-055E-0			31.75	3.6137			44.62			1.250	20.635			1.757
SSE-055E-1			34.93	2.7311			51.96			1.375	15.595			2.046
SSE-055E-2			38.10	2.2763			58.53			1.500	12.998			2.304
SSE-055E-3			44.45	1.6458			72.71			1.750	9.398			2.863
SSE-055E-4			50.80	1.2956			86.70			2.000	7.398			3.413
SSE-055E-5			57.15	1.0679			100.70			2.250	6.098			3.965
SSE-055E-6	12.70	1.40	63.50	0.9103	5.7761	52.288	114.59	0.500	0.055	2.500	5.198	1.299	11.755	4.512
SSE-055E-7			69.85	0.7877			128.90			2.750	4.498			5.075
SSE-055E-8			76.20	0.6826			144.34			3.000	3.898			5.682
SSE-055E-9			88.90	0.5601			171.95			3.500	3.198			6.770
SSE-055E-10			101.60	0.4725			200.04			4.000	2.698			7.876
SSE-055E-11			114.30	0.4024			229.87			4.500	2.298			9.050
SSE-055E-12			127.00	0.3622			255.43			5.000	2.068			10.056

[20] Shincoil. n.d. "Extension Spring." Accessed June 16, 2018. http://shincoil.com/Shincoil_extension.pdf.

14.2 Sizing of Motor

Once the springs have been decided on, the motor can be sized accordingly.

14.2.1 Nomenclature

Symbol	Description	Unit	Value (If any)
τ_{ops}	Operational torque	Nm	-
ω_{ops}	Operational speed	rpm	707
τ_{acc}	Torque required to accelerate the Orca Mini	Nm^{-1}	-
$\tau_{friction}$	Torque required to overcome the rolling friction of the system	Nm^{-1}	-
L_0	Free length of spring	m	0.117
L_1	Extended length or spring	m	0.16
r	Radius of wheel	m	0.0415
k	Spring constant of a single selected spring	Nm^{-1}	446.8
F_{magnet}	Force exerted by magnets	N	100.7
W_{body}	Weight of Orca Mini's main body	N	55
W_{lever}	Weight of cantilever	N	1.962
W_{sensor}	Weight of sensors on cantilever	N	1.962
μ_r	Coefficient of rolling friction of wheels on rails[21]	-	0.05
SF_{motor}	Safety Factor of Motor	-	-

[21]The Engineering ToolBox. n.d. Rolling Resistance. Accessed June 17, 2018. https://www.engineeringtoolbox.com/rolling-friction-resistance-d_1303.html.

14.2.2 Calculation of Operational Torque

Operational torque was calculated based on the following equation

$$\tau_{ops} = SF_{motor}(\tau_{acc} + \tau_{friction}) \tag{9}$$

τ_{acc} was set to be approximately $0.23Nm$ which would comfortably allow the Orca Mini to accelerate from $0\ km/h$ to $6\ km/h$ (above human walking pace) within 6 seconds. The operational speed ω_{ops} was set to be $384\ rpm$ which would allow the device to move at $6\ km/h$.

$\tau_{friction}$ was derived by summing up all rolling frictional forces that the motor must overcome for the Orca to start moving, as shown in the figure below.

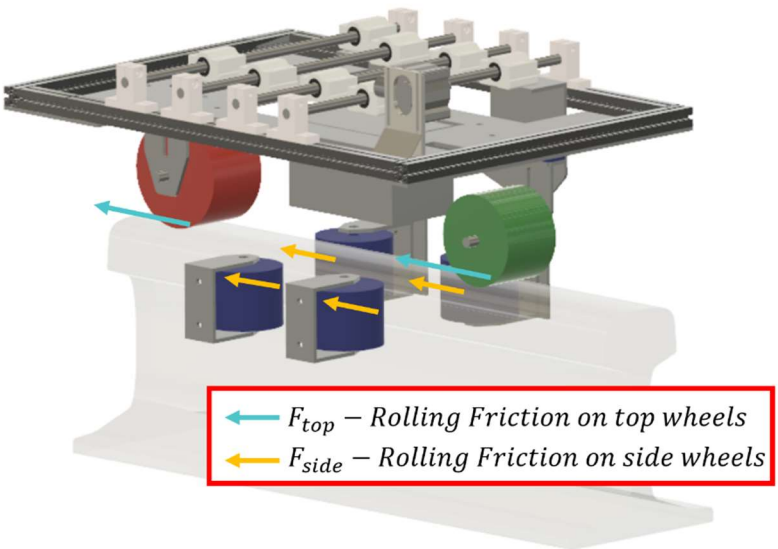

FIGURE 117. LABELLED DIAGRAM OF ALL FRICTIONAL FORCES ACTING ON THE ORCA MINI

$$F_{top,total} = \mu_r N_{top,total} = \mu_r(W_{lever} + W_{sensor} + W_{body} + F_{magnet}) = 7.98N \tag{9}$$

$$F_{side,total} = \mu_r N_{side,total} = 4\mu_r k(L_1 - L_0) = 3.15N \tag{10}$$

$$\tau_{friction} = r(F_{side,total} + F_{top,total}) = 0.463Nm \tag{11}$$

$$\tau_{total} = F_{side,total} + F_{top,total} = 0.693Nm$$

Using (9), with SF_{motor} set to 1.25, the τ_{ops} value obtained is $0.866Nm$. Without SF, it is 0.693Nm.

14.2.3 Plotting of Torque-Speed Graph

A wheel hub with an in-built brushless motor (**Figure 118**) was selected as a possible motor to be used for the Orca Mini. To ensure its suitability, a torque-speed graph was plotted for it.

Figure 118. Wheel hub with brushless motor

As the stall torque τ_{stall} was not provided by the manufacturer, a quick estimation of it was done using the calculations below

$$\tau_{stall} = \frac{Maximum\ Power\ Output}{Maximum\ Angular\ Velocity} = \frac{260W}{262\ rads^{-1}} = 0.992Nm \tag{12}$$

The torque-speed graph plotted is shown below.

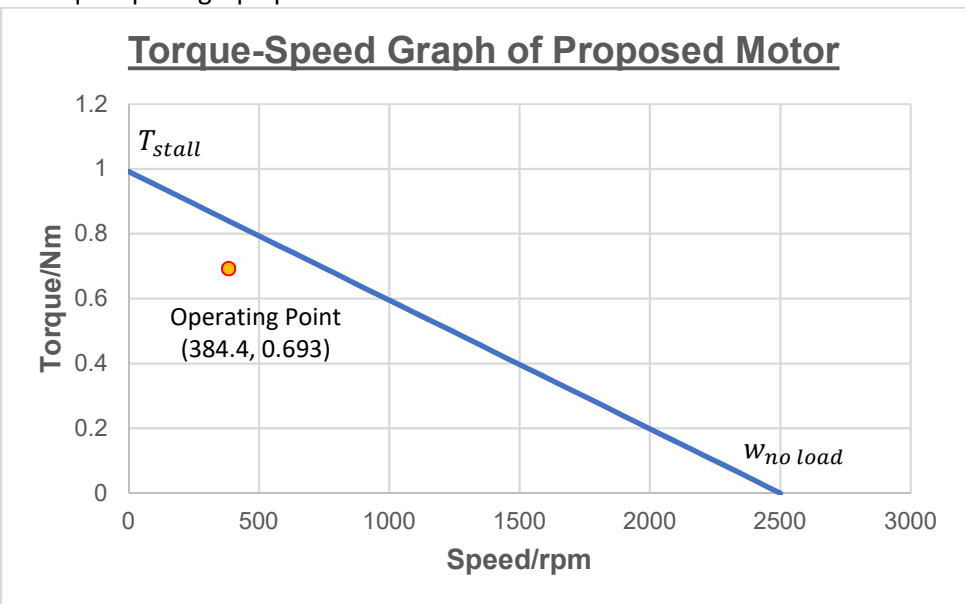

FIGURE 119. TORQUE SPEED GRAPH

14.3 Results Analysis

As shown in the above table, the operational specifications are well within the torque and speed limits of the motor and hence it would be able to comfortably serve its purpose. While Alvarado[22] recommends that the operational specifications should lie within 70%-90% of the no load speed, it was decided to proceed with this motor. The reason is that this motor integrates the drivetrain within

[22] Alvarado, Pablo Valdivia y. 2017. System Modelling. Singapore.

the wheel itself which reduces mechanical complexity of the Orca Mini, even though it might be slightly oversized. As these hub wheel motors are normally manufactured to electric skateboards, similar products have the same specifications[23] [24] and there is no hub wheel motor that better meets the Orca Mini's operational specifications.

[23] Annoy Wheel. n.d. 12v 24v 36v 2600rpm/min 3" 83mm Skateboard Motor Electric Motor Wheels 200w 250w 260w For Double Drive Skateboard Scooter DIY. Accessed June 17, 2018. https://www.aliexpress.com/item/12v-24v-36v-2600rpm-min-3-83mm-Skateboard-Motor-Electric-Motor-Wheels-200w-250w-260w-For/32830043664.html?spm=2114.search0104.3.2.66c34612LAfIQu&ws_ab_test=searchweb0_0,searchweb201602_3_10152_10151_10065_10344_10068_572281.

[24] Green E-Motion. n.d. Electric Skateboard HoverBoard Longboard DIY Single Drive Remote Skatebord Kit With Hub Motor Wheels PU Wheels And Trucks. Accessed June 16, 2018. https://www.aliexpress.com/item/Electric-Skateboard-HoverBoard-Longboard-DIY-Single-Drive-Remote-Skatebord-Kit-With-Hub-Motor-Wheels-PU-Wheels/32813541180.html?spm=2114.10010108.1000023.14.71761f98xxNnC2.

Annex 15 Usability Testing Design Changes

Iteration	Date	Design Changes
1	10 June – 20 Jun	**Problems:** 1. Difficult to handle ORCA because there is no good place to grab it 2. Side aluminium plates scratch the floor when they were dragged on the floor **Solutions:** 1. Add multiple handles for easy handling 2. Add rubber seals at the bottom of the side plates to prevent any scratching of the floor
2	25 Jun – 29 Jun	**Problems:** 1. Small plastic handle was difficult to be lifted by two hands using single man configuration 2. Ethernet cables and power jacks on the side arms have no way to exit the original side electronics box cover 3. Handles become uncomfortable during prolonged handling **Solutions:** 1. Large side handles installed to make single man carry more comfortable. These enlarged handles also serve a secondary function of enabling the crossbar to be inverted. A major advantage of this is that it allows the side arms to be easily compacted into the crossbar when converting the ORCA into its compressed form, saving a lot of time and effort during the assembly and disassembly of the trolley. 2. New side electronics box covers with holes for ethernet port and power jack were installed. Covers were labelled to inform the user of the function of the ports. 3. Installation of rubber grip tape on handles to make them more comfortable
3	2 Jul – 13 Jul	**Problems:** 1. Commercial aluminium extrusion end stops were very loose and easily dropped off during handling of ORCA 2. Mentor Ling Ken feedbacked that a sweeper should be installed to increase the accuracy of the 2D scans **Solutions:** 1. Replaced commercial aluminium extrusion end stops with 3D printed custom end stops that can be securely screwed on 2. Added rail sweeper attachment to clean rail head before 2D laser scanner is performed. 3D printed cap rounds sharp “L” corner

4	16 Jul – 27 Jul	**Problems:** 1. When testing at night, it was difficult to see what was in front as the user had to hold a torchlight on one hand and push the ORCA with another **Solutions:** 1. Install torchlights on the handle of the ORCA

Annex 16 Heat sink sizing

Sizing for the heat sinks was conducted for the component we identified was most likely to overheat – the Raspberry Pi. This microprocessor acts as a WiFi router, processor and database while powering the RFID reader.

CIRCUIT PROTECTION: SIZING OF HEAT SINK FOR POWER REGULATORS

Objective: Size heat sinks to prevent power regulators form overheating

Step 1: Look Up Key Regulator Specifications

Maximum Junction Temperature: 150°C

Regulator Efficiency: 77%

		MIN	MAX	UNIT
Maximum supply voltage	LM2576		45	V
	LM2576HV		63	V
ON /OFF pin input voltage		−0.3V ≤ V ≤ +V_{IN}		V
Output voltage to ground	(Steady-state)	−1		V
Power dissipation		Internally Limited		
Maximum junction temperature, T_J			150	°C
Storage temperature, T_{stg}		−65	150	°C
η Efficiency	V_{IN} = 12 V, I_{LOAD} = 3 A		77%	

LM2576 Regulator Datasheet

Data retrieved from SNVS107D – JUNE 1999–REVISED MAY 2016

Step 2: Calculate Maximum Theoretical Power Output

- Max current output of Raspberry Pi is 1.2A, and output voltage is 5V
- Efficiency of regulator is 77% at operating point (datasheet)
- Expected thermal power produced is: **(1-0.77)*5V*1.2A = 1.38W**

Step 3: Calculate Heat Dissipation of Selected Heat Sink

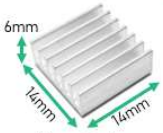

Heat Sinks Used

- Heat sink dimensions =14x14x6mm or 8.8x8.8x5mm (fabricated extrusion)
- Apply $\eta = \frac{Q}{\dot{m}c\Delta T_{sa}}$ and $P_{DMAX} = \frac{T_{JMAX} - T_A}{\theta_{JA}}$

Efficiency*Temperature Difference/Thermal Resistance = **0.15*(150–30)/10 = 1.8W**

Safety Factor = 1.8/1.5 = 1.2
Conclusion: Unlikely to overheat

Annex 17 Circuit Protection

The LM2596 voltage regulator (**Figure 120**) is a cheap and effective form of circuit protection. At $0.30 SGD per piece, its circuit design allows it to behave as a fuse, diode and power regulator at the same time (**Figure 121**) as the gain amplifier controls the power output, the current limiting MOSFET acts as a diode and the 3.0 Amp switch acts as a fuse which burns in the event the current exceeds 3A. Effectively, the regulator is able to control the direction and quantity of current flow, thus regulating the power input into the circuit.

Purchasing a board for mounting the fuse and diode costs approximately $0.30 and requires additional time for soldering the components. Hence the LM2596 was chosen as the safety device for our circuits.

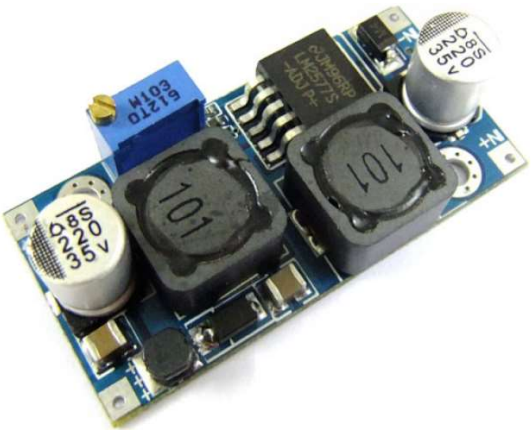

FIGURE 120. THE HUMBLE LM2596 VOLTAGE REGULATOR.

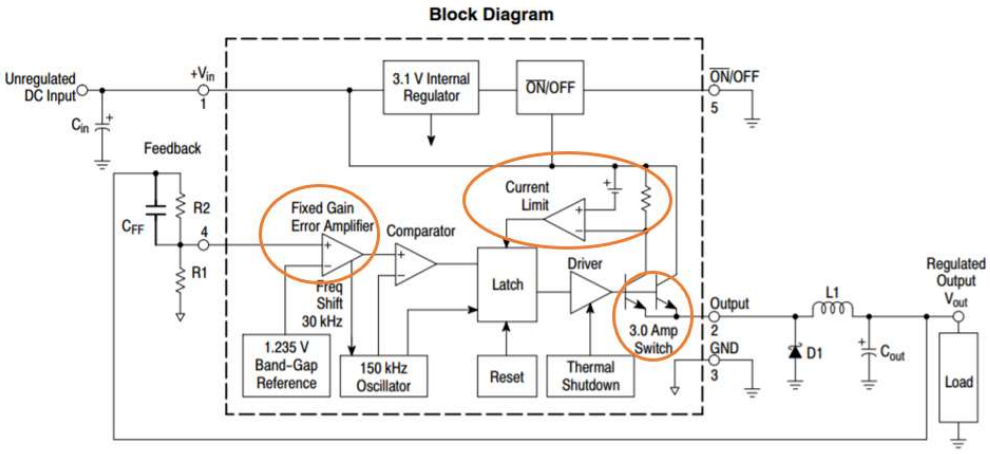

FIGURE 121. CIRCUIT DIAGRAM OF THE LM2596 VOLTAGE REGULATOR.

Furthermore, to prevent damage to the circuits and batteries, a voltage sensor (**Figure 122**) was installed in the key circuits. By comparing the voltage of the batteries to the standard voltage – discharge capacity characteristics of the Li-ion battery, we can estimate the amount of power left in the batteries based on the voltage. This prevents over-discharge of the batteries which shortens their

lifespans permanently, and under-voltage of electrical components, which cause them to reboot repeatedly at a high frequency contributing to shortened lifespans and data corruption.

FIGURE 122. A LOW COST VOLTAGE SENSOR ACTING AS A PROXY FOR BATTERY POWER LEVELS.

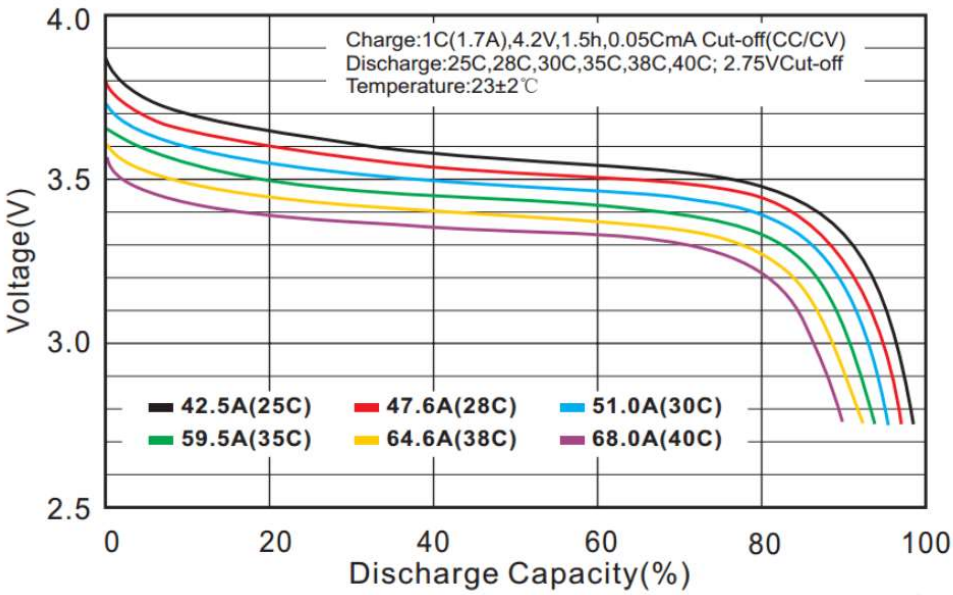

FIGURE 123. VOLTAGE-POWER DISCHARGE CHARACTERISTICS OF LI-ION CELLS.

Annex 18 Battery Sizing Test Results

Battery Sizing Test Results

TESTING THE BATTERY CAPACITY

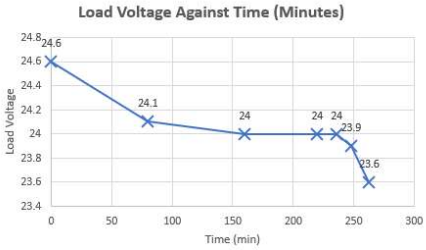

Charge V/cell	Capacity at cut-off voltage	Charge time	Capacity with full saturation
3.80	60%	120 min	65%
3.90	70%	135 min	76%
4.00	75%	150 min	82%
4.10	80%	165 min	87%
4.20	85%	180 min	100%

Test Battery Capacity with Single 2D Laser

Starting Voltage/Cell = 4.10V, End Voltage/Cell = 3.93V ; Power Approximately 76% of Original

Energy Consumed = 4W*4h= 16Wh, Current Capacity Used = 650mAh =16.25% ; Discharge Rate = 0.0406C

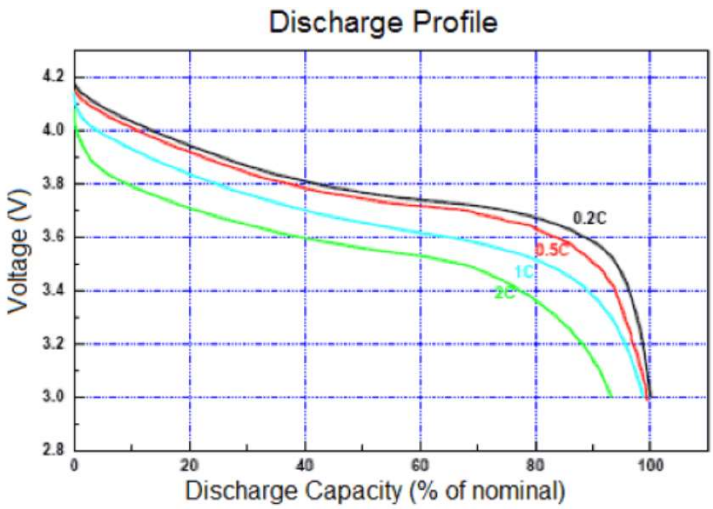

Discharge: 3.0V cutoff at room temperature.

Expected discharge profile of Li-ion batteries are similar to the characteristics of the Li-ion batteries used in the Orca.

BATTERY LIFE TEST

- **Objective: To physically test if batteries can survive operational duration (4 hours)**

ORCA ARM BATTERY TEST SETUP INFORMATION

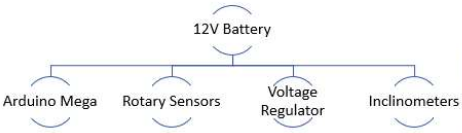

Predicted Energy Consumption during Operational Duration

No.	Name	Qty	Voltage (V)	Current (A)	Power Consumption (W)	Operation Time(h)	Energy (Wh)
1	Inclinometer	2	4.75-5.25V	0.0025-0.004A	0.021W	4	0.81
2	Arduino Mega	1	7-12V	9 x 20mA	Max = 2.4W	4	8.64
3	Rotary Sensor	3	5V	0.00005A	0.00075W	4	0.03
						Sub-Total:	9.5
No.	**Name**	**Qty**	**Efficiency (Operating Point Vin = 12V, Vout = 5V)**				**Energy Loss (Wh)**
1	Voltage Regulator	1	77%				2.84
Total Power Required							12.34

Test Set-up

Operating Voltage: 12V, Required Current Capacity: >1.028Ah

Test Battery Rating: 12V, 4000mAh

Theoretical Capacity: 15.6h (3.89 X Required Capacity)

Test Duration: 6h (Test Capacity = 1.5X Required Capacity)

Test Conclusion: ORCA's battery set-up allows for at least 6 hours of operation

Annex 19 Rotary Encoder Troubleshooting

PHASE 1: INITIAL TEST SET-UP

Purpose: GET SENSOR READINGS

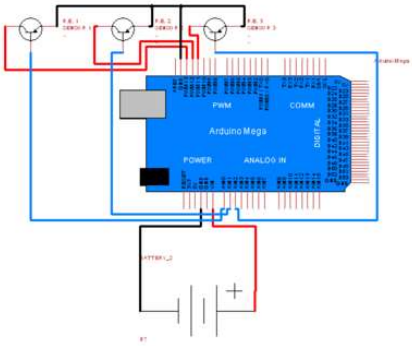

Initial Orca Arm Sensor Test Set-up

Basic Set-up for Sensors

1. **Power the Sensors**
   - Powered using Arduino's 5V Digital Pins (40mA max output)
2. **Read and Convert Analog Data**
   - Using Serial Monitor and functions
3. **Cross-Check Against Physical Set-up**
   - Move sensors and check if the readings match
   - Sensor values did not match, consistently off by 6° .

PHASE 2: TROUBLESHOOTING THE SENSOR

Purpose: Tune Sensor Readings

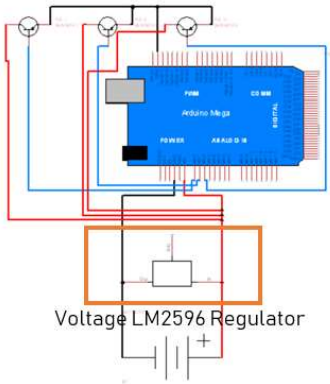

Final Orca Arm Sensor Set-up

Tuning Sensor Readings

1. **Checking Input/Output Voltages**
   - Digital output pins were found to output 4.7V
2. **Calibrate Analog Data Conversion Functions**
   - Based on varying sensor sensitivities
3. **Correct Input Voltage with Regulator**
   - Introduction of voltage regulator into circuit

PHASE 3: DOCUMENTING RESULTS

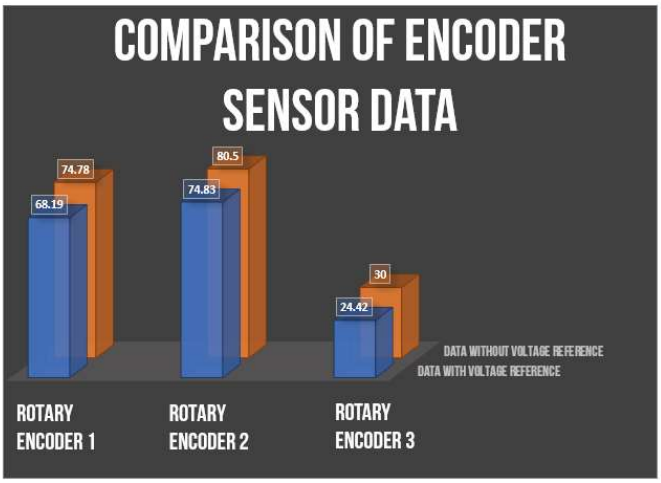

Orca Sensing Capabilities

Incorrectly Biased Sensor Values

- Aside from inclinometers, other sensor values to not fluctuate significantly
- This is partially due to the introduction of fixed reference voltages
- **Inclusion of reference voltage also removed voltage bias**

(Arduino regulator inaccurate, with a 7.4V battery, reference voltage becomes 5.3V, while a 5V USB input causes reference voltage to become 4.7)

DATA COLLECTION AND RESULTS

Orca Sensing Capabilities

Incorrectly Biased Sensor Values

- Aside from inclinometers, other sensor values to not fluctuate significantly
- This is due to the introduction of fixed reference voltages
- **Inclusion of reference voltage also removed voltage bias**

(Arduino regulator inaccurate, with a 7.4V battery, reference voltage becomes 5.3V, while a 5V USB input causes reference voltage to become 4.7)

Annex 20 Sensor Selection Considerations

SENSOR SPECIFICATIONS (RF625 100/250, 75/180)

RF625 2D SCANNER

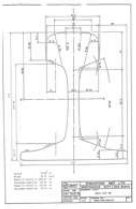

SMRT RAIL PROFILE

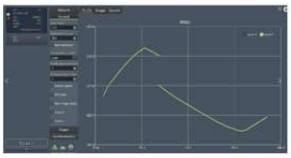

SCANNED PROFILE FROM TESTS

SELECTION CONSIDERATIONS:

1. HIGHLY COMPATIBLE SCAN RANGE
2. COMPETITIVE PRICING
3. DELIVERY LEAD TIME*
4. LARGE VOLTAGE INPUT RANGE
5. IP67 RATING (WATER SUBMERSIBLE)
6. WELL-DEVELOPED SOFTWARE DEVELOPMENT KIT AND DOCUMENTATION*
7. COMPACT AND LIGHTWEIGHT

*FALSE ASSUMPTIONS

SENSOR SPECIFICATIONS (RF603 145/750)

RF603 1D DISPLACEMENT SENSOR

FIELD TESTING THE RF603

SELECTION CONSIDERATIONS:

1. HIGHLY COMPATIBLE MEASUREMENT RANG
2. COMPETITIVE PRICING
3. DELIVERY LEAD TIME*
4. LARGE VOLTAGE INPUT RANGE
5. IP67 RATING (WITH CABLES PLUGGED IN)
6. WELL-DEVELOPED SOFTWARE DEVELOPMENT KIT AND DOCUMENTATION*
7. COMPACT AND LIGHTWEIGHT

*MEASURED DISTANCE OF SLEEPER HEIGHT

*FALSE ASSUMPTIONS

SENSOR SPECIFICATIONS (VOLTAGE SENSOR)

ARDUINO VOLTAGE SENSOR

SELECTION CONSIDERATIONS:

1. EASY INTEGRATION
2. EASY INTERFACING
3. EXTREMELY LOW COST
4. SUITABLE SENSING RANGE (0-25V)

SENSOR SPECIFICATIONS (ADIS16488BMLZ)

ADIS16488 INERTIAL MEASUREMENT UNIT

SCA61T INCLINOMETER

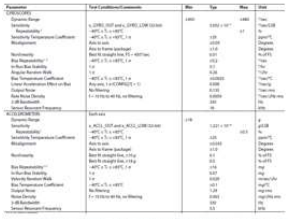

Parameter	Test Conditions/Comments	Min	Typ	Max	Unit
GYROSCOPES					
Dynamic Range		±450		±480	°/sec
Sensitivity	ω_x, GYRO_OUT and ω_y, GYRO_OUT 32-bit		3.052×10^{-9}		°/sec/LSB
Repeatability[1]	−40°C ≤ T$_A$ ≤ +85°C		±1		%
Sensitivity Temperature Coefficient	−40°C ≤ T$_A$ ≤ +85°C, f ≥		±25		ppm/°C
Misalignment	Axis to frame (package)		±0.05		Degrees
	Axis to axis		±0.05		Degrees
Nonlinearity	Best fit straight line, FS = 450°/sec		±0.1		% of FS
Bias Repeatability[1, 2]	−40°C ≤ T$_A$ ≤ +85°C, f ≥		±0.5		°/sec
In-Run Bias Stability	f ≥		6.1		°/sec
Angular Random Walk	f ≥		0.34		°/√hr
Bias Temperature Coefficient	−40°C ≤ T$_A$ ≤ +85°C, f ≥		±0.005		°/sec/°C
Linear Acceleration Effect on Bias	Any axis, f ≥ 0.1 (GRMS)[2] = 1		0.1		°/sec/g
Output Noise	No filtering		0.135		°/sec rms
Rate Noise Density	f = 10 Hz to 40 Hz, no filtering		0.0004		°/sec/Hz rms
3 dB Bandwidth			330		Hz
Sensor Resonant Frequency			14		kHz
ACCELEROMETERS					
Dynamic Range	Each axis	±18			g
Sensitivity	a_x, ACCL_OUT and a_y, ACCL_OUT 32-bit		1.221×10^{-9}		g/LSB
Repeatability[1]	−40°C ≤ T$_A$ ≤ +85°C			±0.5	%
Sensitivity Temperature Coefficient	−40°C ≤ T$_A$ ≤ +85°C, f ≥		±25		ppm/°C
Misalignment	Axis to axis		±0.05		Degrees
	Axis to frame (package)		±1.0		Degrees
Nonlinearity	Best fit straight line, ±18 g		0.1		% of FS
	Best fit straight line, ±10 g		0.5		% of FS
Bias Repeatability[1, 2]	−40°C ≤ T$_A$ ≤ +85°C, f ≥		0.04		g
In-Run Bias Stability	f ≥		0.01		g
Velocity Random Walk	f ≥		0.029		m/sec/√hr
Bias Temperature Coefficient	−40°C ≤ T$_A$ ≤ +85°C		±0.1		mg/°C
Output Noise	No filtering		1.24		mg rms
Noise Density	f = 10 Hz to 40 Hz, no filtering		0.063		mg/√Hz rms
3 dB Bandwidth			330		Hz
Sensor Resonant Frequency			5.5		kHz

BASIC COMPARISION (ADIS16488 against SCA61T)

NONLINEARITY: 0.045° vs 0.11°

DYNAMIC RANGE: ±450°/s vs ±90°

SENSITIVITY: 32-BIT vs 11-BIT

RATIOMETRIC ERROR: NON-EXISTENT VS **±1%**

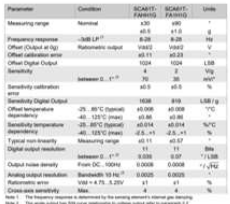

Parameter	Condition	SCA61T-FAH01G	SCA61T-FAH01D	Units
Measuring range	Nominal	±30	±90	°
		±0.5	±1.0	g
Frequency response	−3dB LP[1]	8-28	8-28	Hz
Offset (Output at 0g)	Ratiometric output	Vdd/2	Vdd/2	V
Offset calibration error		±0.11	±0.23	°
Offset Digital Output		1024	1024	LSB
Sensitivity	between 0…1[1, 2]	4	2	V/g
		70	35	mV/°
Sensitivity calibration error		±0.3	±0.5	%
Sensitivity Digital Output		1638	819	LSB / g
Offset temperature dependency	-25…80°C (typical)	±0.006	±0.008	°/°C
	-40…125°C (max)	±0.06	±0.08	°
Sensitivity temperature dependency	-25…80°C (typical)	±0.014	±0.014	%/°C
	-40…125°C (max)	-0.5…+1	-2.5…+1	%
Typical non-linearity	Measuring range	±0.11	±0.57	°
Digital output resolution		11	11	Bits
	between 0…1[1, 2]	0.035	0.07	°/LSB
Output noise density	From DC…100Hz	0.0008	0.0008	°/√Hz
Analog output resolution	Bandwidth 10 Hz[3]	0.0025	0.0025	°
Ratiometric error	Vdd = 4.75…5.25V	±1	±1	%
Cross-axis sensitivity	Max.	4	4	%

Note 1 The frequency response is determined by the sensing element's internal gas damping.
Note 2 The angle output has SIN curve relationship to voltage output refer to paragraph 2.2
Note 3 Resolution = Noise density * (Bandwidth).

SELECTION CONSIDERATIONS:

1. PRECISION
2. LOW NOISE
3. DEVELOPMENT POTENTIAL
4. DELIVERY LEAD TIME
5. IP67 RATING (WITH CABLES PLUGGED IN)
6. WELL-DEVELOPED SOFTWARE DEVELOPMENT KIT AND DOCUMENTATION*
7. COMPACT AND LIGHTWEIGHT
8. EASY INTEGRATION*
9. 3.3V INPUT VOLTAGE

*FALSE ASSUMPTIONS

SENSOR SPECIFICATIONS (IDENTIX RFID READER)

Identix miniPad USB RFID Reader

SELECTION CONSIDERATIONS:

1. EASY INTEGRATION (BUILT-IN ANTENNA)
2. EASY INTERFACING (SERIAL USB)
3. DETECTION RANGE
4. REASONABLE PRICE
5. 5V INPUT VOLTAGE
6. DELIVERY LEAD TIME
7. LIGHTWEIGHT AND COMPACT
8. CIRCULARLY POLARIZED ANTENNA

COMPONENT SPECIFICATIONS (ETHERNET SWITCH)

NETGEAR 200 Series Unmanaged Switches

SELECTION CONSIDERATIONS:

1. SUFFICIENT NUMBER OF PORTS
2. EASY INTEGRATION
3. 12V INPUT VOLTAGE
4. REASONABLE PRICE
5. LIGHTWEIGHT AND COMPACT
6. GIGABIT TRASFER RATE

Annex 21 RFID Interfacing and Experimentation

We conducted extensive initial testing of our purchased RFID equipment. Figure 124 shows the RFID equipment we have selected and purchased, while Figure 125 shows an example of our test setup.

- **Identix miniPad USB RFID reader**
  - Max range: 4.5m
  - Dimensions: 116 x 60 x 12 mm
  - In-built antenna
    - No need to consider antenna-reader compatibility
  - Circularly polarized antenna
    - Less sensitive orientation
  - IP54
- **Omni-ID Exo 800p Rigid RFID Tag**
  - Max range: 8m
  - Dimensions (mm): 105 × 36 × 3.5
  - Passive, plastic-mount tag
  - Ruggedized (IP68, MIL STD 810-G)
- **Omni-ID Exo 750 RFID Tag**
  - Max range: 11m
  - Dimensions (mm): 51 x 48 x 12.6
  - Passive, metal-mount tag
  - Ruggedized (IP68, MIL STD 810-G)

FIGURE 124. RFID EQUIPMENT

FIGURE 125. TABLE-TOP TEST SETUP

Our selected RFID reader uses serial communication. For our initial tests, we interfaced with the reader using a windows laptop.

21.1 Reading the Received Signal Strength

By experimenting with the reader's configurations and settings, we verified that the it can be tuned to reflect tags only within desired distance by adjusting its Received Signal Strength Indicator (RSSI) thresholds (Figure 126).

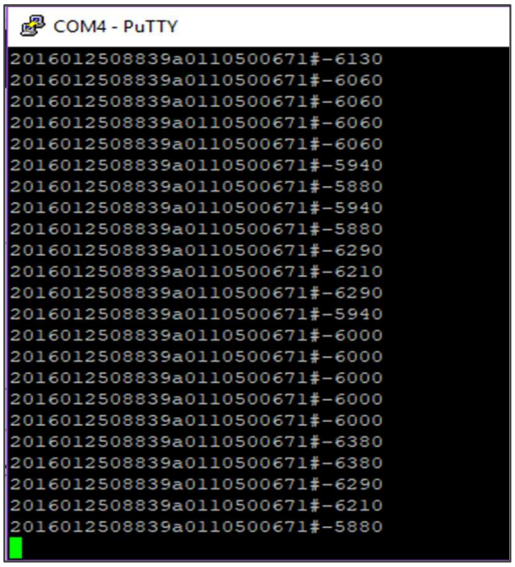

FIGURE 126. INVENTORY RESULTS SHOWING EPC TAG ID AND RECEIVED SIGNAL STRENGTH INDICATOR (RSSI)

21.2 RFID Reader Coverage

Further testing reveals that the RFID reader has wide coverage (Figure 127). In this case, the signal strength would be an extremely useful parameter to help us determine the exact instances whereby the reader is passing over a tag (since signal strength is strongest when reader is directly above tag). This would increase the accuracy of RFID distance synchronization for our mapping system.

FIGURE 127. TESTING THE COVERAGE OF THE RFID READER USING PLASTIC-MOUNT TAG

21.3 Effects of Environment Factors

Through tests, we have verified that the environment factors identified previously do have significant effects on the max. read range. Figure 128 lists the test results on the effects of environment factors.

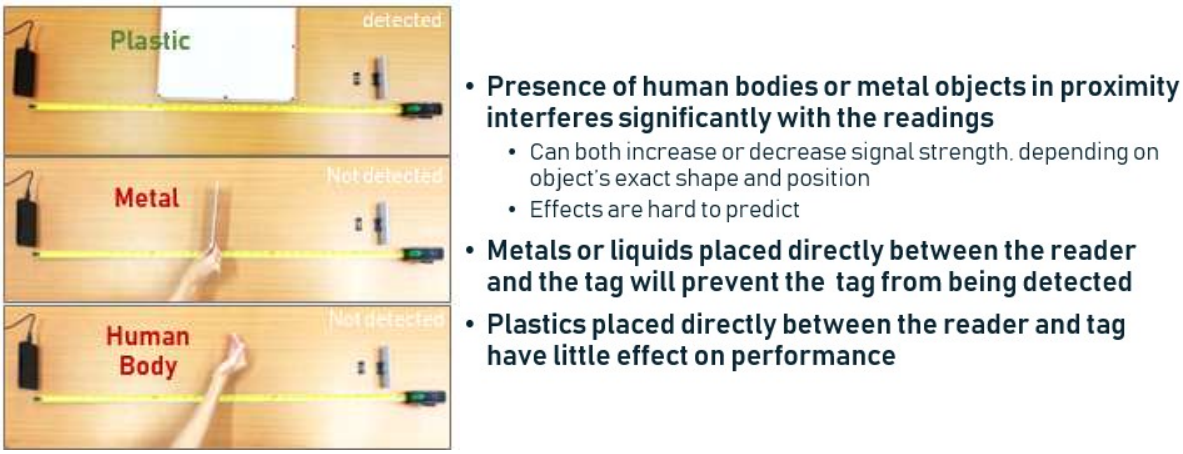

FIGURE 128. EFFECTS OF ENVIRONMENT INTERFERENCES ON RFID PERFORMANCE

21.4 Metal-mount vs. Plastic-mount tag

Since sleepers along the tracks are not often replaced compared to other track assets, we intend to mount our RFID Tags on the sleepers which are made of wood and concrete (non-metal surfaces).

	Plastic-mount Tag, Non-metal surface	Metal-mount Tag, Non-metal surface	Metal-mount Tag, 2.5cm from metal surface
Tag			
Max. Range	88cm	36cm	87.5cm

FIGURE 129. PERFORMANCE OF TAGS ON DIFFERENT SURFACES

We also noted that the sleepers are positioned with metal rails on both sides. Tagging in close proximity to metals may increase performance of a metal-mount tags and interfere with the propagation of waves to and from the reader and tag. To determine whether a plastic-mount tag or a metal-mount tag is more suitable for our application, the performance of the two tags on different surfaces was compared. The results are shown in **Figure 129**.

Overall, the use of plastic-mount tags is likely to result in better performance for our application. The performance of metal-mount tag is dependent on proximity to metals, and adding a metal backing to each tag is also not a good option as it will be more costly to implement, in terms of both materials and labour costs.

In addition, use of the plastic-tag has a range of 88cm which is much larger than the range required for our application, which is approximately 26 - 50cm. This provides a good margin to mitigate the possible decrease in performance when in actual rail environments.

21.5 Reader-Tag Orientation

We also determined that read range is relatively less sensitive to orientation as the system displays acceptable read ranges at various orientations (**Figure 130**). The best performing orientations were used in our implementation of the mapping system.

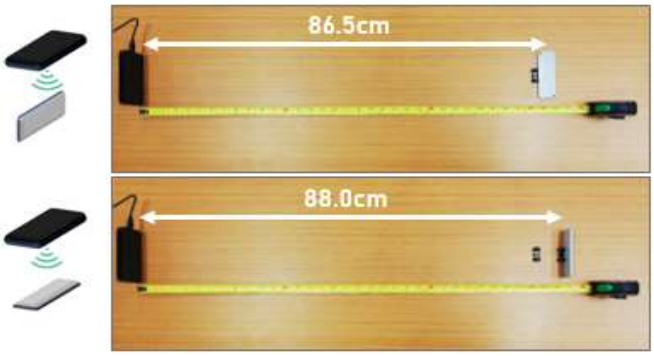

#	1	2	3	4
Orientation of Setup				
Max. Range	88cm	87cm	83cm	81cm

FIGURE 130. PERFORMANCE OF DIFFERENT READER-TAG ORIENTATIONS

Annex 22 Testing of the IMU Sensor

22.1 Testing distance tracking using a low-cost IMU

To test the feasibility of calculating distance travelled using an IMU, we purchased the low cost MPU9250 IMU sensor for experimenting. There are existing Arduino libraries for the MPU9250 sensor, which we used in our tests. Figure 131 shows the magnetometer calibration results (where the X, Y, and Z magnetometer readings are adjusted such that they have similar means and standard deviations) as well as the testing procedure for the low-cost IMU.

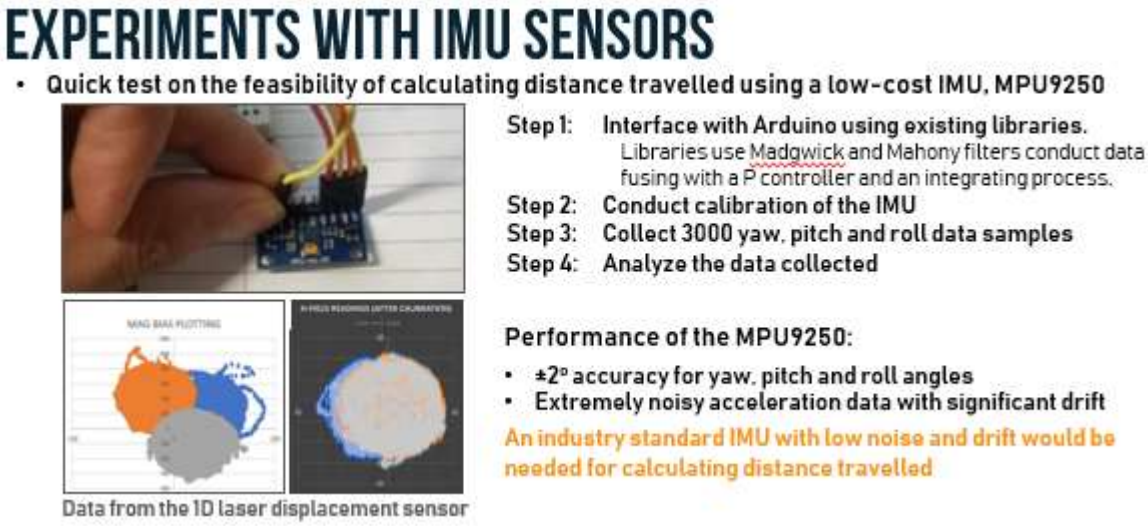

FIGURE 131. EXPERIMENTING WITH A LOW-COST IMU, MPU9250

The two libraries tested are the MPU9250 library by kriswiner and the RTIMULib library. Both libraries uses Madgwick and Mahony filters to achieve reduce noise and compute values of yaw, pitch and roll. We were able to obtain ±2° accuracy for yaw, pitch and roll angles, but acceleration data was extremely noisy and had significant drift over time. This makes it highly unsuitable as a sensor for calculating distance travelled. We concluded that further tests with an industry standard IMU with low noise and drift would be needed.

22.2 Testing distance tracking using an industrial grade IMU

Having tested a low-cost IMU (MPU9250), we determined that the low-cost IMU had too much drift and noise in its readings and is not suitable for distance tracking. We then proceeded to purchase a rugged, industry standard IMU (ADIS16488).

- Interfacing with industry-standard IMU, ADIS16488

1. Set up the SPI interface with the Raspberry Pi
2. Power supply specifications from datasheet:
   - Operating voltage range: 3.0 V to 3.6 V
   - Operating current: 254 mA

However, initial trials demonstrated that 3.6V was not sufficient for powering up the sensor
-> IMU does not respond to commands

Suspected cause: Insufficient power at startup

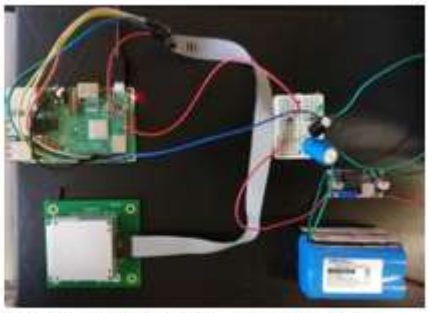

Overview of IMU setup, with capacitors

FIGURE 132. EXPERIMENTING WITH INDUSTRIAL GRADE ADIS16488 IMU

22.3 Problem faced: IMU not responding to requests

The newly purchased IMU communicates over SPI. We worked to set up the SPI interface on the Raspberry Pi to communicate with the sensor. However, all initial attempts to communicate with it using the Raspberry Pi failed.

Upon further research, we discovered that the sensor required surge in current up to a maximum of 600mA within the first 500ms of initialization (Figure 133). We suspected that the sensor was not drawing sufficient power during initialization as a voltage dip was plausible if the sensor requires a current surge during its initialization phase. This dip happens quickly at high frequencies and cannot be measured on conventional metering devices, which was why we did not observe the voltage dip when using a voltmeter.

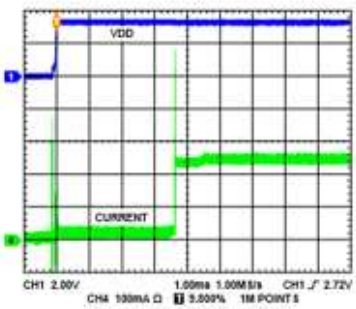

Transient startup current demand

Attempt 1: Add capacitors across the VDD and GND pins to oppose any voltage dips during initialization surge

Attempt 2: Increase input voltage above the specified maximum while limiting maximum power draw

- Success in powering up IMU in Attempt 2
- Able to communicate and measure angular velocities and accelerations

Future Development Required:
- Design startup circuit for the IMU

IMU drawing normal operating current after successful initialization

FIGURE 133. INTERFACING ATTEMPTS WITH THE INDUSTRIAL GRADE ADIS16488 IMU

To counter the problem, we added capacitors to oppose the voltage dip and increased the voltage supplied to values above the specified maximum for input voltage of 3.3V. At approximately 4.3V, the sensor began drawing the expected amount of current for normal operation, after which we quickly lowered the operating voltage to 3.3V. We

could then successfully communicate with the IMU and was able to obtain its angular velocity and acceleration values.

22.4 Potential Issues

We would need to design a circuit to deliver the required voltage profile for initialization. Although we have successfully interfaced with the IMU sensor and obtained good readings from it, there is still much work to be done to integrate it into our data measurement system. Due to time limitations, development of the IMU was halted.

Annex 23 Pugh Chart of 2D Rail Profile Alignment Methods

*** Criteria are factors that are directly in line with our stakeholder's needs and constraints. Each of them are assigned a specific weightage. For example, if stakeholder's Primary Needs requires the solution to be cost effective and last 4 hours,*
*** Additional considerations attempt to balance the feasibility of the project given the resource constraints, with the Capstone requirements which favor the development of prototypes instead of industrial standard solutions.*
*** In summary, the weightages are adjusted accordingly to how far the criteria deviates from both SMRT's and the Capstone's needs and constraints, in addition to what the team has identified as sufficiently challenging, yet achievable withi*
*** Note that in some cases, the best ranking concepts are combinations of features with similar functions from the morphological chart. This occurs because the addition of features does not incur much cost and can balance our other feature*
*** Note that a concept will receive a lower score in the event the difficulty in meeting the criteria is relatively harder than in other concepts, causing the confidence in meeting the criteria to fall.*
*** Project constraints were factored in the scoring of criteria as well. For example, there are ways to potentially achieve high accuracy track geometry data using a UAV, however, given the limited Engineering Hours, it is not feasible to emplo*

		Concept No.	1	2	3	4	5	6	
	2D Laser Sensor Rail Profile Alignment Method	Concept	Use OpenCV C++ Curve Matching Library	Hardcode Fixed Transformation	Fixed Transformation + Linear Search (translation, rotation, zoom) + Maximize Overlap	Detect Corner as Reference + Linear Search (rotation, zoom) + Maximize Overlap	Detect Corner as Reference + Detect Edge of Base as Reference + Transform	Detect Corner as Reference + Circular Intersections + Identify Additional Keypoints + Transformation	Criteria Definition for Scoring
	Criteria	Stake	Scoring (1-10)	Scoring (1-10)	Scoring (1-10)	Scoring (1-10)	Scoring (1-10)	Scoring (1-10)	
Primary Need 3. The solution provides precise and relevant measurements	Expected Accuracy	152	10	3	9	7	8	8	Estimated level of accuracy of using this method.
	Robustness to Sensor errors	152	10	1	8	6	2	8	Ability of the method to maintain accuracy even with noise and missing data from sensor
	Speed of Execution	152	7	10	1	3	10	7	How fast the method can align images
	Risk	106	2	10	8	7	5	4	Likelihood that the method can be successfully implemented, the lower the risk, the better.
	Development Time	61	5	10	9	7	6	4	Amount of time it would take to implement this method, the less time to develop, the better.
	Accuracy Potential	45	2	8	4	5	8	6	Potential to include add ons to further improve accuracy.
Primary Need 7. The solution is easy to set up and use	Ease of Debugging	167	1	8	5	6	7	4	How easy it would be to debug the code. Determined by expected complexity.
	Integration with other Software Components	167	2	8	8	8	8	8	Ease at which this method can interface with other software such as UI.
		Concept Score:	5212	6830	6484	6164	6801	6438	
		Concept Ranking	6	1	4	5	2	3	

Solutions 2,3,4 have the lowest scores. They have too many tradeoffs in the critical components of accuracy, robustness and speed of execution
Solutions 1,5,6 are the more advanced solutions that are expected to provide both accuracy and speed.
Solution 2 exhibits a large jump in position partly due to the fact that the need to complete this segment of the project is critical based on the stakeholder needs, this is not fully captured by the criteria that assess the quality of the algorithm, but is captured by criteria such as 'Risk' and 'Development Time' both of which

FIGURE 134. PUGH CHART FOR THE 2D PROFILE ALIGNMENT

Annex 24 Circular Intersection Algorithm

The OpenCV C++ library is to be developed first as it is expected to be the best performing algorithm with the shortest development time, but its ranking is pulled down by the risks involved. We adopt the "fail fast" methodology and attempt high-risk high-reward solutions first.

"Detect Corner + Circular Intersections" builds on top of "Detect Corner + Detect Edge of Base" and is naturally developed later. Circular intersections are a highly simplified version of scale invariant feature detection (Li & Niebles, 2016) which uses corner points to generate more key-points. In **Figure** 135, an example of a corner point (red) generating 2 new key-points (blue) is shown.

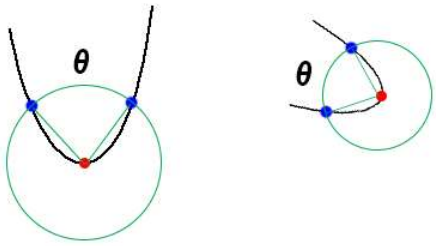

FIGURE 135. CIRCLE INTERSECTION FEATURES, THE ANGLE θ IS THE SAME IN BOTH CURVES.

Annex 25 Reference profile alignment results

This shows the results of the alignment algorithm on 3 different reference rail samples. 43 readings were taken, distributed over the length of each sample. Sample 2 has 21 readings as it was longer than sample 1 and 4. Sample 3 is not used as its shininess resulted in extremely noisy results.

The values in the square brackets are [vertical wear, 45 degree wear, horizontal wear]. Expected wear should be 0, thus there is approximately 0.2mm of error in the results.

```
(capstone) >python profile_alignment.py
Please enter folder name: reference_job/1left
Right? (1 for True, 0 for False): 0
Output:
Verbose (1 for True, 0 for False): 1
key_regex (default .*_(.*).prof use (.*).prof for full filename): (.*).prof
11896.prof : [-0.17729624147502662, -0.0752077450532056, -0.2527292456555017]
fishing n: 230  base n: 115
11919.prof : [-0.23671853784629865, -0.1869143787084404, -0.3603626381903098]
fishing n: 225  base n: 115
11947.prof : [-0.1707828022274768, -0.08286368812661848, -0.207788151385067]
fishing n: 228  base n: 130
11973.prof : [-0.207168292832006, -0.13806001574374704, -0.27985616217741693]
fishing n: 229  base n: 130
11993.prof : [-0.23392649507843835, -0.16897447359227158, -0.3167332287935878]
fishing n: 233  base n: 127
12021.prof : [-0.20925163654011994, -0.12905286136175675, -0.2737398052167421]
fishing n: 229  base n: 129
12047.prof : [-0.2356878031999952, -0.17053638297254636, -0.3324688103394777]
fishing n: 232  base n: 115
12071.prof : [-0.21520894739571275, -0.14853276138847704, -0.3369893390499925]
fishing n: 209  base n: 113
12098.prof : [-0.20683214510249634, -0.16598224232797776, -0.3048996744828685]
fishing n: 232  base n: 113
12117.prof : [-0.22329937227337404, -0.16270225662095683, -0.3603462724868649]
fishing n: 226  base n: 128
3258.prof : [-0.09008760078038414, 0.019451264754330566, -0.1386360701478182]
fishing n: 219  base n: 122


Time taken: 2.6715621948242188s (11 profiles, avg 0.24286929043856534s/profile)

(capstone) >python profile_alignment.py
Please enter folder name: reference_job/2left
Right? (1 for True, 0 for False): 0
Output:
Verbose (1 for True, 0 for False): 1
key_regex (default .*_(.*).prof use (.*).prof for full filename): (.*).prof
10303.prof : [0.14023382737831436, 0.05962010753536262, 0.13576406594042112]
fishing n: 241  base n: 100
10333.prof : [0.11595760005788094, 0.00954881055623602, 0.12057204008192457]
fishing n: 234  base n: 109
10357.prof : [0.14630643916607747, 0.027614580010769885, 0.1515803643952438]
fishing n: 227  base n: 110
10384.prof : [0.1570227626627779, 0.048817750439244634, 0.11135430708272764]
fishing n: 250  base n: 105
10403.prof : [0.12217222998551788, -0.01985894745553196, 0.05550745243200339]
fishing n: 252  base n: 105
```

```
10431.prof : [0.1386646730211557, 0.010504656751553654, 0.20218235441766552]
fishing n: 255  base n: 90
10454.prof : [0.07644693752824851, -0.10379476648460795, 0.1488130853845675]
fishing n: 247  base n: 90
10477.prof : [0.102345387538463, 0.024723664581966176, 0.22202653239094872]
fishing n: 233  base n: 110
10504.prof : [0.0906916087880104, 0.04030161882734973, 0.07754911808147824]
fishing n: 240  base n: 119
10532.prof : [0.048614304001220764, -0.04803601993701889, 0.0549648371585576]
fishing n: 255  base n: 81
10559.prof : [0.16679428656502227, 0.05733833143430189, 0.2107089552293928]
fishing n: 250  base n: 100
10578.prof : [0.12096107809895564, -0.011537534544363126, 0.19688016725519475]
fishing n: 256  base n: 69
10606.prof : [0.09832289783086531, 0.027897558742079553, 0.21059464134225436]
fishing n: 254  base n: 97
10629.prof : [0.13370026812578067, 0.003918893458241257, 0.26295514430686495]
fishing n: 233  base n: 81
10652.prof : [0.18116188585780973, 0.13676276462306092, 0.1871668128272077]
fishing n: 248  base n: 106
10680.prof : [0.1869391177056755, 0.08165784369606754, 0.22921054987742195]
fishing n: 250  base n: 124
10703.prof : [0.17874319435762528, 0.004145414662005464, 0.1947196394409474]
fishing n: 240  base n: 115
10730.prof : [0.14423102716481442, 0.07443072818870888, 0.2019889222787583]
fishing n: 236  base n: 105
10758.prof : [0.09821065850628004, -0.02052694374602737, 0.1317692342914185]
fishing n: 243  base n: 106
10781.prof : [0.14187557944553042, -0.06094713193232337, 0.19962778135764836]
fishing n: 252  base n: 99
6887.prof : [0.16577281308007713, 0.06760155747015162, 0.32043741977182094]
fishing n: 250  base n: 115


Time taken: 4.890162229537964s (21 profiles, avg 0.23286486807323636s/profile)

(capstone) >python profile_alignment.py
Please enter folder name: reference_job/4left
Right? (1 for True, 0 for False): 0
Output:
Verbose (1 for True, 0 for False): 1
key_regex (default .*_(.*).prof use (.*).prof for full filename): (.*).prof
28305.prof : [-0.13286490994546993, -0.03924347457881794, -0.18348197675607736]
fishing n: 245  base n: 142
30556.prof : [-0.09688423338145663, 0.010128773480332143, -0.09898613194867067]
fishing n: 226  base n: 159
30586.prof : [-0.05395747096423847, 0.06419894722450437, -0.05939303816192876]
fishing n: 227  base n: 139
30606.prof : [-0.05403026196099964, 0.019851655488690056, -0.12159433052318036]
fishing n: 217  base n: 136
30633.prof : [-0.03215501087137999, 0.047085901060874846, 0.09756787800723288]
fishing n: 234  base n: 159
30657.prof : [-0.07233369164753671, 0.032369730704218114, -0.12101804244125702]
fishing n: 195  base n: 146
30683.prof : [-0.035140104412685585, 0.07840571186522993, -0.01832432581111476]
fishing n: 238  base n: 144
30706.prof : [-0.0032512341271668595, 0.031724391720771905, 0.036456955177847306]
fishing n: 211  base n: 170
```

```
30730.prof : [-0.005628539243537099, 0.07065928625441131, 0.051948565298197025]
fishing n: 239  base n: 174
30762.prof : [-0.03895298001753836, 0.009240538865270764, -0.06190318645700188]
fishing n: 229  base n: 152
30781.prof : [-0.0825338547477072, -0.018023677107713354, -0.12360664812104005]
fishing n: 237  base n: 150


Time taken: 2.6716902256011963s (11 profiles, avg 0.24288092960010876s/profile)
```

Annex 26 A/B Testing Analysis Example

This is an example of how A/B Testing results will be analyzed, along with an example decision made. This example is used as a framework to help guide our actual test.

Criteria for A/B Testing:

1. User Satisfaction
2. Average time taken to perform desired action

26.1 Example results:

	Control (GRAW)	**A**	**B**
User Satisfaction (1-5)	3	2	5
Average Time Taken to Perform Desired Action	10.1s	9.2s	15.9s
Average Time Score	3	4	1
Comments	-	Looks uglier than GRAW	Nice interface!
Decision	-	Use B styling but A logic flow	

We focus our interface on 2 main criteria stated above. In the case where user satisfaction is better, but the average time score is worse, comments will used to determine the next course of action. For example, if an interface is very good at performing its function but not aesthetically appealing or has buttons that do not provide enough feedback, its logic can be incorporated into the other interface's design.

To make sure that the interface compares favorably against its predecessor, we use the GRAW's interface as the control group for the scoring system. This ensures that the scoring is very objective and the scores for the criteria are reflective of an improvement over the previous interface.

Annex 27 UI A/B Testing

Tasks

1) User to start an operation and label a point

2) User to navigate to the sensor status page

3) User to locate the data page

This A/B test was done on 24th May 2018.

This A/B testing is done to validate the styles that the team has chosen to proceed with. If the crew members preferred the GRAW style of user interface, we would defer to that style instead. It is important to account for user feedback as this would see a visible improvement in the user happiness and functionality of the final product.

Green rows indicate the interface that they used first. Both crew members performed better on the second interface as they understood the symbols and icons used for the buttons and were quicker at navigating.

Name	Interface A/B	User Satisfaction	Time taken for task 1	Time taken for task 2	Time taken for task 3
Hashnel	A	2	30s	2s	11s
Hashnel	B	1	2s	7s	4s
Sudiani	A	1	3s	Instant	2s
Sudiani	B	2	39s	20s	10s

Other findings:

User manual required. The trolley crew requested for a user manual for them to learn the functions of the new interface.

Data recording should be done while the trolley is measuring the track. This will prevent loss of data if the session crashes and loses the in-between track data.

Annex 28 Re-iterations and Improvements

Iteration 1 (General layout and template):

These templates (Figure 136) were made using Adobe XD. They were used for the first A/B test. The focus was to test for the style preferred by the trolley crew and find out the missing elements required by the users.

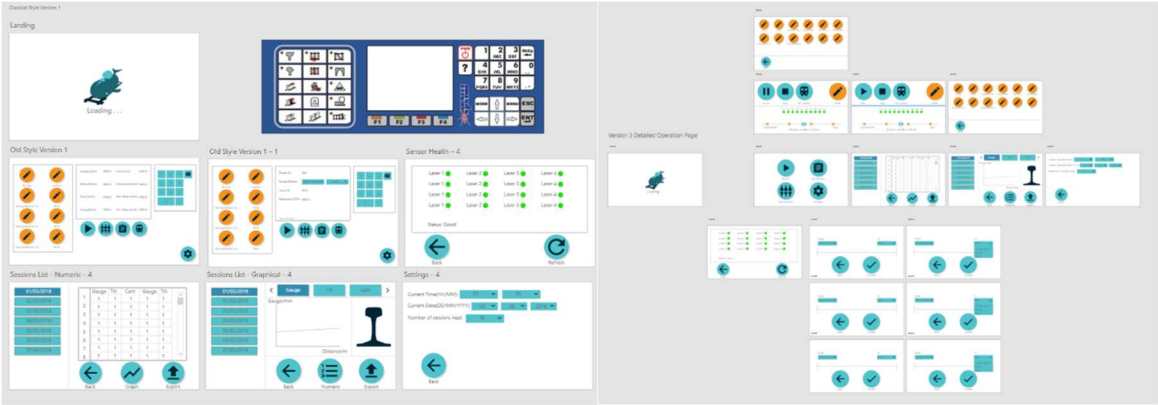

FIGURE 136. GRAW STYLE INTERFACE AND A MINIMALISTIC INTERFACE

Iteration 2 (Finalized Layout):

Based on the user feedback from the A/B test, we refocused the user interface elements and managed to arrive at the new iteration that reduced the complexity of the operation page (Figure 137) while maintaining the amount of data shown on the data page (Figure 138).

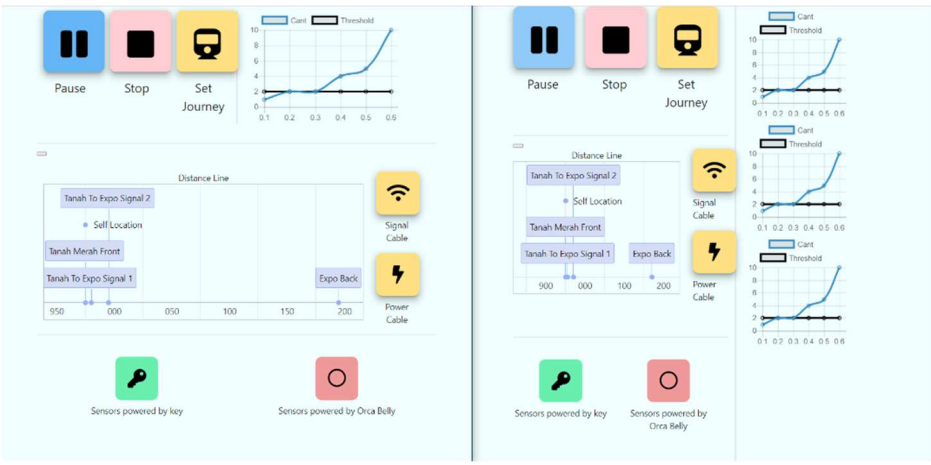

FIGURE 137. A/B TEST FOR OPERATIONS PAGE

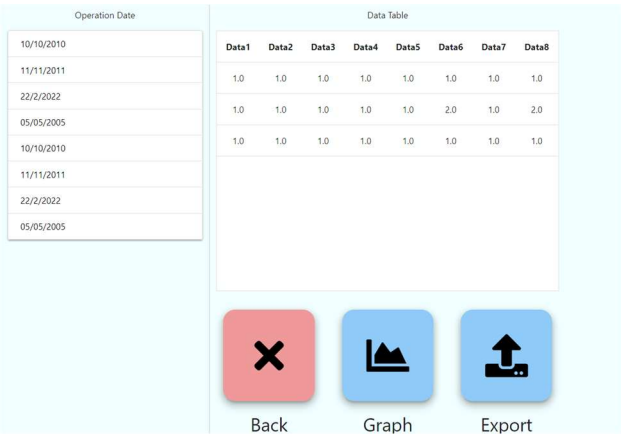

FIGURE 138. IMPROVED DATA PAGE

Iteration 3 (Fine-tuning and Enhanced Usability):

Final polishing of the user interface includes the removal of the graph portion from the operation page for further simplification, this reduces the load on the interface and further emphasizes the trolley crew's main needs which are, tracking of distance travelled and ensuring that sensors are operational.

Furthermore, the data page has been augmented with red highlighting of threshold-exceeding values (Figure 139). For example, when gradient exceeds 1.6, the application automatically flags the erroneous points for human inspection. The job information and dates have been updated to better reflect the accuracy of the timestamps used during the operation. The data page is also fitted an immediate graph plotting function which enables users to view general trends over the rail (Figure 140).

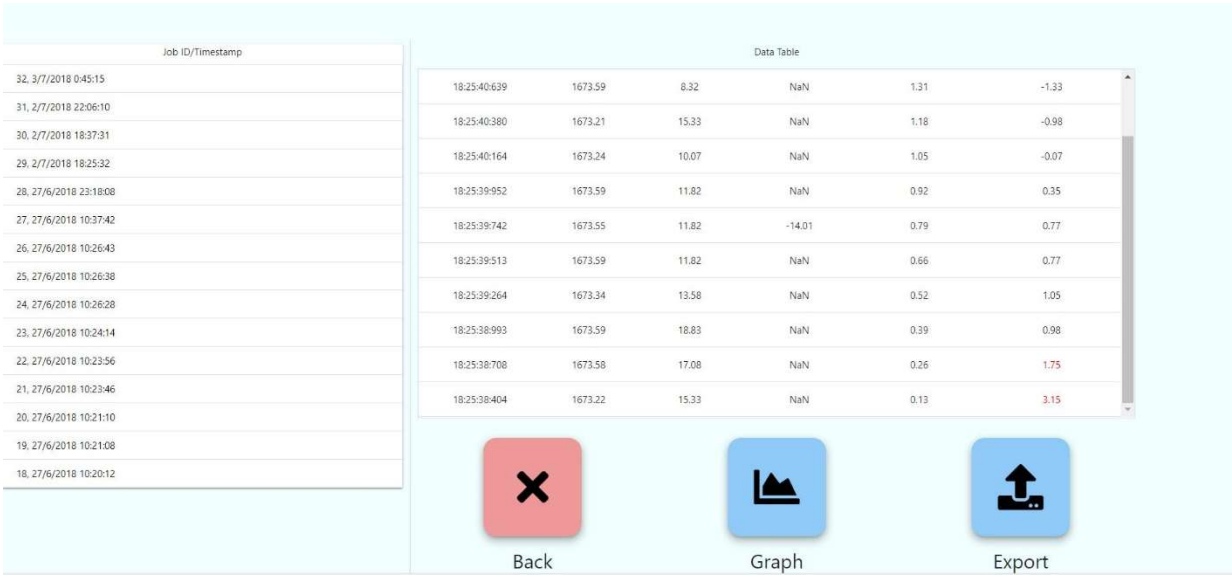

FIGURE 139. DATA PAGE WITH THRESHOLDS

FIGURE 140. GRAPHICAL PLOT OF DATA

Annex 29 Technical Requirements

Technical Requirements List and Results									
Sub-Component(s)	Number	Requirement	Sign	Target	Units	Predicted Results	Test Average Results (3-6x)	Associated Stakeholder Need	Need Priority No.
Orca, Orca-Mini	1	The shall shall be manually assembled from Original Equipment Manufacturer's pre-fabricated parts and pre-soldered circuitry in less than 1 minute	<	2.0	minute	1		The solution is easy to set up and use	7
Orca, Orca-Mini	2	the unit shall require no special tools to assemble.	=	0	special tools	N/A		The solution is easy to set up and use	7
Orca, Orca-Mini	3	The unit shall be entirely assemblable with top-down insertions only.	=	0	non-top-down-insertions	0		The solution is easy to set up and use	7
Orca, Orca-Mini	4	The unit shall be assemblable with no measurements or adjustments.	=	0	adjustments	Adjustments not required		The solution is easy to set up and use	7
Orca	5	The unit shall be able to execute its 2D rail alignment with at least a 80% success rate	>	80	%	95%		The solution provide precise and relevant measurements	3
Orca, Orca-Mini	6	The unit shall remain fully operational with minor appearance damage after dropping once from at least 0.5m.	>	0.5	m	Cracks from >0.3 drops		The solution is sustainable	5
Orca, Orca-Mini	7	The unit shall operate continously at full capacity for over 5hours.	>	5	hours	4 hours		The solution is sustainable	5
Orca	8	The unit shall be reasonably stable while travelling on rails	<	0.1G	m/s	<0.1 G		The solution provides precise and relevant measurements	3
Orca, Orca-Mini	9	The time to turn calibrate the system shall be less than 1 minute.	<	1.0	min	2 minutes		The solution is easy to set up and use	7
Orca	10	The time to extract the data and shutdown the system shall be less than 1 minute.	<	1.0	min	2		The solution is easy to set up and use	7
Orca-Mini	11	The unit shall communicate at up to 10m distance (Orca-Mini)	>	10.0	m	>10m		The solution is easy to set up and use	7
Orca-Mini	12	The delay in control actuation shall be under 0.1 seconds.	<	0.1	sec	<0.1		The solution is easy to set up and use	7
Orca-Mini	13	The unit shall have a maximum speed of 5km/h	<	5.0	km/h	<5km/h		The solution is easy to set up and use	7
Orca, Orca-Mini	14	The unit shall have at least 8 slots for mounting additional sensors	>	8	slots	>8		The solution detects more track features	6
Orca, Orca-Mini	15	The sensors shall be completely disassemblable from the frames	=	0	fixed sensors	=0		The solution detects more track features	6
Orca, Orca-Mini	16	The unit shall be built to mount least 8 seperable and different functioning modules.	>	8	modules	>8		The solution detects more track features	6
Orca, Orca-Mini	17	The unit shall be able to be fully charged within 4hours	<	4.0	hours	<6		The solution is easy to set up and use	7
Orca, Orca-Mini	18	The unit shall require no tools (unscrewing, etc.) to recharge.	=	0	tools	=0		The solution is easy to set up and use	7
Orca, Orca-Mini	19	The unit shall require no disconnecting boards or cables to recharge.	=	0	disconnections	=0		The solution is easy to set up and use	7
Orca, Orca-Mini	22	The units shall have a material cost of less than $3000 in ordering quantities of 1.	<	$300	S$	<$300		The solution is cost effective	2

FIGURE 141. TECHNICAL REQUIREMENTS LIST FOR ORCA AND ORCA-MINI

Annex 30 Test Plans

Project Orca Test Plans				
Test No.	Test Name	Test Equipment	Step No.	Test Process Concept
1	Assembly and Operations	Stopwatch Accelerometer Phone with Orca-Mini App Installed	1	Assemble and record required time.
			2	Deploy and ensure proper operation as per "Deployment Test"
			3	Record any adjustments needed.
			4	Test vibration of assembly, record values.
			5	Dissassemble and repeat 6 times. Average the results.

2	Trolley Transportation Tests	2 Humans	1	Inspect unit for any loose components, tighten
			2	Carry unit up and down 3 flights of stairs
			3	Inspect unit for any loosened parts
			4	Record loose attachment points
			6	Repeat 6 times or until unit fails. Record number of trials.
3	Recharge Test + Endurance Test	Stopwatch, Charger	1	Discharge battery by running prototype at full capacity
			2	Record the run time of the system before battery discharges completely
			3	Start recharging batteries, record time taken to charge batteries to full

4	Stability Test	Vibration Test Bed	1	Place vibration sensor on drone.
			2	Turn on motors. Record vibration readings and tighten/adjust components
			3	Repeat test if necessary until vibration readings are under 0.1G
5	Deployment Test	Test Track	1	Place the Orca on the test track
			2	Calibrate the Orca
			3	Run the Orca over the test track
			4	Record data collected from the drive
			5	Repeat test 3 times
			6	Collate results and identify data's standard deviance

FIGURE 142. ORCA TEST PLANS

Annex 31 FMEA

Detection	
Rating	Meaning
1	Certain
2	Almost certain
3	High
4	Moderate
5	Low
6	Fault is undetected by Operators or Maintainers

Occurrence	
Rating	Meaning
1	Extremely Unlikely (Virtually impossible or No known occurrences on similar products or processes, with many running hours)
2	Remote (relatively few failures)
3	Occasional (occasional failures)
4	Reasonably Possible (repeated failures)
5	Frequent (failure is almost inevitable)

Severity	
1	No relevant effect on reliability or safety
2	Very minor, no damage, no injuries, only results in a maintenance action (only noticed by discriminating customers)
3	Minor, low damage, light injuries (affects very little of the system, noticed by average customer)
4	Critical (causes a loss of primary function; Loss of all safety Margins, 1 failure away from a catastrophe, severe damage, severe injuries, max 1 possible death)
5	Catastrophic (product becomes inoperative; the failure may result in complete unsafe operation and possible multiple deaths)

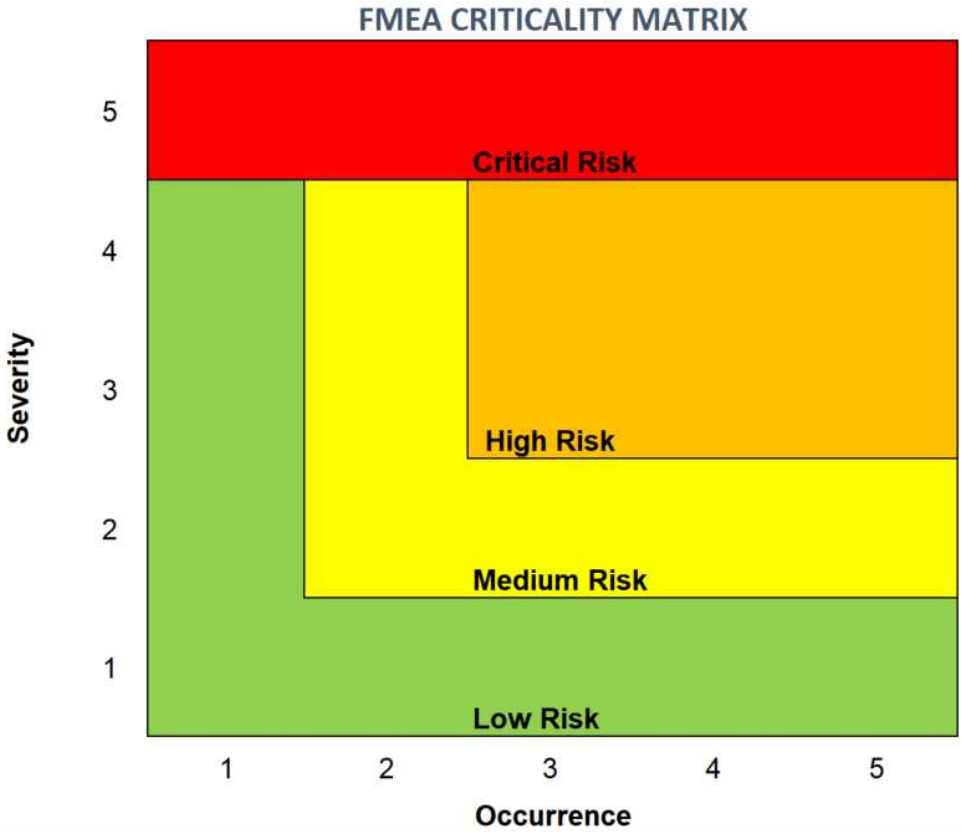

Failure Modes and Effect Analysis Template

An assessment of the critical failure modes of the different systems in the project

##Only RPNs that are classified as High Risk or Critical Risk are highlighted

Severity Occurrence Detectability Risk Priortity Number

	#	Function	Failure Mode	Effects	Causes		S	O	D	RPN	Mitigative Action	S	O	D	Mitigated RPN
ORCA - FMEA -ORCA - FMEA -ORCA - FMEA -ORCA - FMEA -ORCA - FMEA -ORCA - FMEA -ORCA - FMEA -ORCA - FMEA -ORCA - FMEA -ORCA - FMEA -ORCA	1	Sensors collect relevant data for analysis	Sensor data cable disconnects from processor	Data is no longer processed nor stored on the tablet	Loose wire connections		4	3	2	12	Ensure all wire connections are soldered and protected by an outer casing	4	1	2	4
	2	Sensors collect relevant data for analysis	Sensor power cable disconnects from processor and is no longer powered	Data is no longer being captured by the sensor	a) Loose wire connections b) Battery out of power c) Burnt wire connections		4	3	2	12	Ensure all wire connections are soldered and protected by an outer casing	4	1	2	4
	3	Sensors collect relevant data for analysis	Sensor component damaged due to electrical surge	Data will no longer be able to be captured by the sensor, or data may be captured incorrectly	a) Improper circuit connections b) Battery malfunction c) Component malfunction		4	2	2	8	Ensure fuses are integrated into the circuit to prevent component damage in event of surge, troubleshoot circuit after fuse is tripped	3	1	2	3
	4	Processor wirelessly transmits data to tablet via WiFi	Wireless connection is broken	Data is no longer transferred and stored in the tablet	a) Faulty WiFi dongle b) Physical break in connection between WiFi dongle and processor at USB port		4	1	3	4	Additional WiFi dongles purchased in case of defective components Ensure dongle and USB ports are securely attached and stored within a housing	2	1	3	2
	5	Prototyping frame securely bolted onto ABTUS	Prototyping frame connections with ABTUS loose	Sensor array will not be reliable Readings will be unstable Reference points no longer reliable	Attachment points sized incorrectly (too loose)		4	2	1	8	Size the attachment points carefully during construction and purchasing of components using CAD software	4	1	1	4
	6	Prototyping frame unbolted ABTUS	Prototyping frame connections with ABTUS cannot be removed	Trolley cannot be disassembled	Attachment points sized incorrectly (too tight)		3	2	1	6	Size the attachment points carefully during construction and purchasing of components using CAD software, widen attachment point if possible	3	1	1	3
	7	Prototyping frame is stable and rigid	the prototyping frame fall off in operation	longer Sensors possibly damaged	Attachment points sized incorrectly (too loose)		5	2	1	10	in event sensors fall off, damage minimized + size the attachment	3	1	1	3

MEA - ORCA - FM	12	ABTUS sensors serves as base for Orca development	ABTUS sensors damaged - no longer give readings	Core sensors for track geometry are lost, no more track geometry data	Trolley has not been maintained in a long time (component lifespan reached)		5	2	1	10	Purchase additional replacement sensors for the ABTUS beforehand and replace as required	3	2	1	6
ORCA-MINI - FMEA -ORCA-MINI - FMEA -ORCA-MINI - FMEA -ORCACA-MINI - FMEA -ORCA-MINI - FMEA -ORCA-MINI - FMEA -C	1	Motorized drivers propel Orca-Mini along the tracks	Wheels are not driven by motor	Loss of control	Undersized shaft		3	2	1	6	Ensure shaft size correct using CAD software to check beforehand	3	1	1	3
	2	Orca-Mini frame holds all components in planned position	Components installed in frame are mispositioned	Wheel turns unsteadily under load	Inaccuracies in frame construction		3	1	1	3	Take extra precaution when precise construction is required	3	1	1	3
	3	Provide power to Orca-Mini	Power provided with wrong polarity	Circuit board burned	Battery plugged in backwards		5	1	1	5	Polarity of all power input points clearly labelled Insertion of diodes at input points to prevent wrong current flow	1	1	1	1
	4	Receive commands from phone	Commands not received	Robot non-responsive	Error in copying MAC address		3	1	1	3	Pay extra attention to copying and pasting of addresses	1	1	1	1
	5	UI controls the Orca-Mini	UI fails to control the Orca-Mini	No feedback from phone UI	Loose wire connections		3	1	2	3	Check that all connections are in place before testing UI	1	1	1	1
	6	Sensors collect relevant data for positioning	Sensor data cable disconnects from processor	Data is no longer processed nor stored on the tablet	Loose wire connections		4	3	2	12	Ensure all wire connections are soldered and protected by an outer casing	4	1	2	4
	7	Sensors collect relevant data for positioning	Sensor power cable disconnects from processor and is no longer powered	Data is no longer being captured by the sensor	a) Loose wire connections b) Battery out of power c) Burnt wire connections		4	3	2	12	Ensure all wire connections are soldered and protected by an outer casing	4	1	2	4
	8	relevant data for positioning	damaged due to electrical surge	be able to be captured by the	connections b) Battery		4	2	2	8	integrated into the circuit to prevent	3	1	2	3
Mapping System - FMEA -Mapping System - FMEA -Mapping System - FMEA -Mapping System - FMEA -Mapping System - FMEA -Mapping Syste	1	RFID tags confirm location	RFID tags undetected	Position cannot be confirmed using RFID tags	Interference from other wireless signals or thick metallic objects		5	3	1	15	Position RFID tags and RFID using CAD software to determine if the range of the reader is sufficient Field studies of possible obstructions that exist on the tracks Use a mapping system that relies on at least 2 other sensors that are capable of identifying position along the rail in the event the RFID reader fails to function	3	1	1	3
	2	RFID tags mark specific locations	RFID tags mark the wrong position	Position cannot be confirmed using RFID tags	Accidental movement of the RFID tags		5	3	1	15	Position RFID tags in an area where movement of elements along the track do not affect them se a mapping system that relies on at least 2 other sensors that are capable of identifying position along the rail in the event the RFID reader fails to function	3	1	1	3
	3	Sleeper counting identifies position based on number of sleepers	Sleeper counting loses count of sleepers	Position cannot be confirmed using sleeper counting	Obstruction by physical object on the track		4	3	2	12	Position laser sensor using CAD software to determine if the range of the laser sensor is sufficient Field studies of possible obstructions that exist on the tracks	4	1	2	4
	4	Encoder determines exact distance travelled from a reference point	Encoder does not give exact distance travelled from a refrerence point	Position cannot be confirmed using encoder	Encoder slippage		4	3	3	12	Use magnets in wheels to reduce slippage of encoders	4	1	2	4
	5	IMU determines acceleration of the device	Acceleration detected incorrect	Error from determining position using acceleration will be poor	Vibrations from trolley		4	3	3	12	Use Kalman filter to weigh IMU readings against other sensors to determine position	4	1	1	4
Rail Profile Alignment Algorithm - FMEA	1	Measure horizonal, 45 deg and vertical rail wear	Alignment is inaccurate	Wear measurements are inaccurate	Poor algorithm		4	3	3	12	Program the algorithm such that it is convenient to debug + Prepare backup algorithms to attempt an alignment + Design the 2D laser sensor mount so that position is adjustable	3	2	3	6
	2	Obtain data from 2D sensor	Parts of data is cut off	Missing data to compute alignment with	a) Bugs in sensor b) Jerks or vibration causing movement of sensor		4	3	2	12	Design the 2D laser sensor mount so that position is adjustable + Use hardcoding and assume initial postion for referening	3	2	2	6

FIGURE 143. FMEA SAFETY ANALYSIS

Annex 32 Gantt Chart

PROBLEM FRAMING - SOLUTION SHAPING	MEMBERS ON TASK	REQ HOURS	COLOR CODE
Research on existing solutions(products/systems/software/strategies)	*Nicholas Ng Chun Keong, Lam Teng Foong*	**31**	
Generate List of Customer Needs and Constraints	*Eric Teo Zhi Han, Kevin Tan Kang Rui, Toh Wei Qi*	**31**	
Generate preliminary solution designs(products/systems/software/strategies)	*All*	**108**	
Rapid Prototyping of preliminary solutions	*All*	**82**	
Detail steps required to implement designs	*Toh Wei Qi, Eric Teo Zhi Han*	**36**	
Develop Competencies and Connect with Resources	*Kevin Tan Kang Rui, Eric Teo Zhi Han*	**36**	
Risk Assessments of Activities and Plans	*Chin Joo Ern*	**14**	
Budget Allocation Plan	*Chin Joo Ern*	**11.8**	
ELECTRONICS SYSTEM DESIGN (Leads: Nicholas Ng Chun Keong, Support: Chin Joo Ern)			
Overall Circuits Design	*Nicholas Ng Chun Keong*	**46**	
Power Distribution PCB Design	*Nicholas Ng Chun Keong*	**46**	
Recharging Systems Design and Construction	*Nicholas Ng Chun Keong*	**46**	
Purchase of Electronic Components	*Chin Joo Ern*	**4.6**	
Sub-component Testing	*Nicholas Ng Chun Keong*	**46**	
Sensor Data Consolidation and Reading	*Nicholas Ng Chun Keong*	**46**	
Electronics Housing Designs	*Nicholas Ng Chun Keong*	**46**	
Wiring Layout Optimization	*Chin Joo Ern*	**46**	
Integrated Circuit Testing	*Chin Joo Ern*	**22**	
Troubleshooting and Generation of Troubleshooting Instructions	*Chin Joo Ern*	**22**	
Robustness and Durability Checks	*Nicholas Ng Chun Keong*	**22**	

MECHANICAL SYSTEM DESIGN (Leads: Lam Teng Foong, Support: Nicholas Ng Chun Keong)			
Frame Design and Optimization	*Lam Teng Foong*	**46**	
Purchase of Mechanical Components	*Lam Teng Foong*	**4.6**	
Braking Mechanism Design	*Lam Teng Foong*	**46**	
Droid Adaptable Mounting System	*Nicholas Ng Chun Keong*	**46**	
Droid Drive Train	*Nicholas Ng Chun Keong*	**46**	
Integrated Mechanisms Testing	*Lam Teng Foong, Nicholas Ng Chun Keong*	**22**	
MAPPING SYSTEM DESIGN (Lead: Toh Wei Qi, Support: Chin Joo Ern)			
RFID Distance Marker System Design	*Toh Wei Qi*	**50**	
Purchase of RFID System Components	*Chin Joo Ern*	**5**	
RFID Sensor/Tag Testing	*Toh Wei Qi, Chin Joo Ern*	**50**	
LASER SENSOR DESIGN (Lead: Chin Joo Ern, Support: Eric Teo Zhi Han)			
Laser Sensor Consultations with Industry Specialists	*Chin Joo Ern*	**8**	
Laser Sensor Set-up Design	*Chin Joo Ern*	**35**	
Laser Sensor Data Processing Programming	*Eric Teo Zhi Han*	**35**	
Purchase of Laser Sensors (2D Scanner and Displacement Sensor)	*Chin Joo Ern*	**3.5**	
Testing/Calibration of Laser Sensors	*Eric Teo Zhi Han*	**68**	
SOFTWARE INTERFACE DESIGN (Lead: Kevin Tan Kang Rui, Support: Eric Teo Zhi Han)			
Software Framework Design	*Kevin Tan Kang Rui*	**24**	
Data Pipelining and Storage	*Eric Teo Zhi Han*	**41.5**	

Data Visualization	*Kevin Tan Kang Rui*	**33.5**	
UI/UX Research	*Kevin Tan Kang Rui*	**24**	
UI/UX Design and Development	*Kevin Tan Kang Rui*	**48**	
UI/UX A/B Testing	*Kevin Tan Kang Rui*	**92**	
COMPUTER VISION ANALYTICS (Leads: Eric Teo Zhi Han, Kevin Tan Kang Rui, Support: Toh Wei Qi)			
Database Construction	*Eric Teo Zhi Han, Kevin Tan Kang Rui, Toh Wei Qi*	**84**	
Image Processing Algorithms	*Eric Teo Zhi Han*	**32**	
Machine Learning Algorithms	*Eric Teo Zhi Han*	**32**	
Machine Learning Accuracy Testing	*Eric Teo Zhi Han*	**43**	
Field Testing and Conclusion Report	*Kevin Tan Kang Rui, Toh Wei Qi*	**33**	
ADMINISTRATIVE WORK/SUBMISSIONS/PRESENTATIONS			
Review 1 Presentation	*All*	**48**	
Review 2 Presentation	*All*	**60**	
Review 3 Presentation	*All*	**44**	
Review 4 Presentation	*All*	**36**	
Final Exhibition	*All*	**12**	
TESTING AND TROUBLESHOOTING			
Full Test Run in Working Environment	*All*	**72**	
SYSTEM INTEGRATION/ASSEMBLY			
Integrated System Testing	*All*	**72**	
FINAL ADJUSTMENTS			
Final Touch Up	*All*	**72**	

***Schedule has been omitted due to the limitation of the paper size. The general workflow may be studied in the overview of the Gantt Chart located in the next 3 pages.

COUNTDOWN FROM 53 [7/22/18-3/8/18]	Members: Ervin Tan Zhi Hao, Teh Wei Qi, Low Teng Fanny, Nicholas Ng Chee Keong	DEGIN	Day 1	Day 2	Day 3	Day 4	Day 5	Day 6	Day 7	Day 8	Day 9	Day 10	Day 11	Day 12	Day 13	Day 14	Day 15	Day 16	Day 17	Day 18	Day 19	Day 20	Day 21	Day 22	Day 23	Day 24	Day 25	Day 26	Day 27	Day 28	Day 29	Day 30	Day 31	Day 32	Day 33	Day 34	Day 35	Day 36	Day 37	Day 38	Day 39	Day 40	Day 41	Day 42	Day 43	Day 44
		Reg. Dr	7-Feb	8-Feb	9-Feb	10-Feb	11-Feb	12-Feb	13-Feb	14-Feb	15-Feb	16-Feb	17-Feb	18-Feb	19-Feb	20-Feb	21-Feb	22-Feb	23-Feb	24-Feb	25-Feb	26-Feb	27-Feb	28-Feb	1-Mar	2-Mar	3-Mar	4-Mar	5-Mar	6-Mar	7-Mar	8-Mar	9-Mar	10-Mar	11-Mar	12-Mar	13-Mar	14-Mar	15-Mar	16-Mar	17-Mar	18-Mar	19-Mar	20-Mar	21-Mar	22-Mar
PROBLEM FRAMING - SOLUTION SHAPING										GROUP MEETING							GROUP MEETING							GROUP MEETING							GROUP MEETING									GROUP MEETING						
Research on existing solutions (product/application/patents/academic/etc.)	Nicholas Ng Chee Keong, Low Teng Fanny	52	5	5	5	5	5	5	5	5	5	5	5	5	5	5	5	5																												
Generate Initial Concepts: Rough and Constructive	Ervin Tan Zhi Hao, Kevin Tan Kang Rui, Teh Wei Qi	52	5	5	5	5	5	5	5	5	5	5	5	5	5	5	5	5																												
Generate continuous solution designs (product/application/patents/academic/etc.)	All	108																									5	5	5	5	5	5	5	5	5	5	5	5	5	5	5	5	5	5	5	5
Rapid Prototyping of continuous solutions	All	82																																5	5	5	5	5	5	5	5	5	5	5	5	5
Detail design required to implement designs	All	36																																7	7	7	7	7	7	7	7	7	7	7	7	7
Develop Comprehensive and Connected with Resources	Kevin Tan Kang Rui, Ervin Tan Zhi Hao	36																																7	7	7	7	7	7	7	7	7	7	7	7	7
Risk Management at Motivation and Plans	Chin Jun Ern	96.2	8.2	8.2	8.2	8.2	8.2	8.2	8.2	8.2	8.2	8.2	8.2	8.2	8.2	8.2	8.2	8.2	8.2	8.2	8.2	8.2	8.2	8.2	8.2	8.2	8.2	8.2	8.2	8.2	8.2	8.2	8.2	8.2	8.2	8.2	8.2	8.2	8.2	8.2	8.2	8.2	8.2	8.2	8.2
Budget Milestone Plan	Chin Jun Ern	96.2																									8.2	8.2	8.2	8.2	8.2	8.2	8.2	8.2	8.2	8.2	8.2	8.2	8.2	8.2	8.2	8.2	8.2	8.2	8.2	8.2	8.2
ELECTRONICS SYSTEM DESIGN [Leader: Nicholas Ng Chee Keong, Support: Chin Jun Ern]																																														
Overall Circuit Design	Nicholas Ng Chee Keong	48																																												
Power Distribution PCB Design	Nicholas Ng Chee Keong	48																										1	1	1	1	1	1	1	1	1	1	1	1	1	1	1	1	1	1	1
Prototyping Systems Design and Construction	Nicholas Ng Chee Keong	48																										1	1	1	1	1	1													
Purchase of Electronic Components	Chin Jun Ern	8.1																										8.1	8.1	8.1	8.1	8.1	8.1	8.1	8.1	8.1	8.1	8.1	8.1	8.1	8.1	8.1	8.1	8.1	8.1	8.1
Sub-component Testing	Nicholas Ng Chee Keong	48																																												
Sensor Data Consolidation and Reading	Nicholas Ng Chee Keong	48																																												
Electronics Housing Design	Nicholas Ng Chee Keong	48																																												
Wiring Layout Optimisation	Chin Jun Ern	48																																												
Integrated Overall Testing	Chin Jun Ern	22																																												
Troubleshooting and Corrections at Troubleshooting Instances	Chin Jun Ern	22																																												
Robustness and Durability Checks	Nicholas Ng Chee Keong	22																																												
MECHANICAL SYSTEM DESIGN [Leader: Low Teng Fanny, Support: Nicholas Ng Chee Keong]																																														
Frame Design and Optimisation	Low Teng Fanny	48																																												
Purchase of Mechanical Components	Low Teng Fanny	8.1																										8.1	8.1	8.1	8.1	8.1	8.1	8.1	8.1	8.1	8.1	8.1	8.1	8.1	8.1	8.1	8.1	8.1	8.1	8.1
Braking Mechanism Design	Low Teng Fanny	48																										1	1	1	1	1	1	1	1	1	1	1	1	1	1	1	1	1	1	1
Proof Magnetic Mounting System	Nicholas Ng Chee Keong	48																																												
Proof Drive Train	Nicholas Ng Chee Keong	48																																												
Integrated Mechanisms Testing	Low Teng Fanny, Nicholas Ng Chee Keong	22																																												
MAPPING SYSTEM DESIGN [Lead: Teh Wei Qi, Support: Chin Jun Ern]																																														
RFID Balance Mapping System Design	Teh Wei Qi	58																										1	1	1	1	1	1	1	1	1	1	1	1	1	1	1	1	1	1	1
Purchase of RFID System Components	Chin Jun Ern	8																										8.1	8.1	8.1	8.1	8.1	8.1	8.1	8.1	8.1	8.1	8.1	8.1	8.1	8.1	8.1	8.1	8.1	8.1	8.1
RFID Sensor Fine Tuning	Teh Wei Qi, Chin Jun Ern	58																																												
LASER SENSOR DESIGN [Lead: Chin Jun Ern, Support: Ervin Tan Zhi Hao]																																														
Laser Sensor Specifications with Industry Specialists	Chin Jun Ern	8																									7	7	7	7	7	7	7	7												
Laser Sensor Setup Design	Chin Jun Ern	55																																1	1	1	1	1	1	1	1	1	1	1	1	1
Laser Sensor Data Processing Programming	Ervin Tan Zhi Hao	55																																1	1	1	1	1	1	1	1	1	1	1	1	1
Purchase of Laser Sensors (1D Sensors and Displacement Sensors)	Chin Jun Ern	8.1																																8.1	8.1	8.1	8.1	8.1	8.1	8.1	8.1	8.1	8.1	8.1	8.1	8.1
Testing/Calibration of Laser Sensors	Ervin Tan Zhi Hao	58																																												
SOFTWARE INTERFACE DESIGN [Lead: Kevin Tan Kang Rui, Support: Ervin Tan Zhi Hao]																																														
Software Framework Design	Kevin Tan Kang Rui	21	1	1	1	1	1	1	1	1	1	1	1	1	1	1	1	1	1	1	1	1	1	1	1	1	1																			
Data Processing and Storage	Ervin Tan Zhi Hao	85.5																										8.5	8.5	8.5	8.5	8.5	8.5	8.5	8.5	8.5	8.5	8.5	8.5	8.5	8.5	8.5	8.5	8.5	8.5	8.5
Data Visualisation	Kevin Tan Kang Rui	55.1																																												
GUI/UX Framework	Kevin Tan Kang Rui	21	1	1	1	1	1	1	1	1	1	1	1	1	1	1	1	1	1	1	1	1	1	1	1	1	1																			
GUI/UX Design and Development	Kevin Tan Kang Rui	48																										1	1	1	1	1	1	1	1	1	1	1	1	1	1	1	1	1	1	1
GUI/UX A/B Testing	Kevin Tan Kang Rui	55																																												
COMPUTER VISION ANALYTICS [Leader: Ervin Tan Zhi Hao, Kevin Tan Kang Rui, Support: Teh Wei Qi]																																														
Database Consolidation	Ervin Tan Zhi Hao, Kevin Tan Kang Rui, Teh Wei Qi	85	1	1	1	1	1	1	1	1	1	1	1	1	1	1	1	1	1	1	1	1	1	1	1	1	1	1	1	1	1	1	1	1	1	1	1	1	1	1	1	1	1	1	1	1
Image Processing Algorithm	Ervin Tan Zhi Hao	32																																												
Machine Learning Algorithm	Ervin Tan Zhi Hao	32																																												
Machine Learning Processing Training	Ervin Tan Zhi Hao	42																																												
Field Testing and Conclusion Report	Kevin Tan Kang Rui, Teh Wei Qi	55																																												
ADMINISTRATIVE WORK/SUBMISSIONS/PRESENTATIONS																																														
Review 1 Presentation	All	18	2	2	2	2	2	2	2	2	2	2	2	2	2	2	2	2	2	2	2	2	2	2	2	2	2																			
Review 2 Presentation	All	58																																												
Review 3 Presentation	All	40																																												
Review 4 Presentation	All	35																																												
Final Exhibition	All	72																																												
TESTING AND TROUBLESHOOTING																																														
Full Test Run in Working Environment	All	72																																												
SYSTEM INTEGRATION/ASSEMBLY																																														
Integrated System Testing	All	72																																												
FINAL ARRANGEMENTS																																														
Final Touch Up	All	72																																												

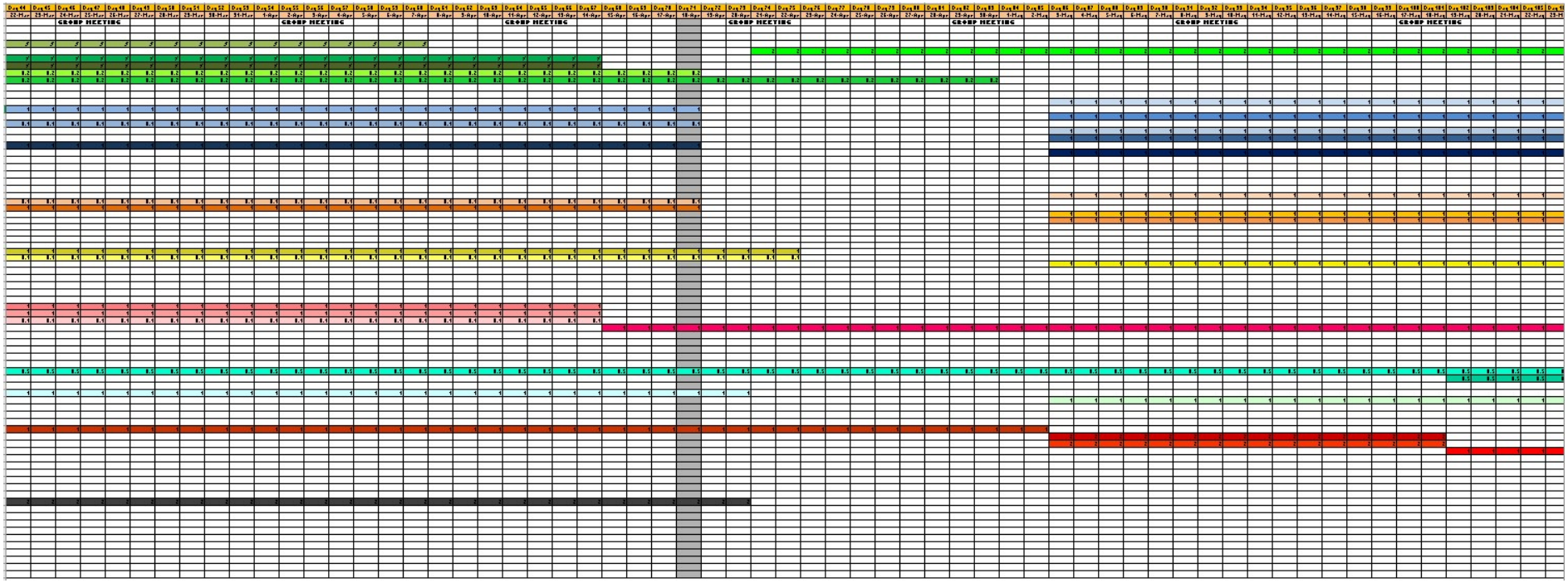
GROUP MEETING
GROUP MEETING
GROUP MEETING
GROUP MEETING
GROUP MEETING
GROUP MEETING

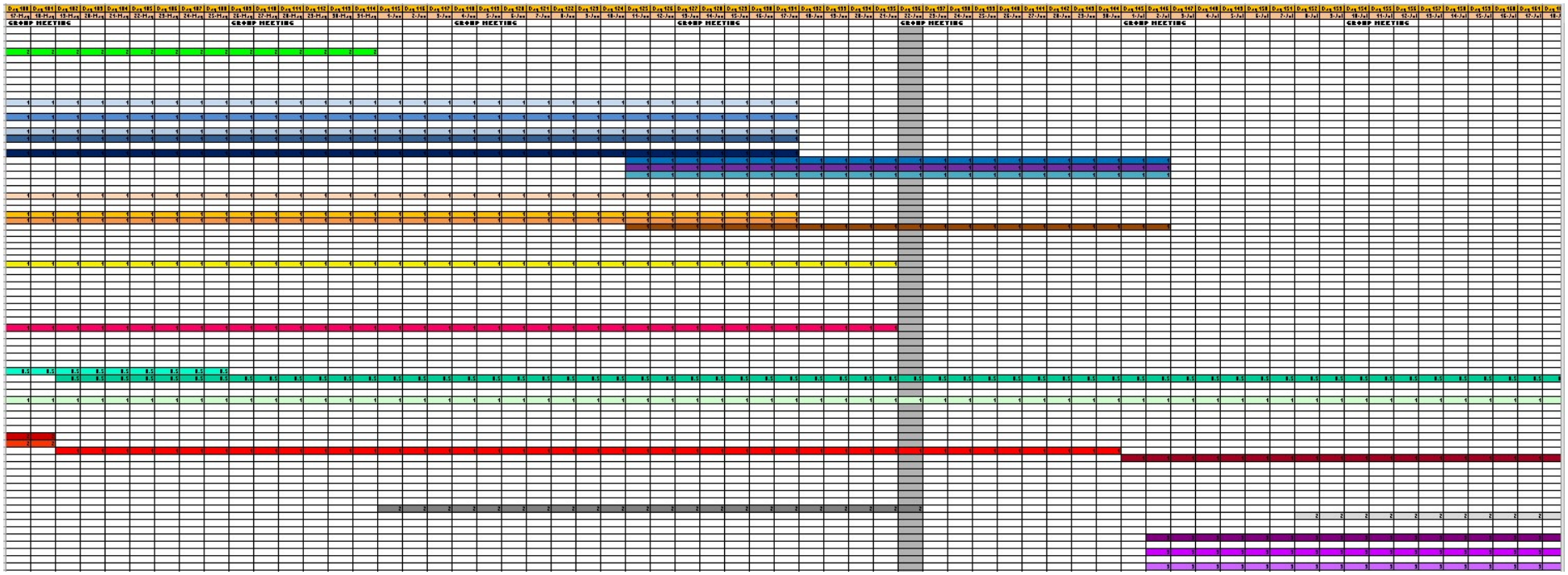

FIGURE 144. FULL GANTT CHART

Annex 33 Administrative Risks

General Administrative Risks								
#	Administrative Action	Failure Mode	Effects	Causes	S	O	RPN	Mitigative Action
1	Purchase of laser sensors	Purchase delayed due to delivery issues	Delay in sensor development schedule, possible failure to complete project on time	Vendor unreliability	9	3	27	Receive clearance to purchase sensors as early as possible and make the purchases immediately once clearance has been received. Always prioritize making the orders over tasks.
2	Purchase of electronics	Purchase delayed due to delivery issues or out of stock	Delay in power systems development schedule, possible failure to complete project on time	Vendor unreliability	9	3	27	Receive clearance to purchase sensors as early as possible and make the purchases immediately once clearance has been received. Always prioritize making the orders over tasks.
3	Purchase of structural materials	Purchase delayed due to delivery issues or out of stock	Delay in structural development schedule, possible failure to complete project on time	Vendor unreliability	9	3	27	Receive clearance to purchase sensors as early as possible and make the purchases immediately once clearance has been received. Always prioritize making the orders over tasks.
4	Test solutions in actual environment	Unable to gain access to actual track environment	Unable to fully confirm if the solution works in the operating environment	Due to SMRT's schedules, plans, safety considerations etc.	4	2	8	Check with SMRT one week in advance. If the testing is not allowed, proceed to begin constructing a more robust test environment using the tracks on campus
5	Make claims for purchases	Fail to claim due to receipt overdue or lost	Unable to utilize budget for project	Overlooked the receipt	5	1	5	Store receipts in folder once received
6	Store prototypes in a safe place	Unable to gain access to location to store prototypes	Losing or damaging the prototype	SUTD's administrative requirements/procedures	9	4	36	Check with Capstone Office in advance, if unsure, always store the prototype in a secure room
7	Meet industry mentor to discuss direction	Unable to meet mentor for extended period of time	Fail to engage stakeholder for the project	Mentor's busy schedule	5	5	25	Continue correspondence via WhatsApp and Email and check with mentor regularly to arrange a suitable meeting date/time
8	Budget the purchase of items for each sub-problem	Overspend on a specific sub-problem	Lack of budget for other sub-problems	Lack of discussion between group members when making purchase	3	1	3	Always announce purchase actions in the group chat
9	Construct prototypes safely	Group member injured due to unsafe construction of prototype	Delay in construction of prototype development schedule	Did not take safety precautions while working on prototype	7	2	14	Always consider safety first. If unsure on how to construct part of prototype, seek help from groupmates, other parties or FABLAB staff
		Components used to construct prototype are damaged during construction	Budget expenditure for specific sub problem increased to purchase replacement parts Delay in construction of prototype development schedule	Did not use the right methods when constructing the prototype	5	2	10	If unsure on how to construct part of prototype, seek help from groupmates, other parties or FABLAB staff
10	Test prototypes safely	Group member injured due to unsafe testing or prototype	Delay in construction of prototype development schedule	Did not take safety precautions while working on prototype	7	2	14	If unsure on how to construct part of prototype, seek help from groupmates, other parties or FABLAB staff
		Prototype is damaged during testing	Budget expenditure for specific sub problem increased to purchase replacement parts Delay in construction of prototype development schedule	Did not use the right methods when constructing the prototype	5	2	10	If unsure on how to construct part of prototype, seek help from groupmates, other parties or FABLAB staff
11	Save and share files with group in GDRIVE once certain milestones are completed	Fail to save/share files with group and computer damaged resulting in lost files	Delay in software development, submissions schedule	Computer accidentally damaged in combination with failure to share files	5	2	10	Always save your work regularly and upload it to a group platform when progress has been made

FIGURE 145. ADMINISTRATIVE RISKS

Annex 34 2D laser scanner exposure time experiment

This experiment was done to compare the effect of exposure time based on different environments, dark vs bright conditions and matte vs shiny rail surfaces. Ideally, we want to choose the minimum exposure time that obtains maximum coverage of the rail profile (no missing points).

Too low exposure time will result in missing points on the profile, while too high exposure time will make the laser sensor too sensitive to external light (as shown in the bright environment).

It is noted that maintenance operations are expected to be carried out at night in darker environments, thus somewhat higher exposure time can be tolerated. If tests show that the shiny surface measurement has too much noise in operational environment, a lens hood might need to be implemented.

Test	Measurement	Comments
Rusted rail in dark environment		
Rusted rail (matte surface) 100us Dark environment	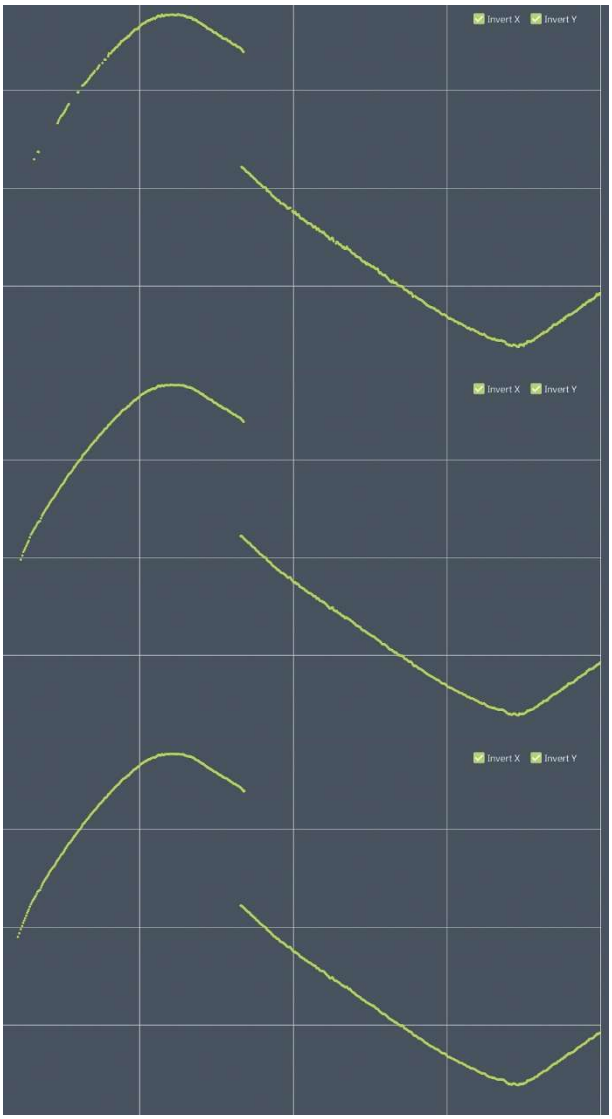	100us - 200us is too low. some points are missing from the head part of the rail profile.
Rusted rail (matte surface) 200us Dark environment		
Rusted rail (matte surface) 300us Dark environment		For matte surfaces, 300us seems to be optimal.

Rusted rail (matte surface)

1000us

Dark environment

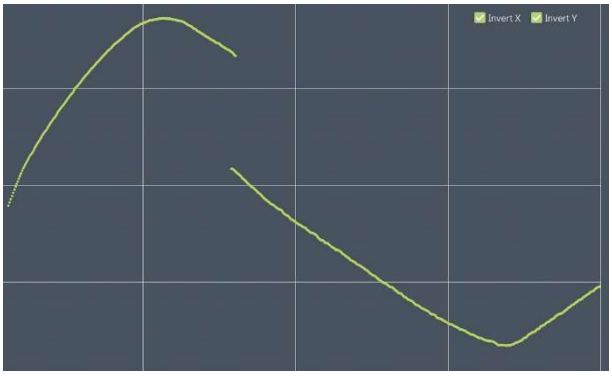

Even at 1000us, there are no additional points on the rail profile as compared to 300us, indicating that 300us already has maximum coverage.

Shiny rail in dark environment

Shiny rail (shiny surface)

100us

Dark environment

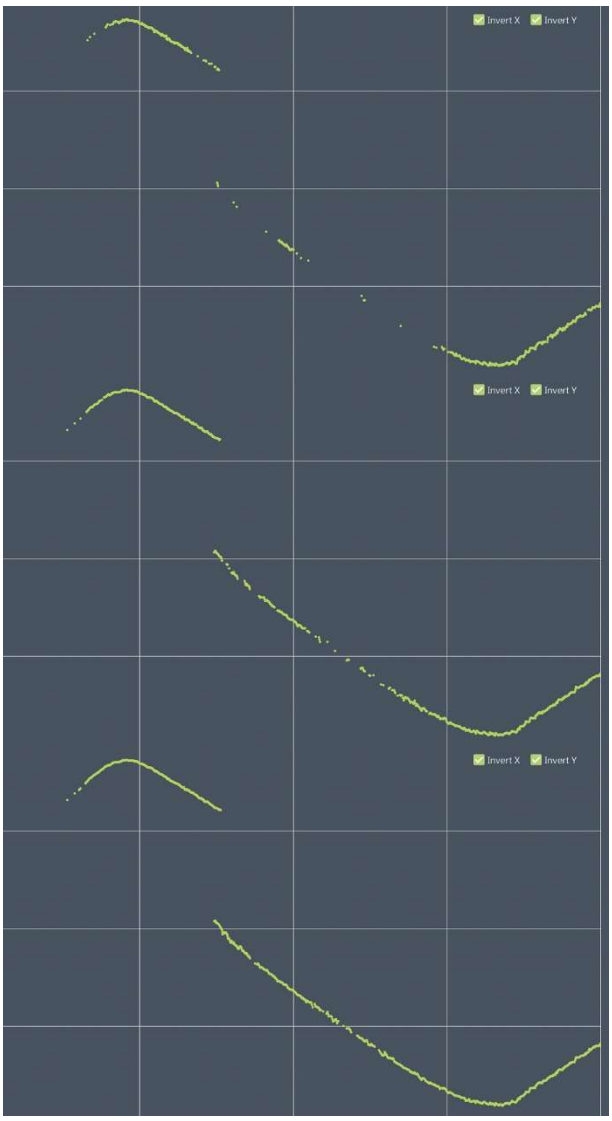

With a shiny rail, significantly more points are missing.

Shiny rail (shiny surface)

200us

Dark environment

As exposure time increases, more points can be observed.

Shiny rail (shiny surface)

300us

Dark environment

While 300us is optimal for matte surfaces, for shiny surfaces, it is still insufficient. A significant portion of the rail head is missing.

Shiny rail (shiny surface)

600us

Dark environment

Shiny rail (shiny surface)

1000us

Dark environment

Shiny rail (shiny surface)

1300us

Dark environment

Shiny rail (shiny surface)

1600us

Dark environment

Shiny rail (shiny surface)

2000us

Dark environment

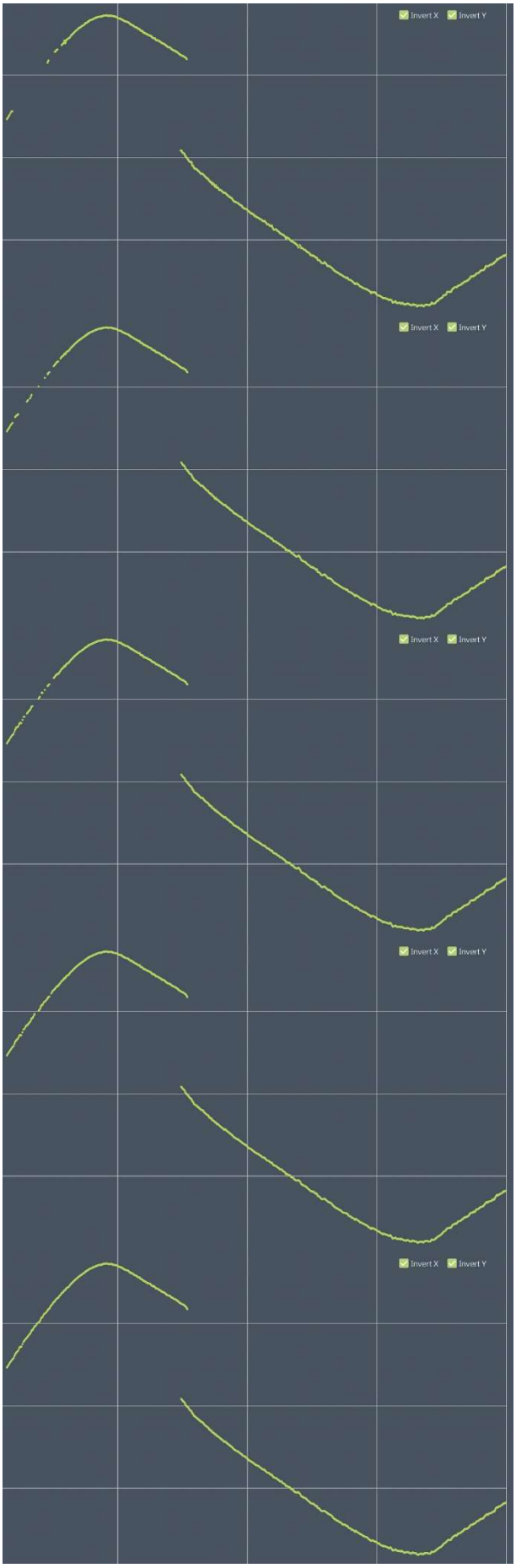

Shiny rail (shiny surface)

2300us

Dark environment

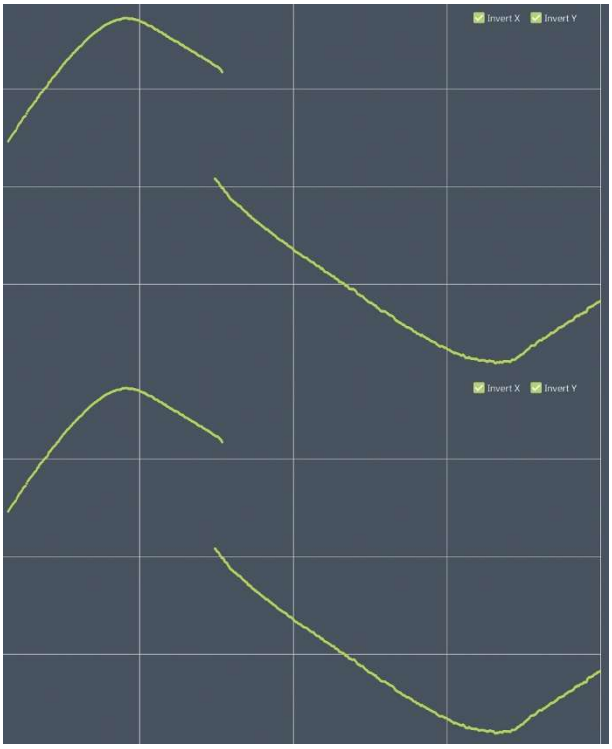

For shiny surfaces, 2300us seems to be optimal.

Shiny rail (shiny surface)

2600us

Dark environment

Number of points does not seem to increase further after 2300us, indicating that this is maximum profile coverage.

Rusted rail in bright environment

Rusted rail (matte surface)

100us

Bright environment

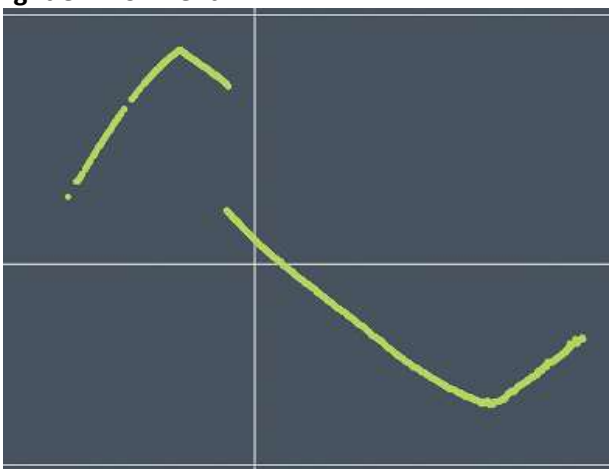

This test was done on a worn-out rail instead of a new rail sample. However, height of rail head does not affect this experiment.

It can be seen that a few points are missing.

Rusted rail (matte surface)

300us

Bright environment

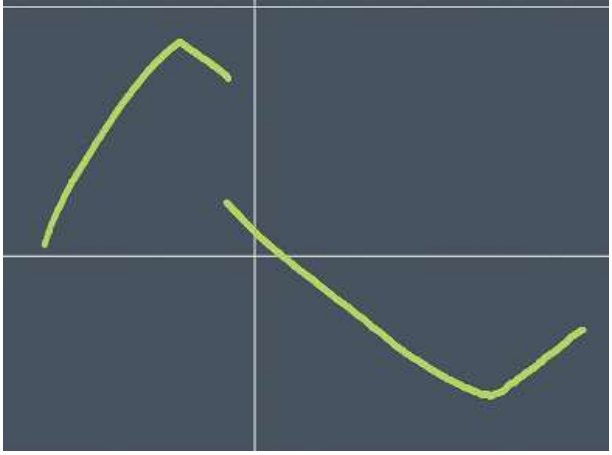

As compared to the dark environment, 300us again seems optimal for a matte surface.

Rusted rail (matte surface)

600us

Bright environment

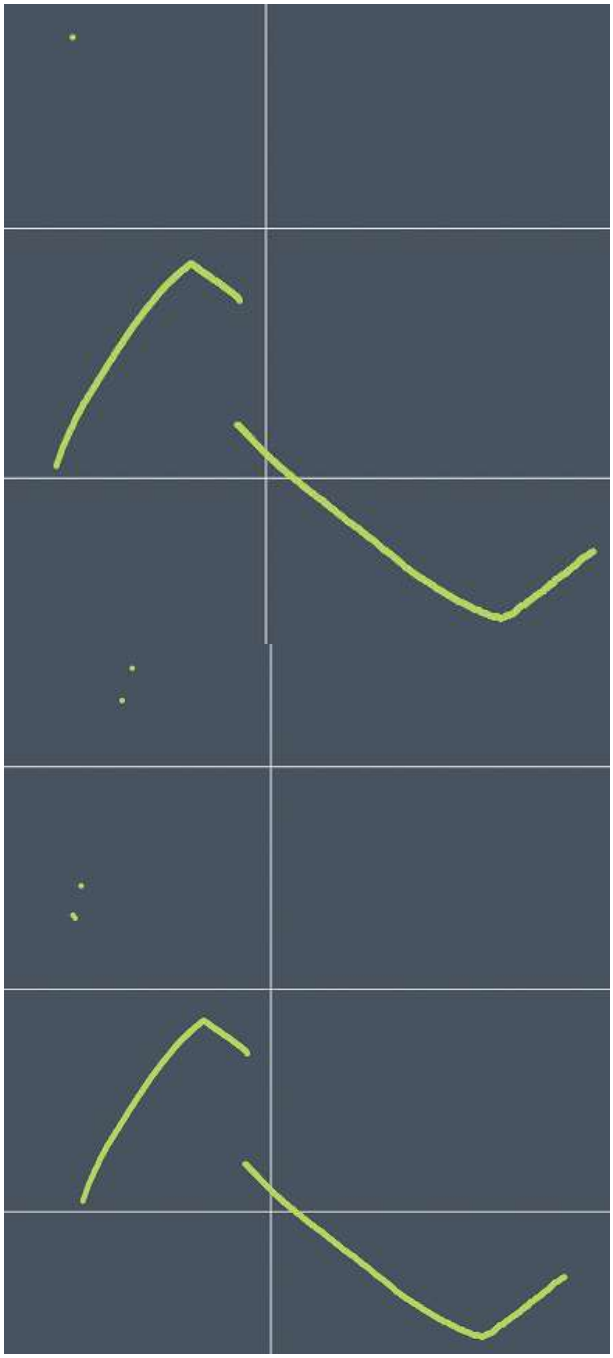

1 point of noise can be seen.

Rusted rail (matte surface)

800us

Bright environment

4 points of noise can be seen.

As exposure time increases, the amount of noise increases.

Rusted rail (matte surface)

1000us

Bright environment

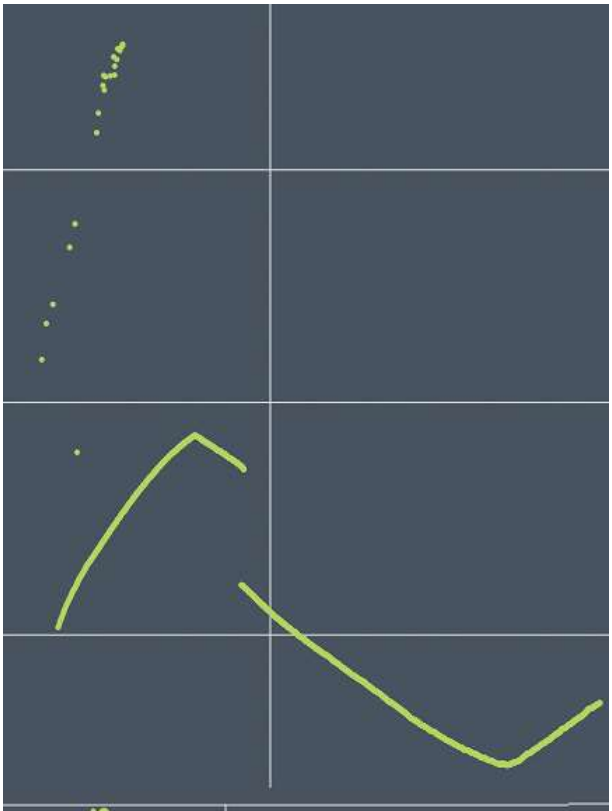

Based on this measurement, the noise can clearly be seen to appear at the edge of the 2D laser sensor's measuring range.
(The measuring range is tapered, being wide at the bottom and narrow at the top.)

Light entering from the edge is characteristic of lens flare. A possible mitigation to this issue is to implement a lens hood around the 2D laser sensor to block light from the edge.

Rusted rail (matte surface)

2000us

Bright environment

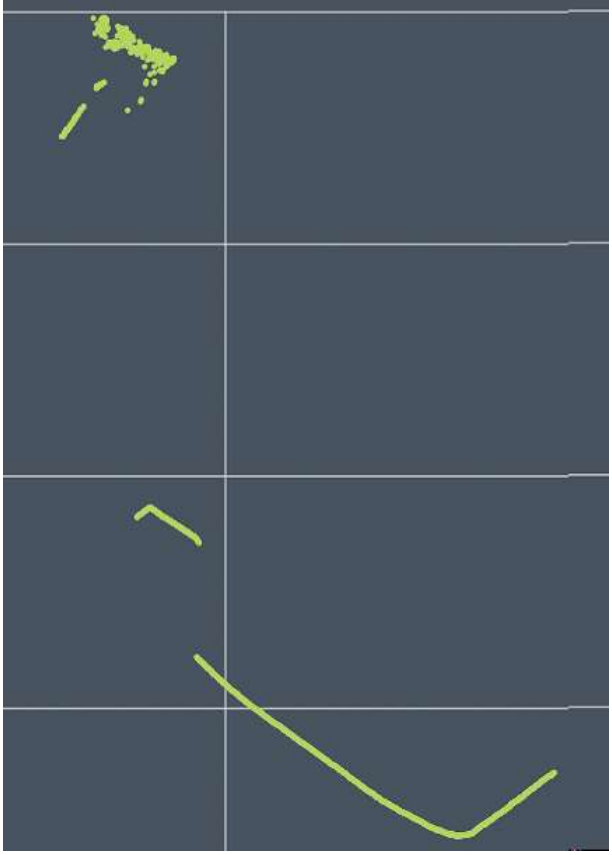

At 2000us, a very large amount of noise can be seen close to the upper limit of the laser sensor's measuring range.

Given that the source of the light is the same, it is likely that light is coming from the edge similar to lens flare.

Annex 35 Performance of ORCA against GRAW

PERFORMANCE SPECIFICATIONS COMPARISON				
CHARACTERISTICS	**ORCA**	**GRAW**	**CONSTRAINTS**	**COMMENTS**
INTERVAL OF MEASUREMENTS	≥ 0.1M	0.25/0.5M	MOVEMENT AT 2.5M/S	DATA SENDING PERIOD = 40MS
OVERVIEW OF PROFILES DURING MEASUREMENTS	TO BE COMPLETED	YES	TABLET PROCESSING POWER ALGORITHM PROCESSING EFFICIENCY	
RAIL PROFILE MEASUREMENT ACCURACY (Z-AXIS)	±0.10 - ±0.35MM	±0.3MM	RF625 (Z-AXIS) 100/250 SPECIFICATIONS	GRAW MEASUREMENTS OFF BY MM IN OPERATION
RAIL PROFILE MEASUREMENT ACCURACY (X-AXIS)	±0.15 - ±0.36MM	±0.3MM	RF625 (X-AXIS) 75/180 SPECIFICATIONS	GRAW MEASUREMENTS OFF BY MM IN OPERATION
RAIL WEAR PARAMETERS ACCURACY	±0.15 - ±0.36MM	±0.3MM	RF625 100/250-75/180 SPECIFICATIONS	GRAW MEASUREMENTS OFF BY MM IN OPERATION
AUTOMATIC ASSESSMENT OF RAIL PROFILE	TO BE COMPLETED	YES	COMPLETION OF RAIL ALIGNMENT ALGORITHM	
BACKLIT DISPLAY	YES	YES	INHERENT TO TABLET	
TRASFER TO PC	USB PENDRIVE/WIFI TRANSFER/ETHERNET	USB PENDRIVE	TABLET PORTS	
GRAPHICAL REPRESENTATION	YES	YES		
TRACK GAUGE RANGE	WITH 1435MM AS BASE REFERENCE, RANGE IS FROM -30.5MM TO 94.7MM	FROM -15 TO 50MM	ABTUS CONSTRUCTION AND WABASH 971 ROTARY ENCODER RANGE ORCA ANGLE RANGE: 0-68° WITH RESPECT TO TROLLEY FORWARD DIRECTION, FLANGE LENGTH = 135MM	BASE DISTANCE BETWEEN BEAMS = 1356.5MM DISTANCE FROM START OF ARM TO CENTER OF BEAM - 18.5MM (NEEDS TO BE MULTIPLED BY 2 SINCE THERE

GUARD RAIL GAUGE RANGE	WITH 1435MM AS BASE REFERENCE, RANGE IS FROM TO -52.5MM TO -111MM	N/A	ABTUS CONSTRUCTION AND WABASH 971 ROTARY ENCODER RANGE ORCA ANGLE RANGE: 0-75° WITH RESPECT TO TROLLEY FORWARD DIRECTION, FLANGE LENGTH = 60MM	ARE 2 ARMS) ADD BEARING RADIUS 11MM
CANT RANGE	≥± 200MM	±200MM	ABTUS CONSTRUCTION AND WABASH 971 ROTARY ENCODER RANGE ORCA ANGLE RANGE: 30-60° WITH RESPECT TO TROLLEY VERTICAL FACE, FLANGE LENGTH = 135MM	
VERTICAL IRREGULARITIES RANGE	±0.2MM	±2MM	WABASH 971 ROTARY ENCODER ACCURACY	
RAIL PROFILE	INNER RAIL PROFILE	FULL RAIL PROFILE		RAIL WEAR ON INNER SIDE IS LARGER
TRACK GAUGE ACCURACY	±0.1123MM	±0.5MM	WABASH 971 ROTARY ENCODER ACCURACY	
CANT ACCURACY	±2.848MM	±1.5MM	WABASH 971 ROTARY ENCODER ACCURACY	
VERTICAL IRREGULARITIES ACCURACY	±0.1021MM	±0.2MM	WABASH 971 ROTARY ENCODER ACCURACY	
HORIZONTAL RAIL HEAD WEAR ACCCURACY	±0.2MM	±0.3MM	RAIL ALIGNMENT ALGORITHM AND RF625 SCANNER ACCURACY	
VERTICAL RAIL HEAD ACCURACY	±0.2MM	±0.3MM	RAIL ALIGNMENT ALGORITHM AND RF625 SCANNER ACCURACY	
WEIGHT	28KG	30KG		ORCA SEPARABLE ARMS, GRAW INSEPERABLE
OPERATING CONDITIONS	FROM -20 TO 45 °C	FROM -20 TO 45 °C		

MEMORY CAPACITY	464KM	1400KM OR 2800KM		ORCA MEMORY EASILY UPGRADABLE
CONTINUOUS OPERATIONS	6H	3H		
DATA FORMATS	PDF, MS WORD, MS EXCEL	PDF, MS WORD, MS EXCEL, DXF		
TRACK TWIST	FOLLOWS SMRT CONVENTIONS	DOES NOT FOLLOW SMRT CONVENTIONS		
POWER SENSING	0-36V	N/A	LOW GRADE VOLTAGE SENSOR	USEFUL FOR DETERMINING IF THERE IS SUFFICIENT POWER TO COMPLETE A WORK

Annex 36 ORCA Circuit Schematics

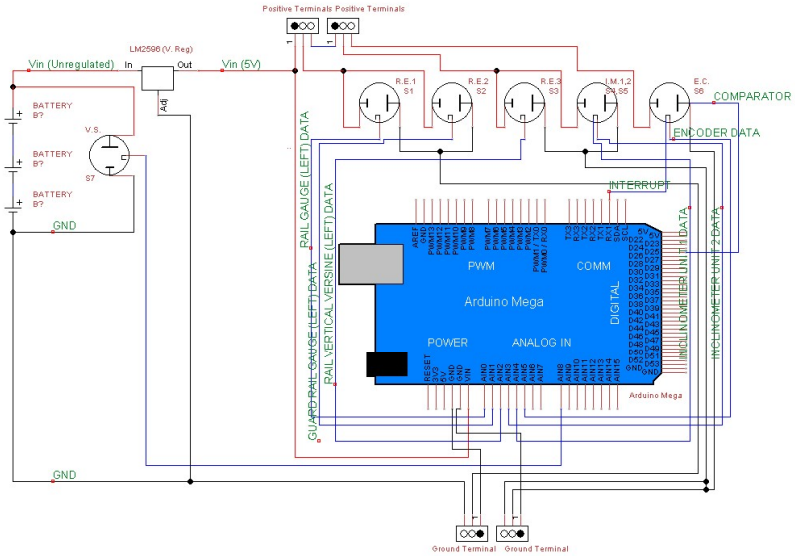

LEGEND: R.E.1 - ROTARY ENCODER 1
R.E.2 - ROTARY ENCODER 2
R.E.3 - ROTARY ENCODER 3
I.M.1,2 - INCLINOMETER UNITS 1,2
E.C. - ENCODER
V.S. - VOLTAGE SENSOR
RED WIRE - LIVE WIRES
BLUE WIRES - DATA TRANSMISSION
BLACK WIRES - GROUND
S1,S2,S3 - WABASH 971 RPS
S4,S5 MURATA INCLNMR' SCA61T-FAHH1G
S6 - HENGSTLER ENCODER RI38
S7 - VOLTAGE SENSOR HCMODU0047

*DATA PORTED OUT TO ETHERNET SWITCH VIA ETHERNET SHIELD

CONNECTIONS:

PIN A0 -> R.E.1	PIN A3 -> I.M.1	PIN A8 -> V.S.
PIN A1 -> R.E.2	PIN A4 -> I.M.2	PIN RX1 -> E.C. INTERRUPT
PIN A2 -> R.E.3	PIN A5 -> E.C.	PIN D25 -> COMPARATOR

Title ORCA ARM 1 CIRCUIT LAYOUT		
Author CHIN JOO ERN		
File \Users\jo ... ORCA ARM 1 CIRCUIT LAYOUT.dsn		Document
Revision 1.0	Date 6/9/2018	Sheets 1 of 1

FIGURE 146. ORCA ARM 1

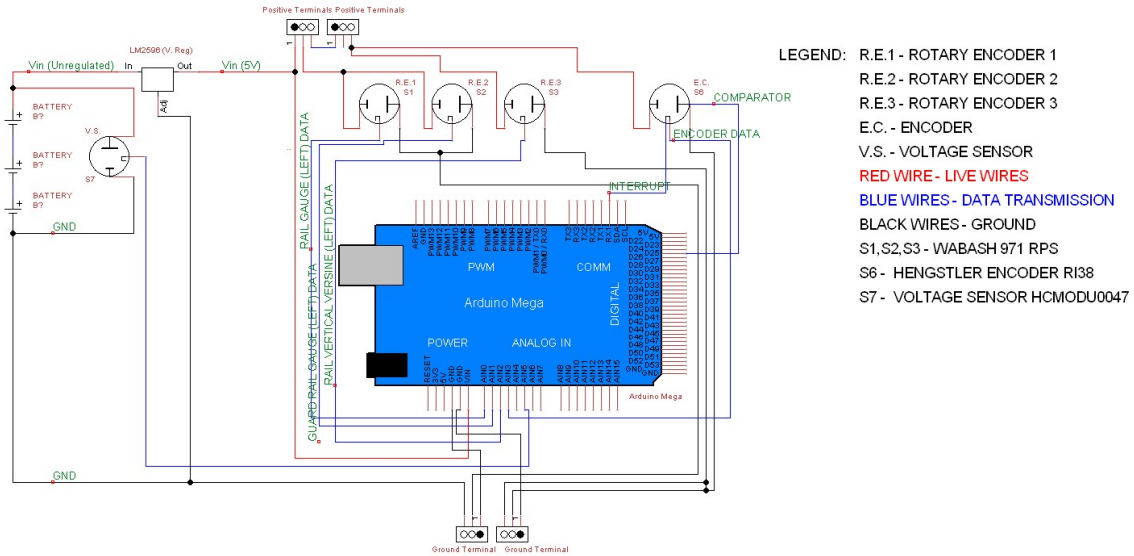

LEGEND:
- R.E.1 - ROTARY ENCODER 1
- R.E.2 - ROTARY ENCODER 2
- R.E.3 - ROTARY ENCODER 3
- E.C. - ENCODER
- V.S. - VOLTAGE SENSOR
- RED WIRE - LIVE WIRES
- BLUE WIRES - DATA TRANSMISSION
- BLACK WIRES - GROUND
- S1,S2,S3 - WABASH 971 RPS
- S6 - HENGSTLER ENCODER RI38
- S7 - VOLTAGE SENSOR HCMODU0047

*DATA PORTED OUT TO ETHERNET SWITCH VIA ETHERNET SHIELD

CONNECTIONS: PIN A0 -> R.E.1 PIN A3 -> E.C.
PIN A1 -> R.E.2 PIN A5 -> V.S.
PIN A2 -> R.E.3

Title ORCA ARM 2 CIRCUIT LAYOUT		
Author CHIN JOO ERN		
File \Users\jo ... ORCA ARM 2 CIRCUIT LAYOUT.dsn		Document
Revision 1.0	Date 6/9/2018	Sheets 1 of 1

FIGURE 147. ORCA ARM 2

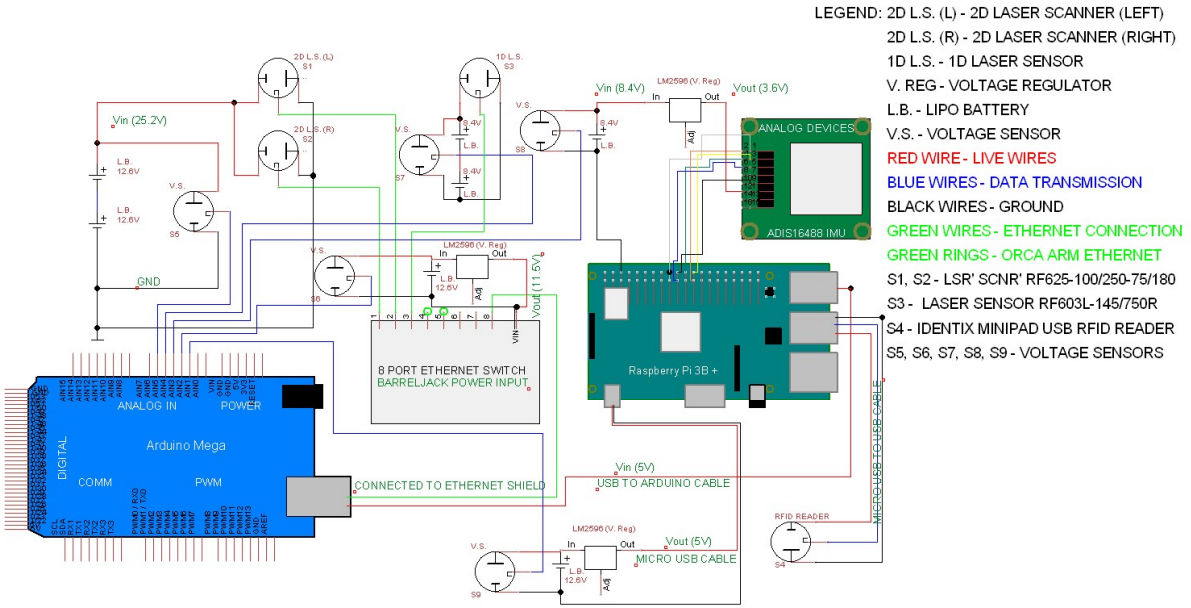

*CONNECTIONS MAY NOT BE PIN BASED, HENCE MULTIPLE 'WIRES' MAY CONNECT TO A SINGLE CONNECTION DEPENDING ON THE CONNECTION TYPE

CONNECTIONS:

ARDUNO POWER -> RPI USB	ARDUNO PIN A5 -> 2.D. L.S. (L)/(R)	I.M.U. PIN 6 -> RPI PIN 5
ARDUINO PIN A1 -> RPI V.S.	I.M.U. PIN 1 -> RPI PIN 18	I.M.U. PIN 7 -> RPI PIN 24
ARDUINO PIN A2 -> ETHERNET SWITCH	I.M.U. PIN 2 -> RPI PIN 24	I.M.U. PIN 9 -> RPI PIN 19
ARDUINO PIN A3 -> ADIS16488 IMU. V,S,	I.M.U. PIN 3 -> RPI PIN 23	I.M.U. PIN 12 -> 3.6V VOUT
ARDUINO PIN A4 -> 1D L.S. V.S.	I.M.U. PIN 4 -> RPI PIN 21	

Title	ORCA CORE CIRCUIT LAYOUT	
Author	CHIN JOO ERN	
File	.Users\joo ... ORCA CORE CIRCUIT LAYOUT.dsn	Document
Revision 1.0	Date 6/17/2018	Sheets 1 of 1

FIGURE 148. ORCA MAIN ELECTRONICS

Annex 37 ORCA Data Flow Diagram (Refer to softcopy)

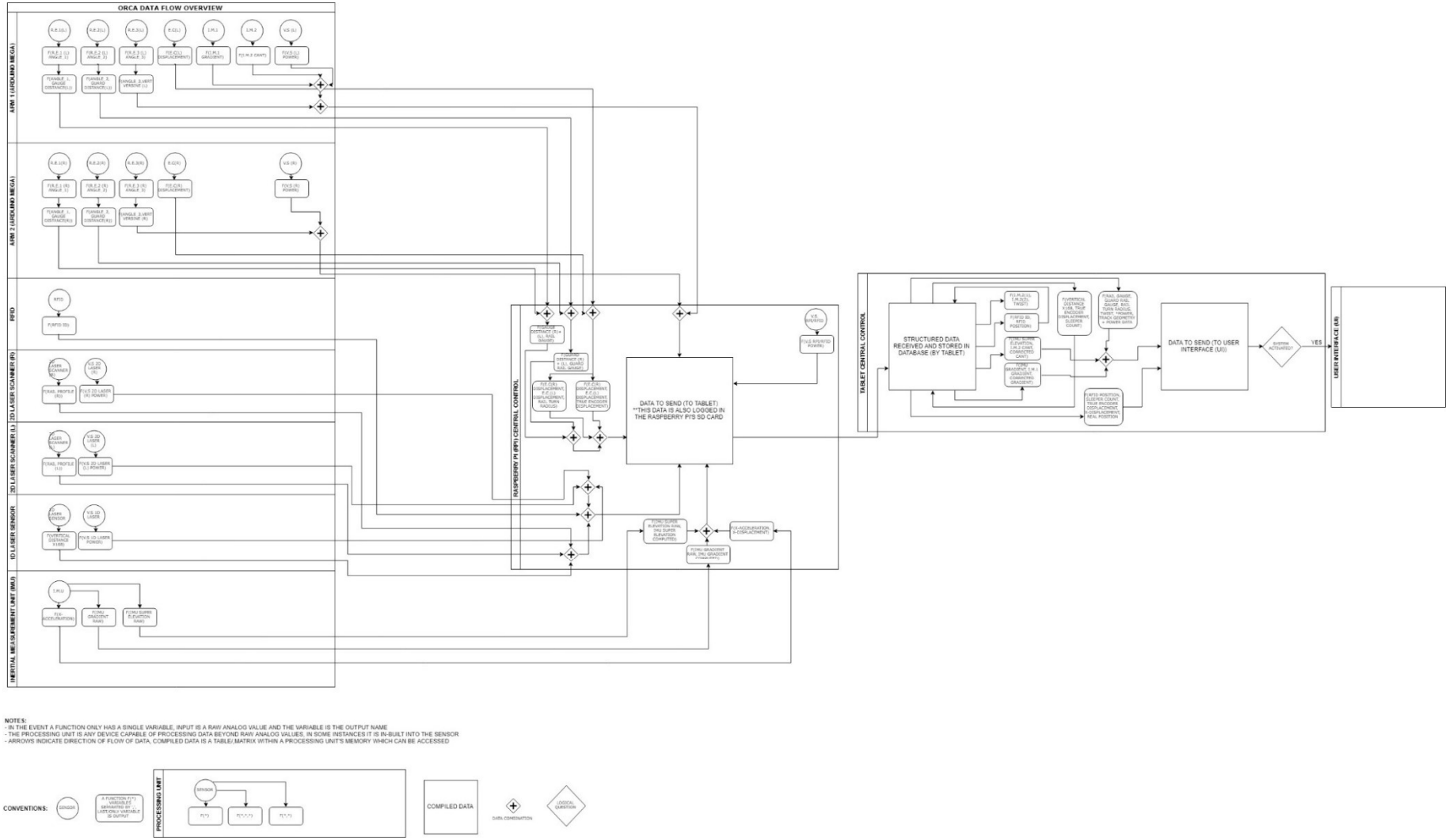

FIGURE 149. ORCA DATAFLOW DIAGRAM

ORCA LASER RAIL PROFILE TROLLEY MAINTENANCE MANUAL

INSTRUCTIONS ON HOW TO MAINTAIN THE ORCA TROLLEY

AUTHORS: CHIN JOO ERN, KEVIN TAN, ERIC TEO, NICHOLAS NG, LAM TENG FOONG & TOH WEI QI

RAILORDS

RAILORDS| 18th July 2018

Table of Contents

1. Purpose 2
2. Scope 2
3. Venue/Location 2
4. Duration 2
5. Definitions 3
6. Abbreviations 4
7. Responsibilities 4
8. Qualifications 4
9. Tools, Equipment, Vehicles & PPE 4
10. Hazardous Material 4
11. Risk Assessment & Safety Measures 4
12. Permit to Work 5
13. Maintenance Procedures 5
13.1 Sensor Calibration 5
13.2 Mechanical Replacements 7
13.3 Battery Replacement 8
13.4 Sensor Replacement 8
13.5 Electronics Maintenance 9
14. References 10
15. Review of Document 10

INSTRUCTION TITLE: ORCA LASER RAIL PROFILE TROLLEY MAINTENANCE

INSTRUCTION NO.: VERSION 0.0

1) PURPOSE

The purpose of this manual is to provide detailed instructions on how to maintain the Orca in both the short term and long term.

2) SCOPE

To provide users with comprehensive instructions for the maintenance of the Orca laser rail profile trolley. These include:

a) Sensor Calibration
b) Mechanical Replacements
c) Battery Replacement
d) Sensor Replacement
e) Electronics Maintenance

3) VENUE/LOCATION

Maintenance is to be carried out in Bishan Depot.

4) PERIOD/DURATION

a) Sensor Calibration – annual maintenance, required time: 30 minutes
b) Mechanical Replacements – annual replacement, required time: 30 minutes
c) Battery Replacement – annual replacement, required time: 2 hours
d) Sensor Replacement – 10 years or as required, required time: up to 2 months
e) Electronics Maintenance – biannual maintenance, required time: 4 hours

5) DEFINITIONS

ORCA (DEPLOYED)

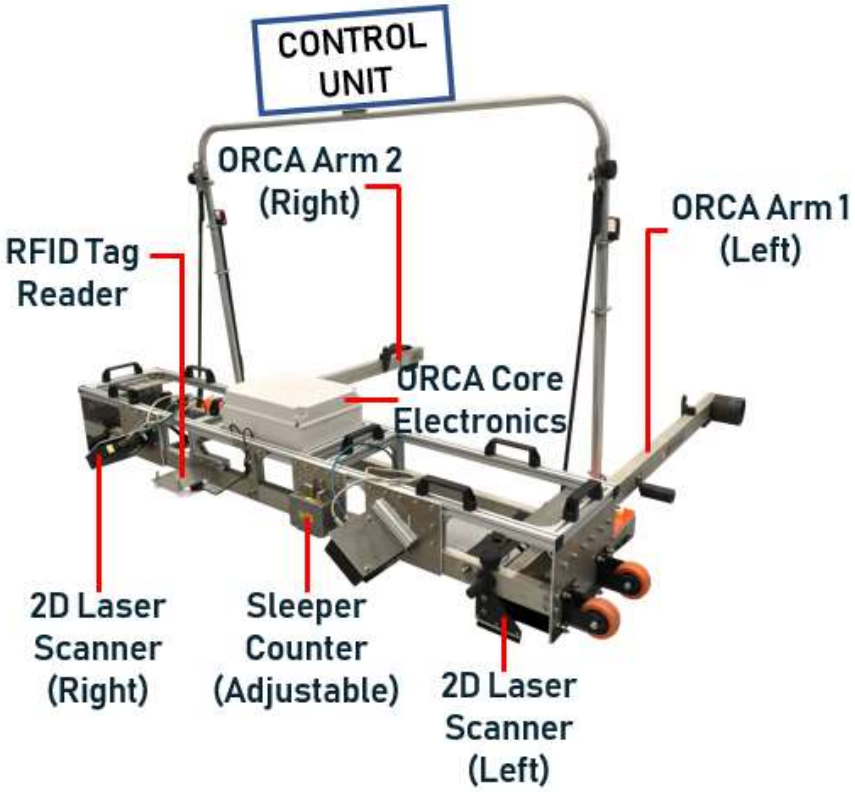

ORCA (COMPRESSED)

6) ABBREVIATIONS

a) AE – Assistant Engineer
b) TO – Technical Officer
c) OMI – Orca Measurement Interface

7) RESPONSIBILITIES

a) AE/s – Deploy staff and supervise maintenance to be carried out
b) AE/s & TO/s – Perform maintenance as outlined in this document

8) QUALIFICATIONS

Orca maintenance training completed.

9) TOOLS, EQUIPMENT, ELECTRICAL COMPONENTS, PROGRAMS

a) ORCA Laser Rail Profile Trolley Frame
b) Control Unit
c) 2D Laser Scanner (Right)
d) 2D Laser Scanner (Left)
e) Soldering Kit

f) Heat Shrink
g) Voltage Regulators
h) Laptop
i) USB-B to USB-A Cable Adapter
j) Ethernet Cable
k) Spare Wheels
l) AWG Gauge 15-18 Wire (Red and Black)

10) HAZARDOUS MATERIAL

N.A.

11) RISK ASSESSMENT & SAFETY MEASURES

Do not expose the Li-ion batteries to excessive heat or impact.

Do not repair the electrical connections while the Li-ion batteries are on.

Do not look directly at the laser beams.

Do not use excessive force to remove or disconnect any of the components

12) PERMIT TO WORK

N.A.

13) MAINTENANCE PROCEDURES

13.1) Sensor Calibration

The sensors used in the Orca generally do not require maintenance or calibration until their end of life. The full list of sensor lifespans can be found in **Annex A** - *Orca Component Lifespans*. Most sensors have already been calibrated and will only produce erroneous data in the event of mechanical failure (e.g. damaged mounts resulting in change in angle position, broken flanges) or by reaching the end of their lifespans. Therefore, the initial calibration should begin with a visual inspection of the sensor mounts and extensions. Refer to **Annex B** - *Orca Sensor Mount Technical Drawings* to determine the correct positions for each of the sensors.

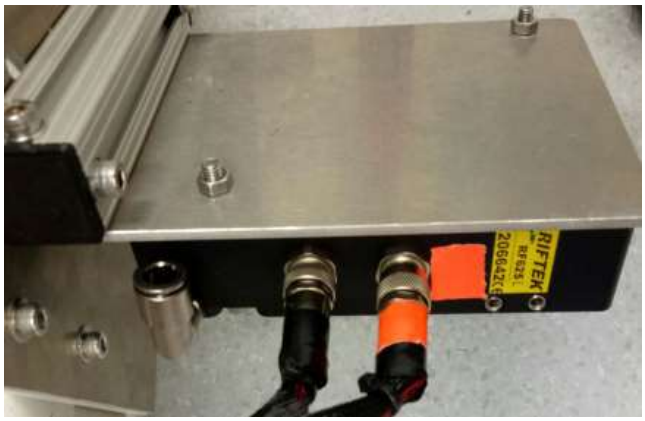

FIGURE 150. 2D LASER SCANNERS HAVE A LONG LIFESPAN IF TREATED WITH CARE.

2D laser scanners are susceptible to damage by impact and scratches especially at the glass lenses that protect the lasers inside the sensor. If the lenses are scratched, they will need to be replaced, if not readings will be affected. Additional lenses are provided in the aluminum case that comes with the scanners. Aside from this, the sensors are expected to last 50,000 hours without requiring replacement of parts.

FIGURE 151. THE ORCA ARMS (RIGHT AND LEFT) HAVE COMPACT SENSITIVE CIRCUITRY STORED BENEATH EACH OF THE LIDS.

The sensors in each of the Orca's Arms are linked to a central processing hub located beneath each of the orange lids. Both the sensors and circuitry in the Arms are protected by strong shells, however, subjecting the Arms to heavy shock could possible cause components to dislodge. In such an event, the user will be required to refer to the

circuit layout diagrams (see **Annex C –** *Orca Circuit Diagrams*) to determine which connection has been broken, or isolate the parts which need to be replaced.

FIGURE 152. RFID READER PROTECTED BY ACRYLIC SHELL.

RFID readers are sensitive devices with complex circuitry located within their plastic shells. The RFID reader used on the Orca is not designed to withstand heavy shock and should never be subjected to unnecessary impact.

13.2)

FIGURE 153. 1D LASER DISPLACEMENT SENSOR WITH STEEL HOUSING.

The 1D laser scanner comes with a protective housing that can allow it to withstand impact from any accidental knocks in the field. However, such situations should still be avoided. Additionally, due to this housing, and the position of the 1D laser, it can be left on the Orca even after it has been compressed for transportation.

13.3) Mechanical Replacements

The Orca's mechanical structure is constructed out of aluminum extrusions that are resistant to rusting and bending. However, the wheels of the Orca will still require replacement once a year as the diameter of the wheel changes as it is worn out by friction against the rails. Additionally, the wheels need to be removed so that the shaft on which it is mounted can be cleaned, this ensures that the encoder which measures the distance travelled by the trolley through the wheel's rolling can function optimally.

FIGURE 154. THE ORCA'S WHEEL CAN BE WORN OUT BY FRICTION AGAINST THE RAILS.

Battery Maintenance/Replacement

The Orca is powered by 4-cell Lithium-ion batteries which operate at between 12.6V and 10.6V. The recommended discharge limit on the Lithium-ion batteries is 80% of max possible discharge, which is calculated to be approximately: (12.6-10.6)*(1-0.8) = 0.4V. This means that ideally, the batteries are charged to maximum before operation and allowed to discharge only up to 12.2 volts at the end of the operation. The current battery set-up allows for such treatment of the batteries due to parallel arrangements of the batteries which reduce the voltage drop across an operation. However, it is still critical that the batteries are always fully recharged after the operation, this is due to the fact that if the batteries are discharged below 10.6V, they may enter a state of 'over-discharge' which permanently prevents them from being recharged.

13.4)

13.5)

FIGURE 155. LITHIUM-ION BATTERIES USED IN THE ORCA.

It is important to note that even if the batteries are treated with care, over time the battery life will still decrease and eventually they will complete a limited number of discharge cycles before having a capacity that renders them unusable for the Orca's operations. In such an event, replacement batteries will need to be made.

Sensor Replacement

Spare sensors should be purchased 3 months in advance of the recommended replacement dates presented in the *Orca Component Lifespans* document so as to avoid unnecessary Orca maintenance delays in the event of premature sensor failure. This practice is recommended for all other components on the Orca as well.

Electronics Maintenance

Maintenance of electronics on the Orca involves the reconnection of wires to components, or components onto printed circuit boards in the event a disconnection occurs. Failures due to disconnection of components are easily identifiable through the OMI which informs the user of the sensors that have failed through its diagnostics function. Once the failed sensor has been identified, check the circuit documentation for the specific circuit which the sensor is located in and look for the connection which has been broken. Fix the connection by re-soldering AWG Gauge 15-18 wires to replace the broken connections. Remember to insulate exposed wire junctions with heat shrink. Alternatively, some of the junctions in the Orca are made of external terminals, in the event a wire is disconnected from the terminal, refer to the circuit documentations to reconnect the wire correctly.

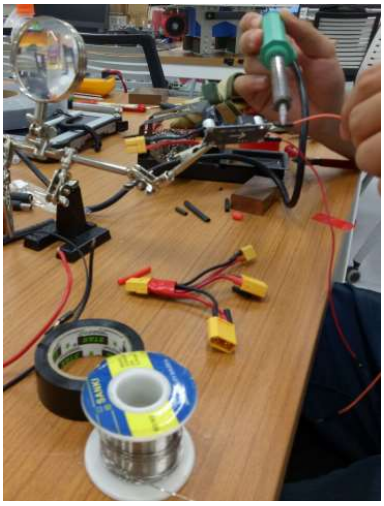

FIGURE 156. TO FIX THE ELECTRICAL CONNECTIONS, SOLDERING SKILLS MAY BE REQUIRED.

Always check if the connections made are secure and that all conducting interfaces are insulated at the end of the maintenance. Furthermore, it is critical to ensure

that the connections made are correct as an incorrectly connected circuit can damage all components within the circuit or start a fire resulting in even larger problems.

14) REFERENCES

i) Orca Component Lifespans
ii) Orca Sensor Mount Technical Drawings
iii) Orca Circuit Diagrams

15) REVIEW OF DOCUMENT

Document to be reviewed within first 3 months of the first issue.

Annex A

Sensor	Lifespan	Repair	Replace	Recommended Replacement Date	Last Replaced	Comments
2D Scanner (Left)	50000 hours	RIFTEK <info@riftek.com>; sales@optocom.com.my;'RIFTEK sensors' <rifteksensor@hotmail.com>	RIFTEK <info@riftek.com>; sales@optocom.com.my;'RIFTEK sensors' <rifteksensor@hotmail.com>	18/7/2038	1/7/2018	
2D Scanner (Right)	50000 hours			18/7/2038	1/7/2018	
1D Laser Displacement Sensor	50000 hours			18/7/2038	1/7/2018	
RFID Reader	Unspecified	N.A.	https://atlasrfidstore.com/identix-minipad-usb-rfid-reader/	18/7/2021	1/7/2018	unknown, when defective, note last replaced date and take reference from there
Rotary Encoder	5 x 10^6 Full Cycles	N.A.	https://www.atpower.com/products/wabash-sensor-971rps	18/7/2021	1/7/2018	*lifespan actually unknown, when defective, note last replaced date and take reference from there
Quadrature Encoder	Unspecified	N.A.	https://sg.rs-online.com/web/p/rotary-encoders/2914232/	18/7/2021	1/7/2018	*current model runs on 2000 pulses per revolution, will need to reprogram Arduinos if encoder is changed
Voltage Sensor	Unspecified	N.A.	https://lazada.sg/products/lm2596s-step-down-power-supply-module-dc-to-dc-voltage-regulator-buck-converter-export-intl-i6259259-s7883578.html?	18/7/2021	1/7/2018	*lifespan actually unknown, when defective, note last replaced date and take reference from there
Lithium-ion Batteries	500 cycles	N.A.	http://dx.com/p/dc-1298a-9800mah-super-rechargeable-polymer-lithium-ion-battery-blue-436418#.W09jjtIzaUk	18/12/2019	1/7/2018	*replacement batteries purchased should be of identical voltage and similar or higher battery capacity (mAh)

Annex B

1D Laser Scanner Mounting Position

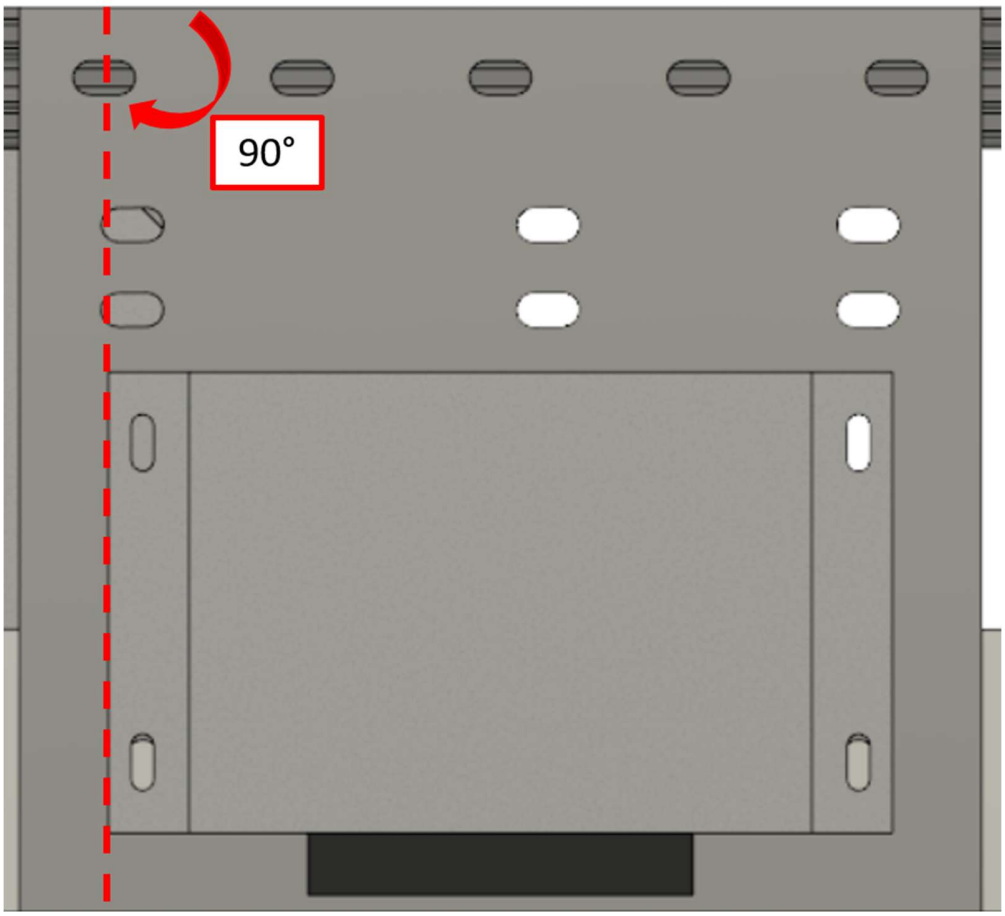

2D Laser Scanner Mounting Position

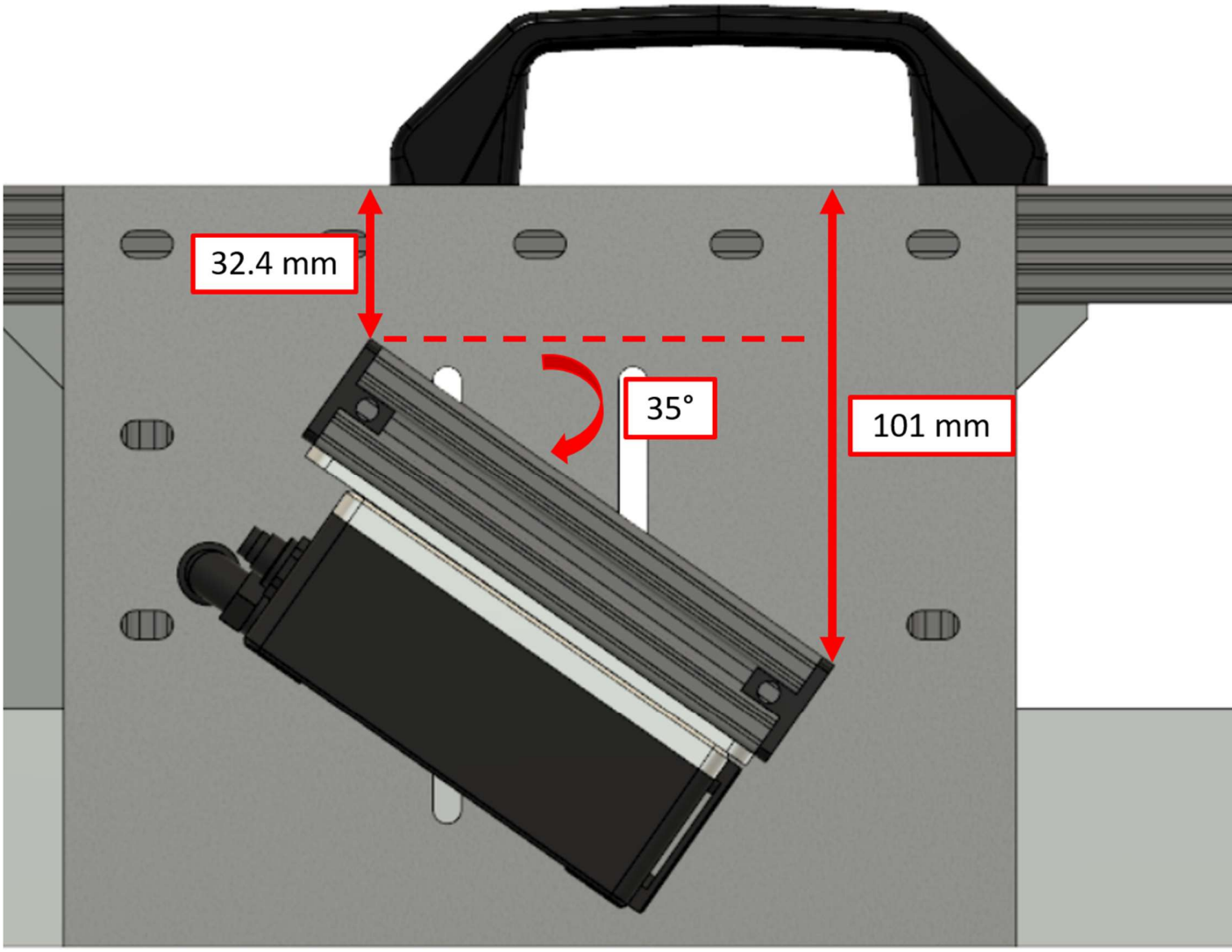

Vertical Versine Rotary Encoder Flange Position/Range

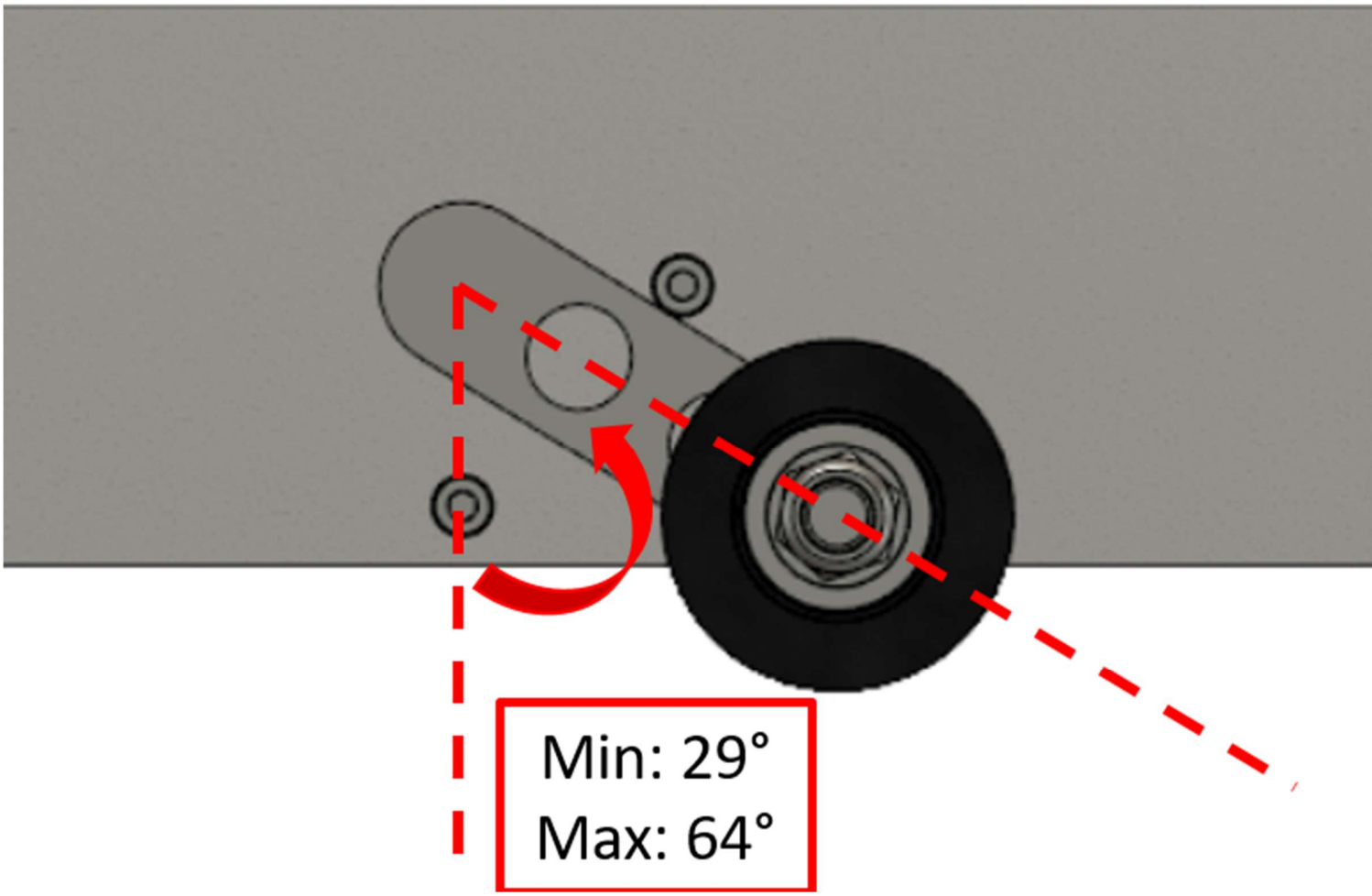

Rail Gauge and Guard Rail Gauge Rotary Encoder Flange Position/Range

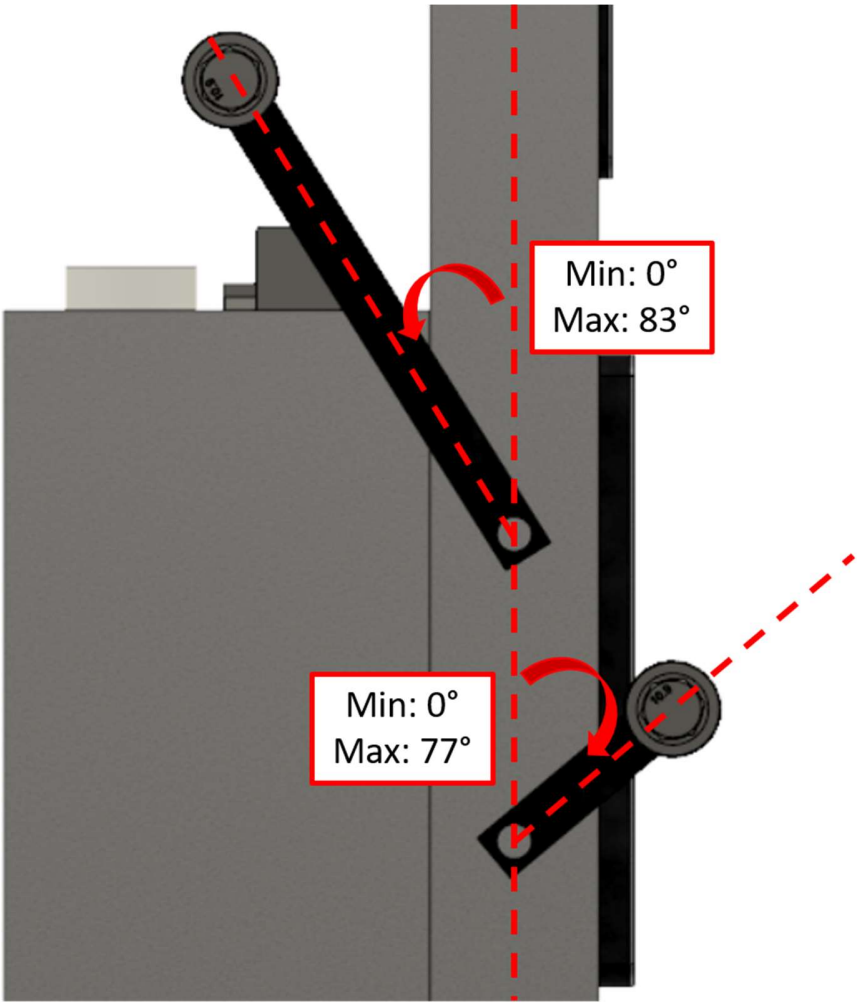

INSTRUCTION TITLE: ORCA LASER RAIL PROFILE TROLLEY MAINTENANCE

INSTRUCTION NO.: VERSION 0.0

LEGEND: R.E.1 - ROTARY ENCODER 1
R.E.2 - ROTARY ENCODER 2
R.E.3 - ROTARY ENCODER 3
I.M.1,2 - INCLINOMETER UNITS 1,2
E.C. - ENCODER
V.S. - VOLTAGE SENSOR
RED WIRE - LIVE WIRES
BLUE WIRES - DATA TRANSMISSION
BLACK WIRES - GROUND
S1,S2,S3 - WABASH 971 RPS
S4,S5 MURATA INCLNMR' SCA61T-FAHH1G
S6 - HENGSTLER ENCODER RI38
S7 - VOLTAGE SENSOR HCMODU0047

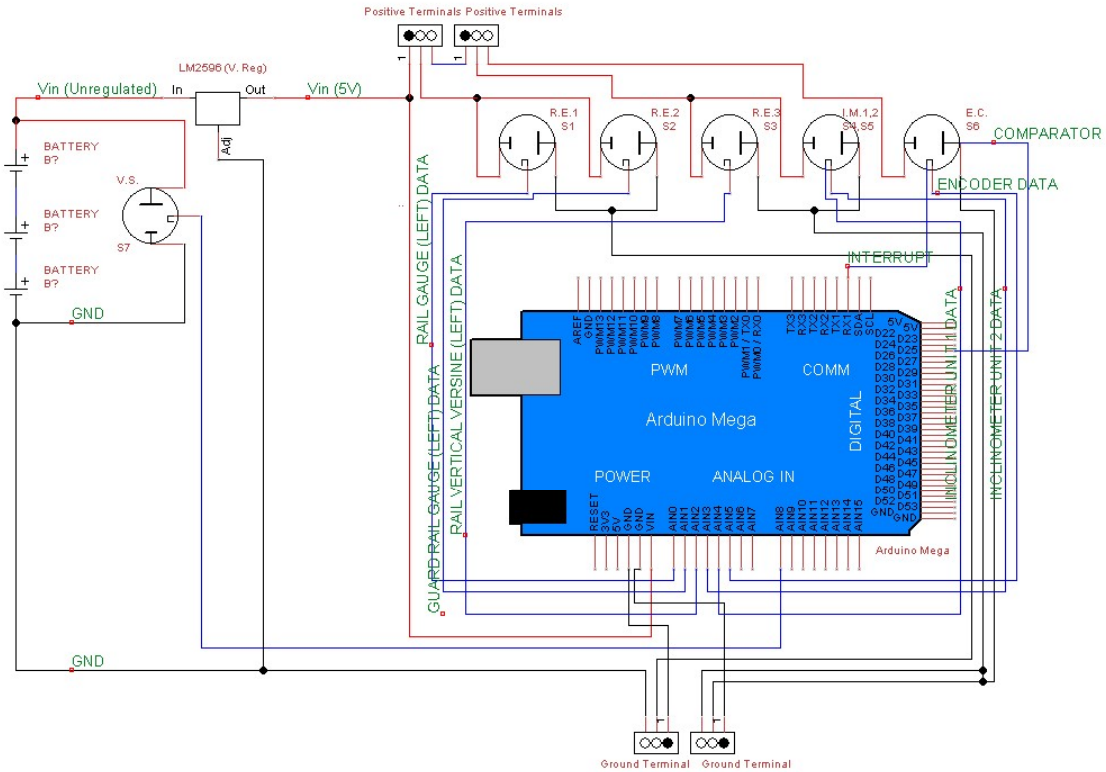

*DATA PORTED OUT TO ETHERNET SWITCH VIA ETHERNET SHIELD

CONNECTIONS:

PIN A0 -> R.E.1	PIN A3 -> I.M.1	PIN A8 -> V.S.
PIN A1 -> R.E.2	PIN A4 -> I.M.2	PIN RX1 -> E.C. INTERRUPT
PIN A2 -> R.E.3	PIN A5 -> E.C.	PIN D25 -> COMPARATOR

Title ORCA ARM 1 CIRCUIT LAYOUT		
Author CHIN JOO ERN		
File \Users\jo ... ORCA ARM 1 CIRCUIT LAYOUT.dsn		Document
Revision 1.0	Date 6/9/2018	Sheets 1 of 1

INSTRUCTION TITLE: ORCA LASER RAIL PROFILE TROLLEY MAINTENANCE

INSTRUCTION NO.: VERSION 0.0

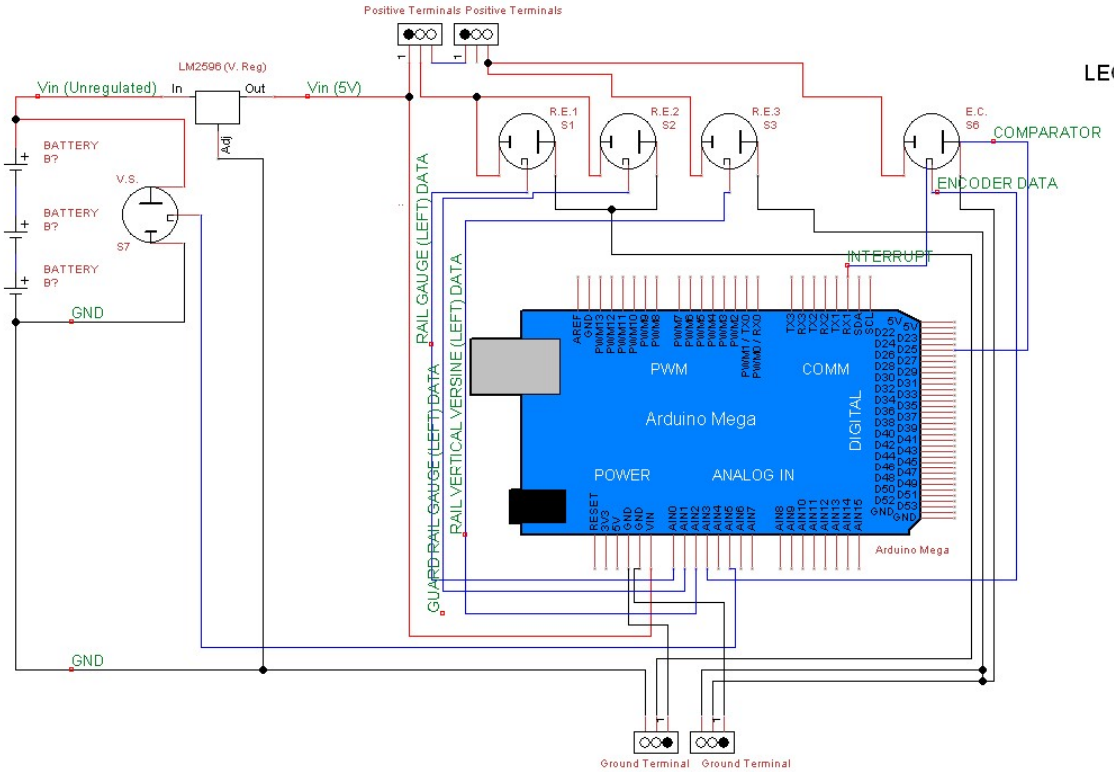

LEGEND:
- R.E.1 - ROTARY ENCODER 1
- R.E.2 - ROTARY ENCODER 2
- R.E.3 - ROTARY ENCODER 3
- E.C. - ENCODER
- V.S. - VOLTAGE SENSOR
- RED WIRE - LIVE WIRES
- BLUE WIRES - DATA TRANSMISSION
- BLACK WIRES - GROUND
- S1,S2,S3 - WABASH 971 RPS
- S6 - HENGSTLER ENCODER RI38
- S7 - VOLTAGE SENSOR HCMODU0047

*DATA PORTED OUT TO ETHERNET SWITCH VIA ETHERNET SHIELD

CONNECTIONS:
- PIN A0 -> R.E.1
- PIN A1 -> R.E.2
- PIN A2 -> R.E.3
- PIN A3 -> E.C.
- PIN A5 -> V.S.

Title: ORCA ARM 2 CIRCUIT LAYOUT		
Author: CHIN JOO ERN		
File: \Users\jo ... ORCA ARM 2 CIRCUIT LAYOUT.dsn		Document
Revision: 1.0	Date: 6/9/2018	Sheets: 1 of 1

INSTRUCTION TITLE: ORCA LASER RAIL PROFILE TROLLEY MAINTENANCE

INSTRUCTION NO.: VERSION 0.0

LEGEND: 2D L.S. (L) - 2D LASER SCANNER (LEFT)
2D L.S. (R) - 2D LASER SCANNER (RIGHT)
1D L.S. - 1D LASER SENSOR
V. REG - VOLTAGE REGULATOR
L.B. - LIPO BATTERY
V.S. - VOLTAGE SENSOR
RED WIRE - LIVE WIRES
BLUE WIRES - DATA TRANSMISSION
BLACK WIRES - GROUND
GREEN WIRES - ETHERNET CONNECTION
GREEN RINGS - ORCA ARM ETHERNET
S1, S2 - LSR' SCNR' RF625-100/250-75/180
S3 - LASER SENSOR RF603L-145/750R
S4 - IDENTIX MINIPAD USB RFID READER
S5, S6, S7, S8, S9 - VOLTAGE SENSORS

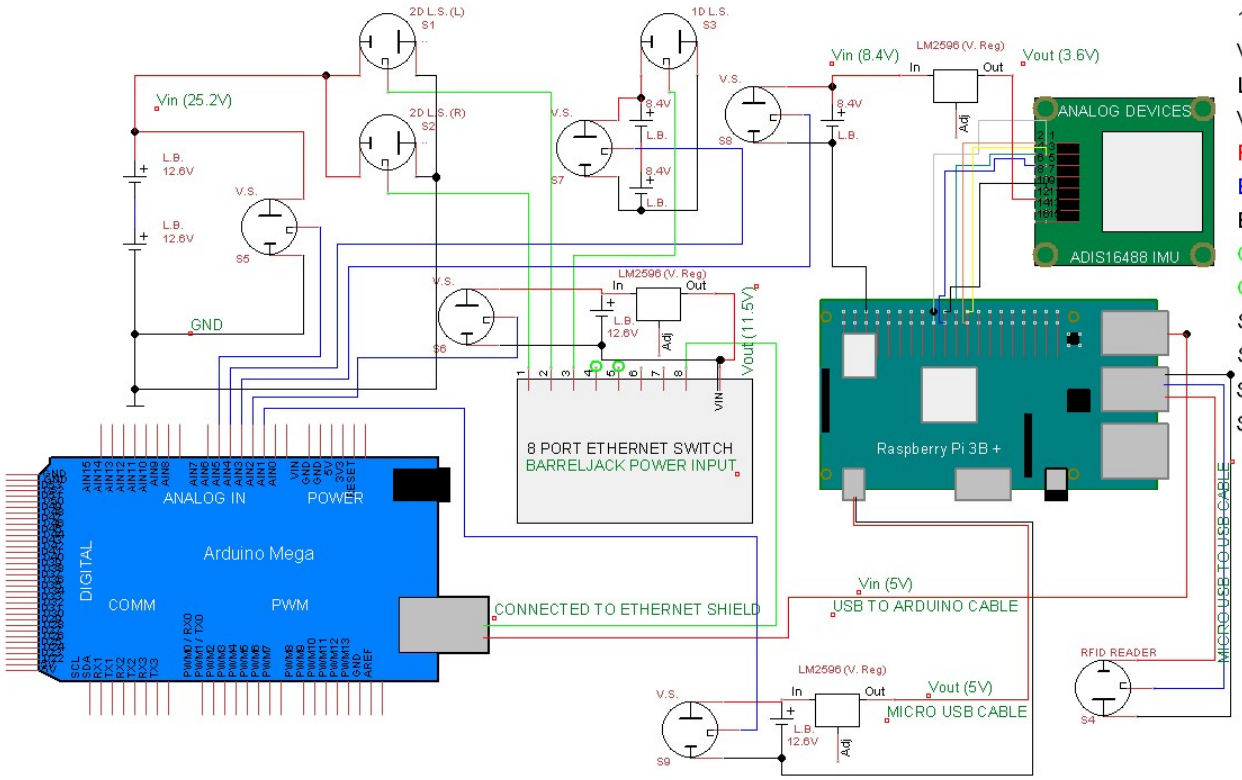

*CONNECTIONS MAY NOT BE PIN BASED, HENCE MULTIPLE 'WIRES' MAY CONNECT TO A SINGLE CONNECTION DEPENDING ON THE CONNECTION TYPE

CONNECTIONS:

ARDUNO POWER -> RPI USB
ARDUINO PIN A1 -> RPI V.S.
ARDUINO PIN A2 -> ETHERNET SWITCH
ARDUINO PIN A3 -> ADIS16488 IMU. V,S,
ARDUINO PIN A4 -> 1D L.S. V.S.
ARDUNO PIN A5 -> 2.D. L.S. (L)/(R)
I.M.U. PIN 1 -> RPI PIN 18
I.M.U. PIN 2 -> RPI PIN 24
I.M.U. PIN 3 -> RPI PIN 23
I.M.U. PIN 4 -> RPI PIN 21
I.M.U. PIN 6 -> RPI PIN 5
I.M.U. PIN 7 -> RPI PIN 24
I.M.U. PIN 9 -> RPI PIN 19
I.M.U. PIN 12 -> 3.6V VOUT

Title: ORCA CORE CIRCUIT LAYOUT		
Author: CHIN JOO ERN		
File: .Users\joo ... ORCA CORE CIRCUIT LAYOUT.dsn		Document
Revision: 1.0	Date: 6/17/2018	Sheets: 1 of 1

ORCA LASER RAIL PROFILE TROLLEY OPERATION MANUAL

INSTRUCTIONS ON HOW TO OPERATE THE ORCA TROLLEY

AUTHORS: CHIN JOO ERN, KEVIN TAN, ERIC TEO, NICHOLAS NG, LAM TENG FOONG & TOH WEI QI

RAILORDS

RAILORDS | 8th July 2018

Table of Contents

5. Purpose 2

6. Scope 2

7. Venue/Location 2

8. Duration 2

5. Definitions 3

6. Abbreviations 4

7. Responsibilities 4

8. Qualifications 4

9. Tools, Equipment, Vehicles & PPE 4

10. Hazardous Material 4

11. Risk Assessment & Safety Measures 4

12. Permit to Work 5

13. Procedure 5

13.1 Assembly of Trolley 5

13.2 Initializing the Trolley 8

13.3 Measurement Run 8

13.4 Measurement File Extraction 11

13.5 Terminating the Measurement Run 12

13.6 Post Work Maintenance 12

14. Wet Weather and Emergencies 13

15. References 13

16. Review of Document 13

16) PURPOSE

The purpose of this activity is to use the collect rail wear and track geometry measurement data with a laser rail profile measurement trolley.

17) SCOPE

To provide users with comprehensive instructions for the transportation, assembly and operation of the Orca laser rail profile trolley. These include:

f) Transportation of Trolley
g) Assembly of Trolley
h) Initializing the Trolley
i) Measurement Run
j) Measurement File Extraction
k) Disassembly of Trolley

Exact technical specifications of the Orca can be found in the **Annex A** - *Orca Technical Specifications and Datasheet.*

18) VENUE/LOCATION

All mainline and depot tracks excluding turnout segments of track.

19) DURATION

a) Transportation of Trolley to Station Platform – 5 minutes
b) Assembly of Trolley – 3 minutes
c) Initializing the Trolley – 1 minute
d) Measurement Run - < 240 minutes
e) Measurement File Extraction – 1 minute
f) Disassembly of Trolley – 3 minutes

20) DEFINITIONS

ORCA (DEPLOYED)

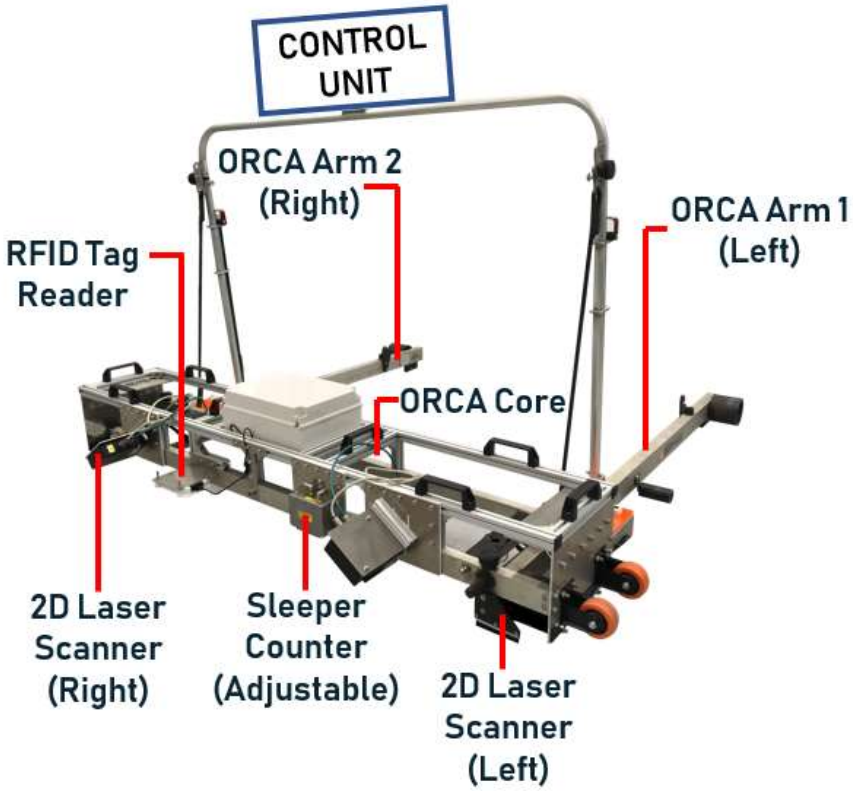

Dimensions (Length x Width x Height): 1825 x 1825 x 1140mm

ORCA (COMPRESSED)

Dimensions (Length x Width x Height): 1825 x 470 x 350mm

21) ABBREVIATIONS

d) AE – Assistant Engineer
e) TO – Technical Officer
f) TOA – Track Occupation Authorization
g) OMI – Orca Measurement Interface

22) RESPONSIBILITIES

c) AE/s – Deploy staff and coordinate work to be carried out
d) AE/s & TO/s – Perform tasks as outlined in this document

23) QUALIFICATIONS

Class 2M Lasers being used, training not required.

24) TOOLS, EQUIPMENT, VEHICLES & PPE

m) ORCA Laser Rail Profile Trolley Frame
n) Control Unit
o) 2D Laser Scanner (Right)
p) 2D Laser Scanner (Left)
q) High Visibility Vest

r) Safety Shoes

25) HAZARDOUS MATERIAL

N.A.

26) RISK ASSESSMENT & SAFETY MEASURES

Please refer to Risk Assessment document WIRaTK50

Staff shall comply with the relevant sections of the SMRT Operating Procedures – Access to Tracks and Work in Stations and Work Safety Manual.

Ensure that TOA is approved and traction power is turned off before accessing tracks.

Do not look directly at the laser beams.

In the event of system failure, do not open the electronics box to carry out maintenance during operations.

27) PERMIT TO WORK

TOA

28) PROCEDURE

13.1)

Assembly of Trolley

Flip the Orca, then unhook the securing strap and disassemble the Orca into the Core, Arm 1 and Arm 2 (Figure 1). Align Arm 1 and Arm 2 with the breadth of the Core.

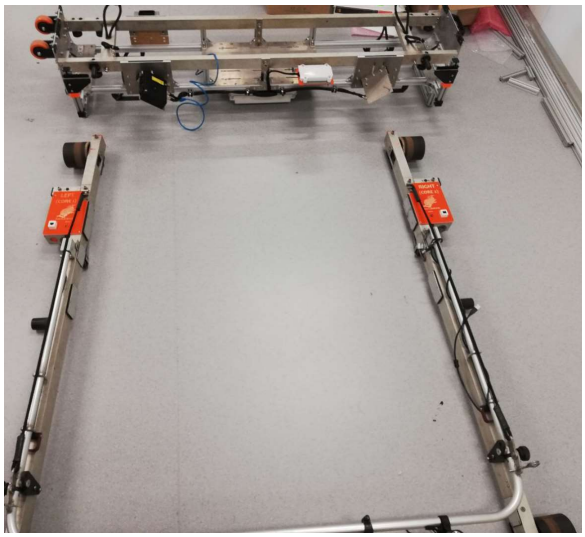

FIGURE 157 ORCA CORE FLIPPED, ORCA ARM 1 AND ARM 2 ARE ALIGNED TO THE BREADTH OF THE TROLLEY. THIS MAKES IT EASIER TO PUT THE CORE ONTO THE ARMS.

Flip the Orca Core and slowly lower the Core onto both Arm 1 and Arm 2. Secure in place with the three plastic hand knobs on each of the Arms (Figure 2).

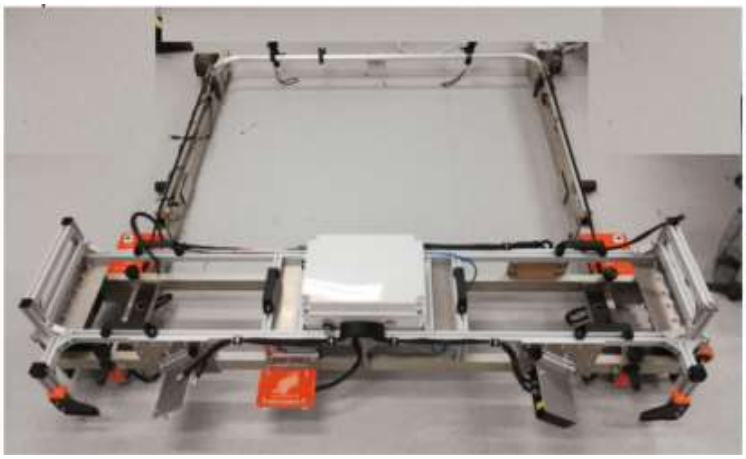

FIGURE 158. SECURE THE CORE ONTO BOTH ARMS AND PLACE THE ORCA ONTO THE TRACKS BEFORE UNLOCKING THE HANDLE BAR. THIS WILL MAKE THE SET-UP EASIER TO CARRY.

Remove the 2D Laser Scanners from the laser briefcase and remove the nuts from the bolts attached to the 2D Laser Scanner mounting plates (Figure 3). Align the holes of the 2D Laser Scanner with the mounting holes of the 2D Laser Scanner mounting plates after placing it beneath the mounting plate (Figure 4)

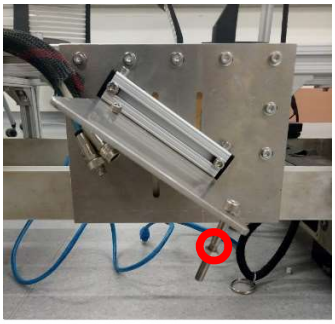

FIGURE 160. THE NUTS CAN BE FOUND ON THE BOLT SECURED TO THE

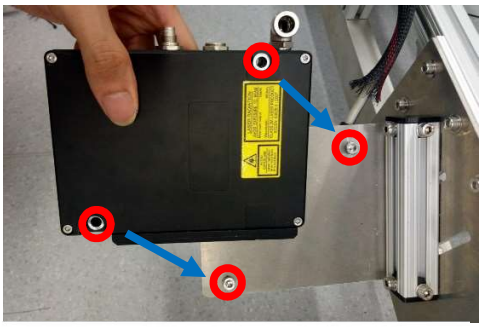

FIGURE 159. ALIGN THE SENSOR'S BOLT HOLES UNDER THE MOUNTING PLATE'S BOLT HOLES.

Insert both bolts through the 2D Laser Scanner and press the 2D Laser Scanner against the mounting plates. The threaded segment of the bolts should appear on the opposite side of the mounting plates. Holding the bolts and 2D Laser Scanner in place, slowly hand tighten the nuts one at a time. Once the nuts cannot be tightened further, remove your hand and tighten with torque wrench or pliers until a slight resistance is felt (Figure 5).

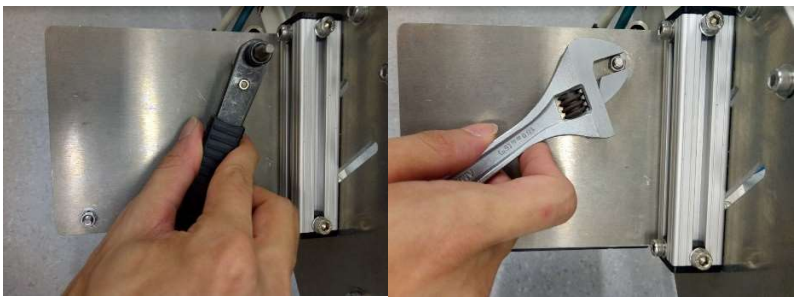

FIGURE 161. TIGHTEN NUTS UNTIL SLIGHT RESISTANCE IS FELT. DO NOT TIGHTEN THE NUTS TOO MUCH OR IT WILL DAMAGE THE LASER SCANNERS.

Next, check the headers of the cables (Figure 6) before installing them into each of the mounted 2D Laser Scanner's ports. This is extremely important as inserting the cables in the wrong orientation will cause permanent damage to both the cable heads and the insertion slots. Do this for both the left and right 2D Laser Scanners.

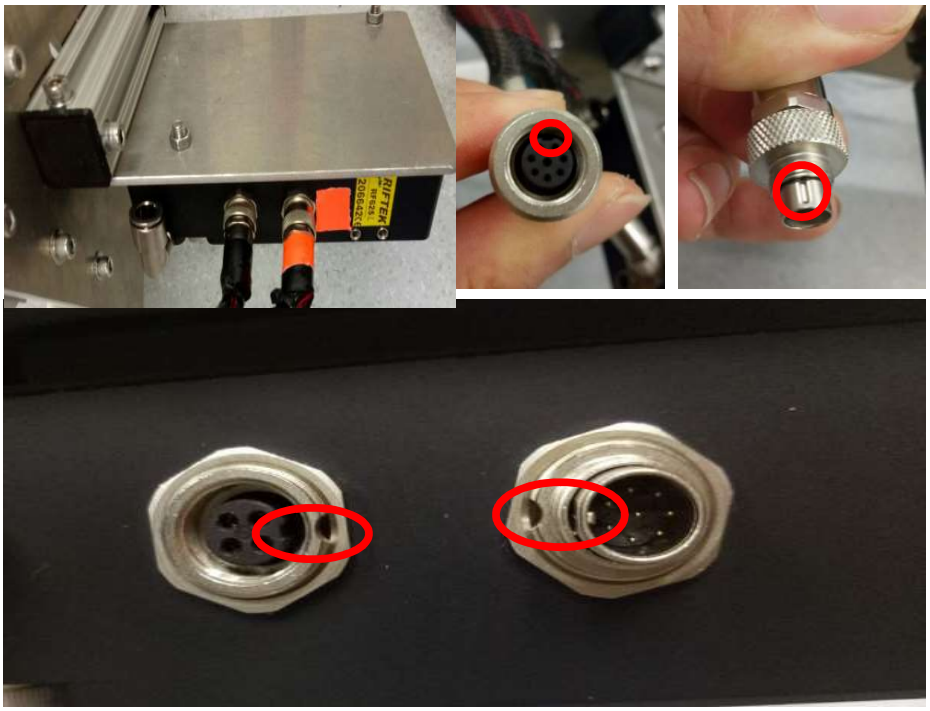

FIGURE 162. THERE ARE VARIOUS MARKERS ALONG THE HEADERS AND INPUT PORTS THAT ALLOW FOR CORRECT INSERTION OF THE CABLES. ADDITIONALLY, THE CABLES HAVE BEEN COLOR CODED.FOR EASY IDENTIFICATION.

Lift the Orca by the handles located along the Orca Core and place it on the track between the start station's head and tail. Flip the safety locks and remove the clips on each side of the Orca to release the handle mounts (Figure 7). Remove the handle from the Orca Core and place it on the handle mounts. Attach control unit to the handle. The Orca is now fully assembled.

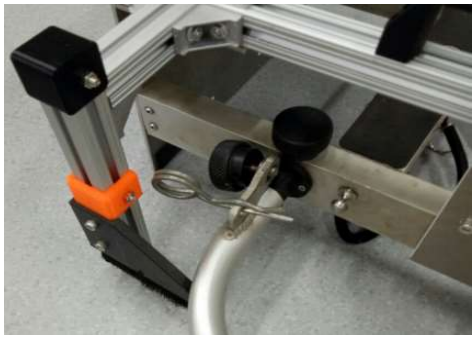

FIGURE 163. THE ORCA'S HANDLE MOUNTING POINT AT THE FRONT OF THE ORCA

13.2) Initializing the Trolley

After the trolley is assembled. Turn on the track geometry sensors by pressing the stainless-steel switch located at the front of the Orca Core. The switch will light up (Figure 8) once it is pressed indicating that the system is powered on.

FIGURE 164. SWITCH LIGHTS UP ORANGE TO INDICATE SYSTEM IS ON, WHEN THE SYSTEM IS OFF, THERE WILL BE NO LIGHTS.

To turn on the laser sensors on the Orca, turn the laser power switch located on the front of the Orca Core by flipping it from the 2 o'clock to 10 o'clock position (Figure 9). This will cause the Sleeper Counter laser to turn on immediately, the 2D Laser Scanners will require 15 seconds for boot-up, and will light up once the boot-up is complete. During this delay, connect to the Orca Wi-Fi using the control unit.

FIGURE 165. LASER SWITCH IN ITS OFFLINE AND ONLINE POSITION.

13.3)

<u>Measurement Run</u>

Before starting the measurement run, ensure that the Orca is within the bounds of the head and tail of the start station. Using the Control Unit, check that the Orca is connected to the Orca Wi-Fi network (this can be accessed through the Network and Internet Settings panel on the Control Unit). Launch the Orca Measurement Interface (OMI) by double-clicking the shortcut (blue whale icon) on the Desktop of the Control Unit. The user interface will enter a loading page and notify the user once the sensor checks and Wi-Fi connection is successful. In the even the Wi-Fi connection fails, check if the Wi-Fi is enabled on the Control Unit by accessing the Network and Internet Settings panel,

then launch the OMI again. Upon successful loading, the user will enter the menu page (Figure 10)

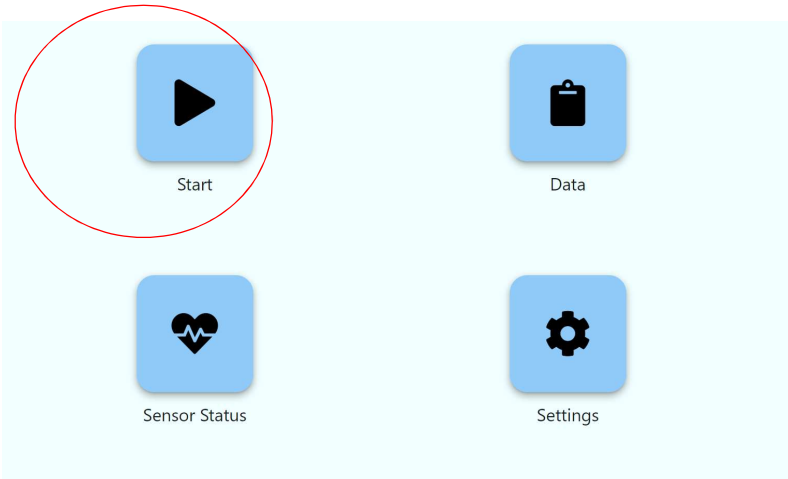

FIGURE 166. MENU PAGE

Once the interface's loading has been completed successfully, the user will be prompted to key in some basic details about the operation such as the starting location and name of operator. The "Lines" field must be filled in first; lines dictate the direction and location which the operation is performed. Keying in the information allows the basic information of the data collected to be tracked. The user may then proceed to push the trolley out of the start station bounds (Figure 11).

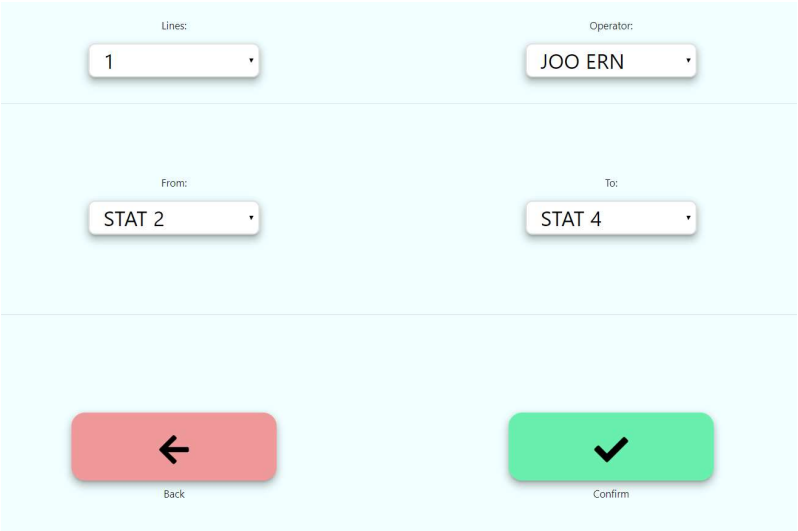

FIGURE 167. INITIALIZATION FORM

Once the Orca crosses the RFID tag marking the start or end of a station, the control unit will notify the user that a station bound has been crossed and update the station name, date and time on the left columns (Figure 12). At this point, the measurement run has begun taking measurements on the planned route. Limit the trolley speed to 2.5km/h to ensure data is captured accurately at all points in time.

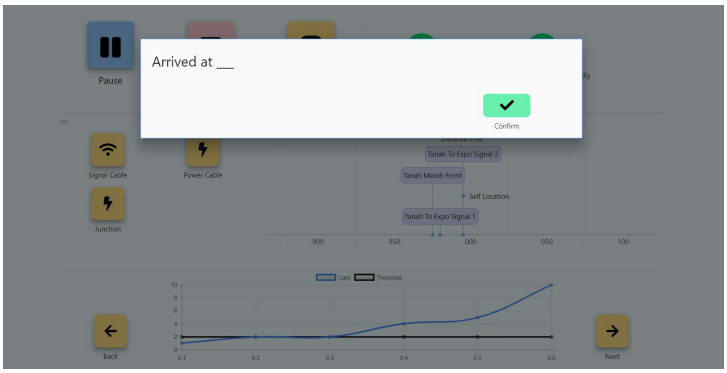

FIGURE 168. NOTIFICATION OF ARRIVAL AT STATION BOUND

At any point during the run, the user may key in notes to be tagged to specific chainages, or use shortcuts to tag a pre-saved note to a specific chainage. The user is also required to pay attention to the battery levels of the Orca, the power systems for the lasers and track geometry sensors are separate and are represented by “Laser Power Level” and “Arms Power Level” indicators at the top right of the user interface, if the Power Levels

go below 10% the user interface will prompt the user to terminate the measurement run. Terminating a measurement run will save the data collected. In the event the measurement run terminates unexpectedly, the data up till the point of termination will still be stored and can be retrieved from the Control Unit. The user should first select the date and start time of the operation desired then press the export button to convert the file to the CSV format. The file can be found in a Desktop folder (Figure 15).

In the event the OMI notifies the user that a sensor has failed (Figure 13-14), the user must stop pushing the trolley immediately and re-initialize the Orca by turning off the switches and beginning from *13.2) Initializing the Trolley*.

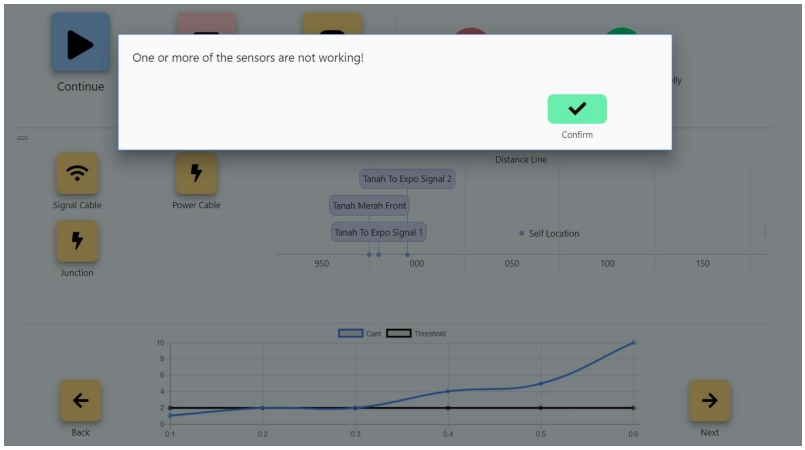

FIGURE 169. NOTIFICATION FOR SENSOR MALFUNCTION

FIGURE 170. OPERATION AUTOMATICALLY PAUSED. RED CIRCLE REPRESENTS MALFUNCTION, GREEN CIRCLE FOR NO MALFUNCTION.

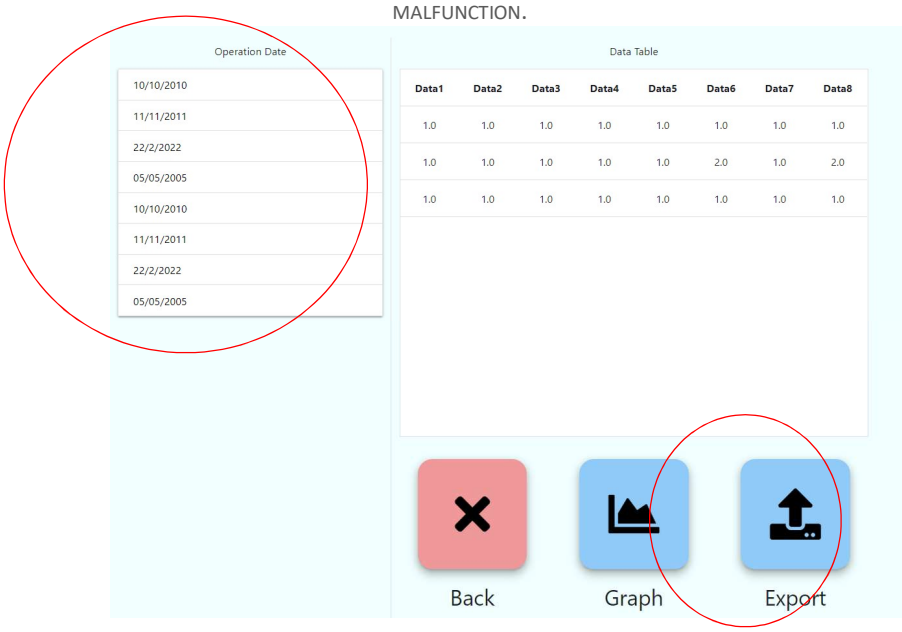

FIGURE 171. EXPORT DATA USING THIS BUTTON

Measurement File Extraction

13.4) To view the saved measurement files, go to the Desktop of the Control Unit and select the file which contains the start station, date and time of the measurement.

Transfer the file to any portable data storage device by inserting the portable storage device to any of the Control Unit's USB ports. Alternatively, if the Orca is connected to Wi-Fi with internet access, it is possible to upload the data to any shared data storage platform for immediate analysis.

Terminating the Measurement Run

13.5) Upon extraction of the measurement files, the measurement run is ready to be concluded. First, power down the system by turning off the Control Unit and switches (both the key switch and the button). Then disconnect the 2D Laser Scanners from the Orca and remove them from their mounting plate before storing them into the laser briefcase. Secure the bolt and nut onto the mounting plate so that they can be used in the next run.

Remove the handle bar and lock the handle bar arms back in place. Unscrew the 6 bolts that connect the Core to the Arms and flip the Core before placing the Arms bank into the Core. Secure the Arms to the core using the 4 straps and key rings. Secure the handle bar back onto the two black cylinders and clip them in place using the metal clips. The entire Orca should be stored as a single unit (Figure 16).

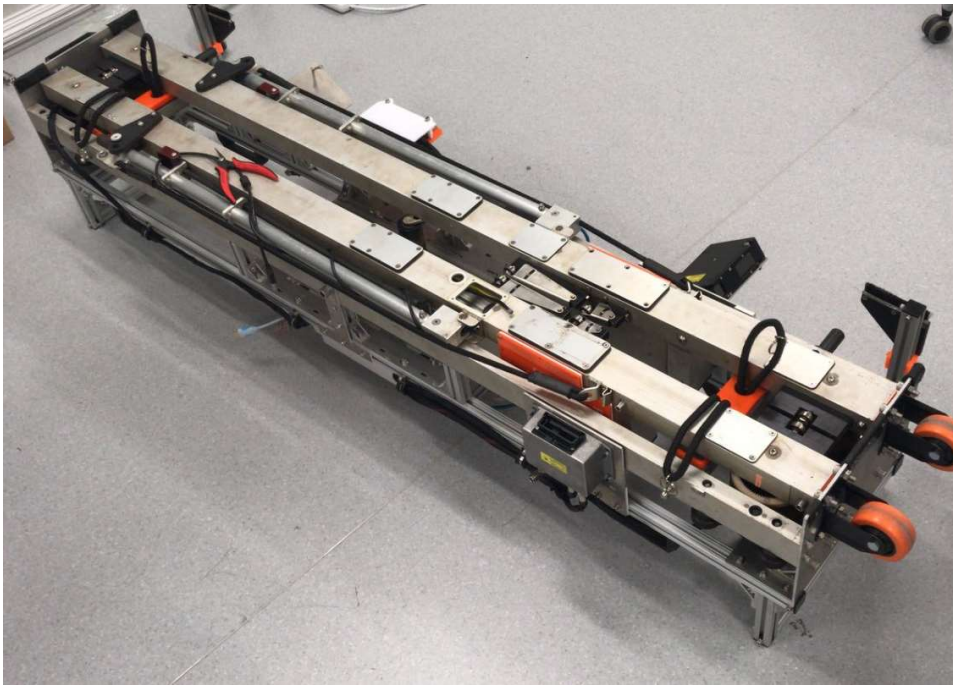

13.6)

FIGURE 172. ORCA STORED AS A SINGLE UNIT. NOTE THAT THE 2D LASER SCANNER SHOULD HAVE BEEN REMOVED BEFORE PACKING THE ORCA.

Once the Orca has been is back in its compacted form, it can be flipped once again to allow the wheels to contact the ground. This will allow the Orca to be pulled/pushed back to the transport vehicle.

Post Work Maintenance

Before storing the Orca back in the storeroom, it is critical to check that all components on the Orca are undamaged. Most importantly, check the wheels of the Orca to make sure that there is no dirt and grime build-up on the wheels. Accumulation of such material will cause the encoders on the Orca to stop functioning properly.

Lastly, remember to charge the batteries on the Orca before the next job. There are three battery charging plugs which can be accessed from outside the electronics box and each one needs to be plugged into a separate charger (Figure 17). The charging time is approximately 5 hours.

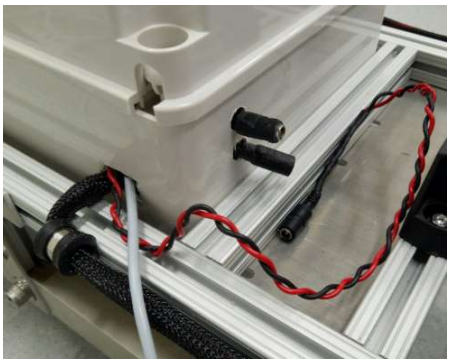

FIGURE 173. THE ORCA'S THREE CHARGING POINTS, CIRCLED IN RED.

29) WET WEATHER & EMERGENCIES

On viaducts:

a) If there is lightning risk, stop all activities and move to shelter.
b) Staff shall comply with the relevant sections of the SMRT Operating Procedures – Access to tracks and work in stations. (Access to At-Grade and/or elevated track when there is lightning risk).

During haze periods, consult PWY/PI/ADM/AD02 for precautionary measures to be taken.

30) REFERENCES

iv) Orca Technical Specifications and Datasheet

31) REVIEW OF DOCUMENT

Document to be reviewed within first 3 months of the first issue.

Annex A

Orca Technical Specifications and Datasheet

ORCA PERFORMANCE SPECIFICATIONS COMPARISON				
CHARACTERISTICS	ORCA	GRAW	CONSTRAINTS	COMMENTS
INTERVAL OF MEASUREMENTS	≥ 0.1M	0.25/0.5M	MOVEMENT AT 2.5M/S	DATA SENDING PERIOD = 40MS
OVERVIEW OF PROFILES DURING MEASUREMENTS	TO BE COMPLETED	YES	TABLET PROCESSING POWER ALGORITHM PROCESSING EFFICIENCY	
RAIL PROFILE MEASUREMENT ACCURACY (Z-AXIS)	±0.10 - ±0.35MM	±0.3MM	RF625 (Z-AXIS) 100/250 SPECIFICATIONS	GRAW MEASUREMENTS OFF BY MM IN OPERATION
RAIL PROFILE MEASUREMENT ACCURACY (X-AXIS)	±0.15 - ±0.36MM	±0.3MM	RF625 (X-AXIS) 75/180 SPECIFICATIONS	GRAW MEASUREMENTS OFF BY MM IN OPERATION
RAIL WEAR PARAMETERS ACCURACY	±0.15 - ±0.36MM	±0.3MM	RF625 100/250-75/180 SPECIFICATIONS	GRAW MEASUREMENTS OFF BY MM IN OPERATION
AUTOMATIC ASSESSMENT OF RAIL PROFILE	TO BE COMPLETED	YES	COMPLETION OF RAIL ALIGNMENT ALGORITHM	
BACKLIT DISPLAY	YES	YES	INHERENT TO TABLET	
TRASFER TO PC	USB PENDRIVE/WIFI TRANSFER/ETHERNET	USB PENDRIVE	TABLET PORTS	
GRAPHICAL REPRESENTATION	YES	YES		
TRACK GAUGE RANGE	WITH 1435MM AS BASE REFERENCE, RANGE IS FROM -30.5MM TO 94.7MM	FROM -15 TO 50MM	ABTUS CONSTRUCTION AND WABASH 971 ROTARY ENCODER RANGE ORCA ANGLE RANGE: 0-68° WITH RESPECT TO TROLLEY FORWARD DIRECTION , FLANGE LENGTH = 135MM	BASE DISTANCE BETWEEN BEAMS = 1356.5MM
GUARD RAIL GAUGE RANGE	WITH 1435MM AS BASE REFERENCE, RANGE IS FROM TO -52.5MM TO -111MM	N/A	ABTUS CONSTRUCTION AND WABASH 971 ROTARY ENCODER RANGE ORCA ANGLE RANGE: 0-75° WITH RESPECT TO TROLLEY FORWARD DIRECTION , FLANGE LENGTH = 60MM	DISTANCE FROM START OF ARM TO CENTER OF BEAM - 18.5MM (NEEDS TO BE MULTIPLED BY 2 SINCE THERE ARE 2 ARMS) ADD BEARING RADIUS 11MM
CANT RANGE	≥± 200MM	±200MM	ABTUS CONSTRUCTION AND WABASH 971 ROTARY ENCODER RANGE ORCA ANGLE RANGE: 30-60° WITH RESPECT TO TROLLEY VERTICAL FACE, FLANGE LENGTH = 135MM	
VERTICAL IRREGULARITIES RANGE		±2MM	WABASH 971 ROTARY ENCODER ACCURACY	
RAIL PROFILE	INNER RAIL PROFILE	FULL RAIL PROFILE		RAIL WEAR ON INNER SIDE IS LARGER
TRACK GAUGE ACCURACY	±0.1123MM	±0.5MM	WABASH 971 ROTARY ENCODER ACCURACY	±55*sin(0.117)
CANT ACCURACY	±2.848MM	±1.5MM	WABASH 971 ROTARY ENCODER ACCURACY	±1395*SIN(0.117/180*PI())
VERTICAL IRREGULARITIES ACCURACY	±0.1021	±0.2MM	WABASH 971 ROTARY ENCODER ACCURACY	±50*SIN(0.117/180*PI())
HORIZONTAL RAIL HEAD WEAR ACCURACY	±0.2MM	±0.3MM	RAIL ALIGNMENT ALGORITHM AND RF625 SCANNER ACCURACY	
VERTICAL RAIL HEAD ACCURACY	±0.2MM	±0.3MM	RAIL ALIGNMENT ALGORITHM AND RF625 SCANNER ACCURACY	
WEIGHT	28KG	30KG		ORCA SEPARABLE ARMS, GRAW INSEPERABLE
OPERATING CONDITIONS	FROM -20 TO 45 °C	FROM -20 TO 45 °C		
MEMORY CAPACITY	464KM	1400KM OR 2800KM	464KM	26GB MEMORY, 14KB PER READING (MAX)
CONTINUOUS OPERATIONS	6H	3H		
DATA FORMATS	PDF, MS WORD, MS EXCEL	PDF, MS WORD, MS EXCEL, DXF		
TRACK TWIST	FOLLOWS SMRT CONVENTIONS	DOES NOT FOLLOW SMRT CONVENTIONS		
[illegible]	[illegible]	[illegible]	[illegible]	USEFUL FOR DETERMINING IF THERE IS SUFFICIENT POWER TO [illegible]

Or

ORCA Mini Technical Documentation

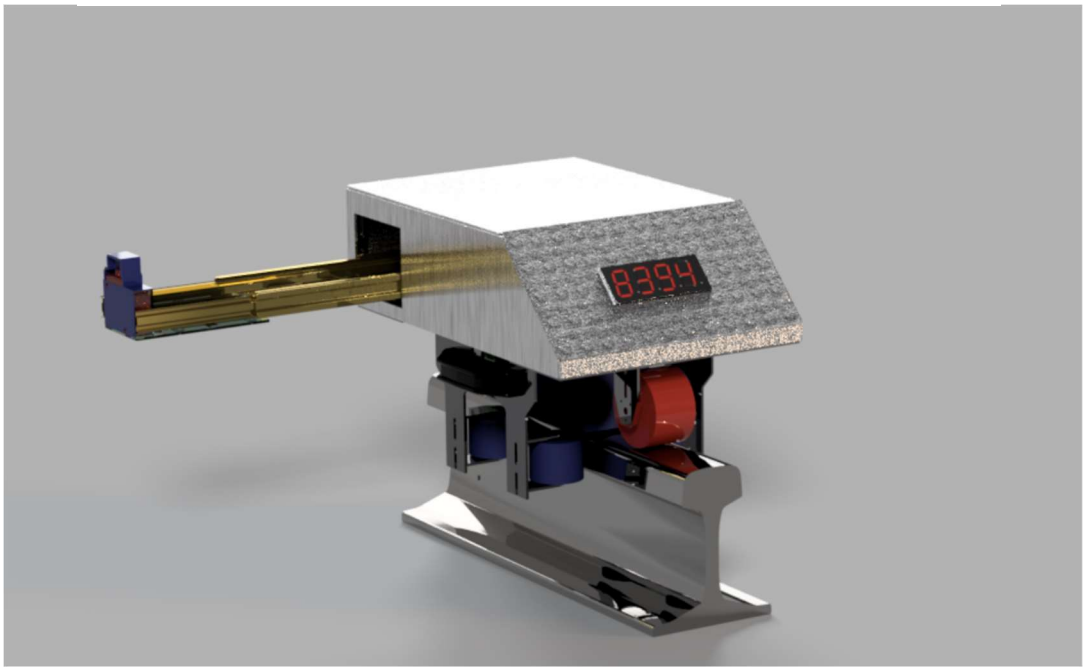

AUTHORS: CHIN JOO ERN, KEVIN TAN, ERIC TEO, NICHOLAS NG, LAM TENG FOONG & TOH WEI QI

1. Operational Deliverables

No.	Requirement	Delivered Requirement
1.	Able to track target chainage within ±1 sleeper distance	Deviation of < ± 35 cm
2.	Must be able to move at a speed of 3km/h	Can achieve speeds from 2-15km/h
3.	Must be portable	Has a weight of 8kg
4.	Minimum operational time of 4 hours	Can operate for 6 hours
5.	Chainage distance to be highly visible	Can be seen from 20m away at night
6.	Bluetooth app can work within 5m	Able to work within 15 m

2. System Architecture

The following diagrams illustrate how power is distributed and how data is processed respectively.

Power flow Diagram

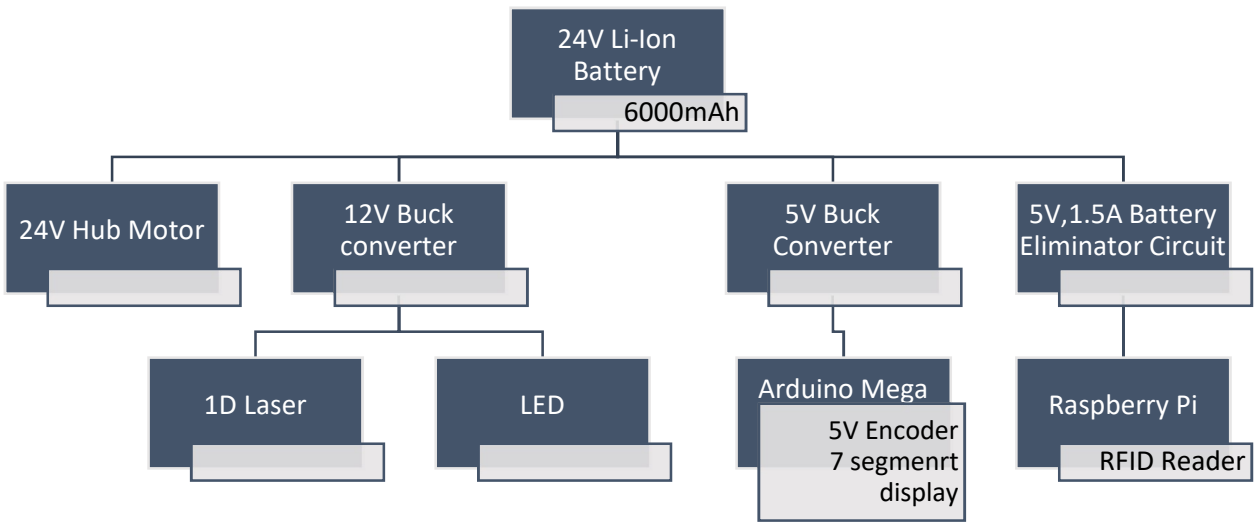

Data flow Diagram

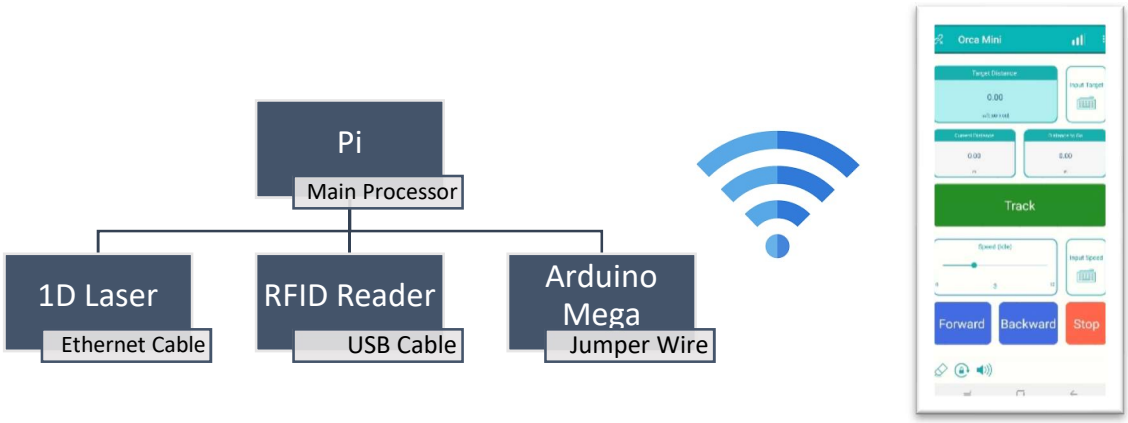

3. Orca Mini Features

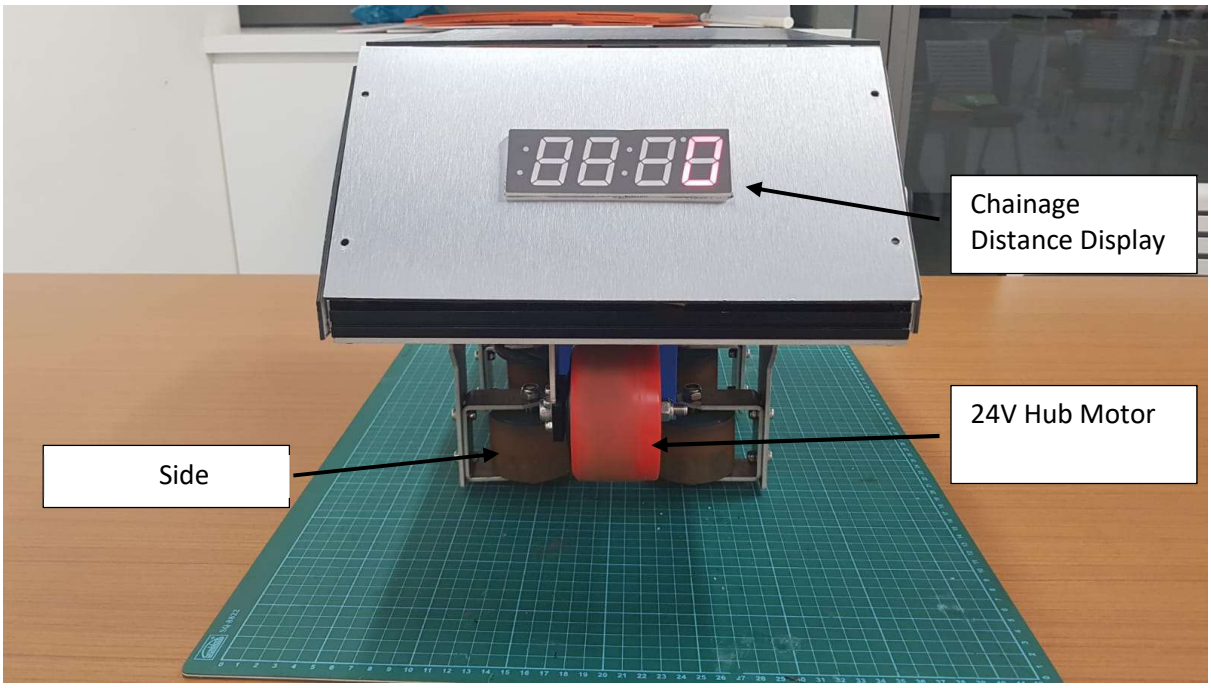

Fig 1. Front profile of ORCA mini

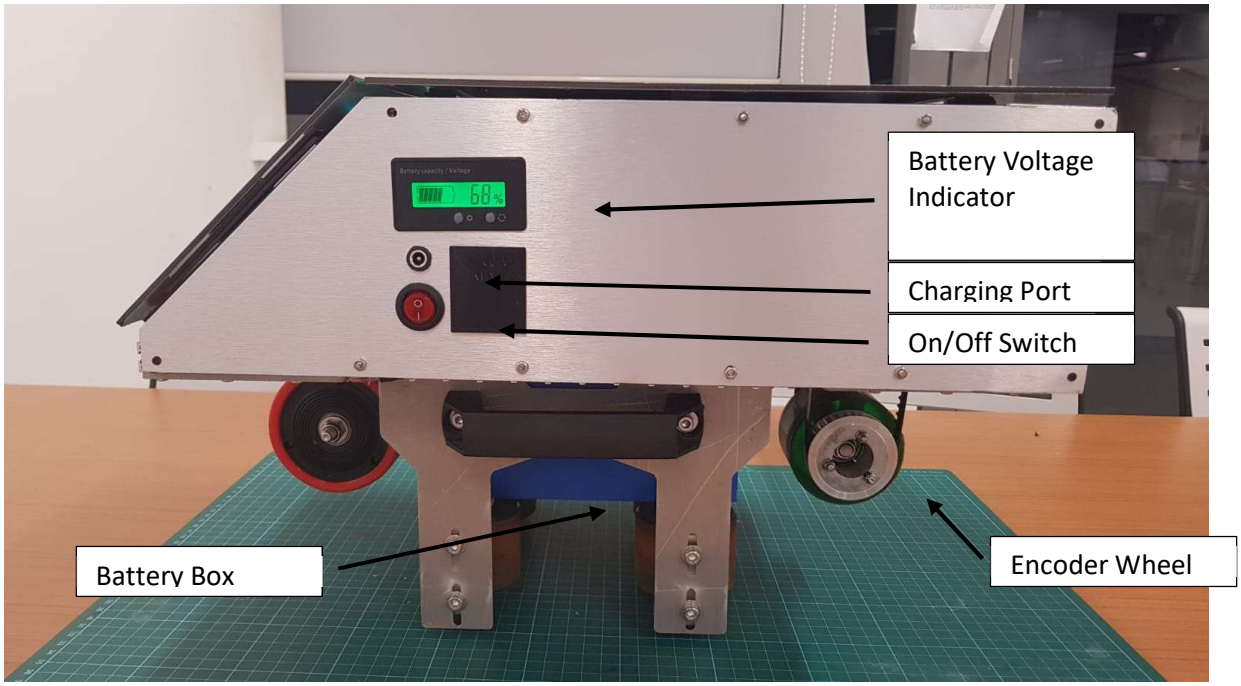

Fig 2. Left profile of ORCA mini

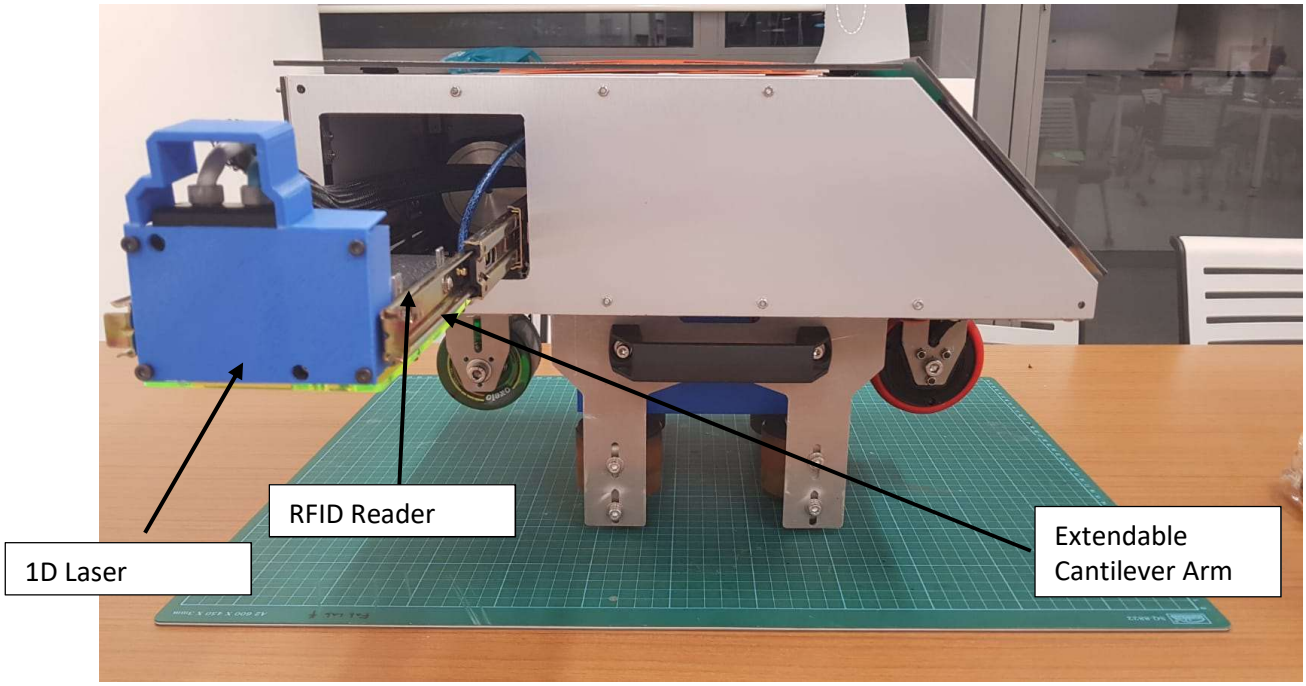

Fig 3. Right profile of ORCA mini

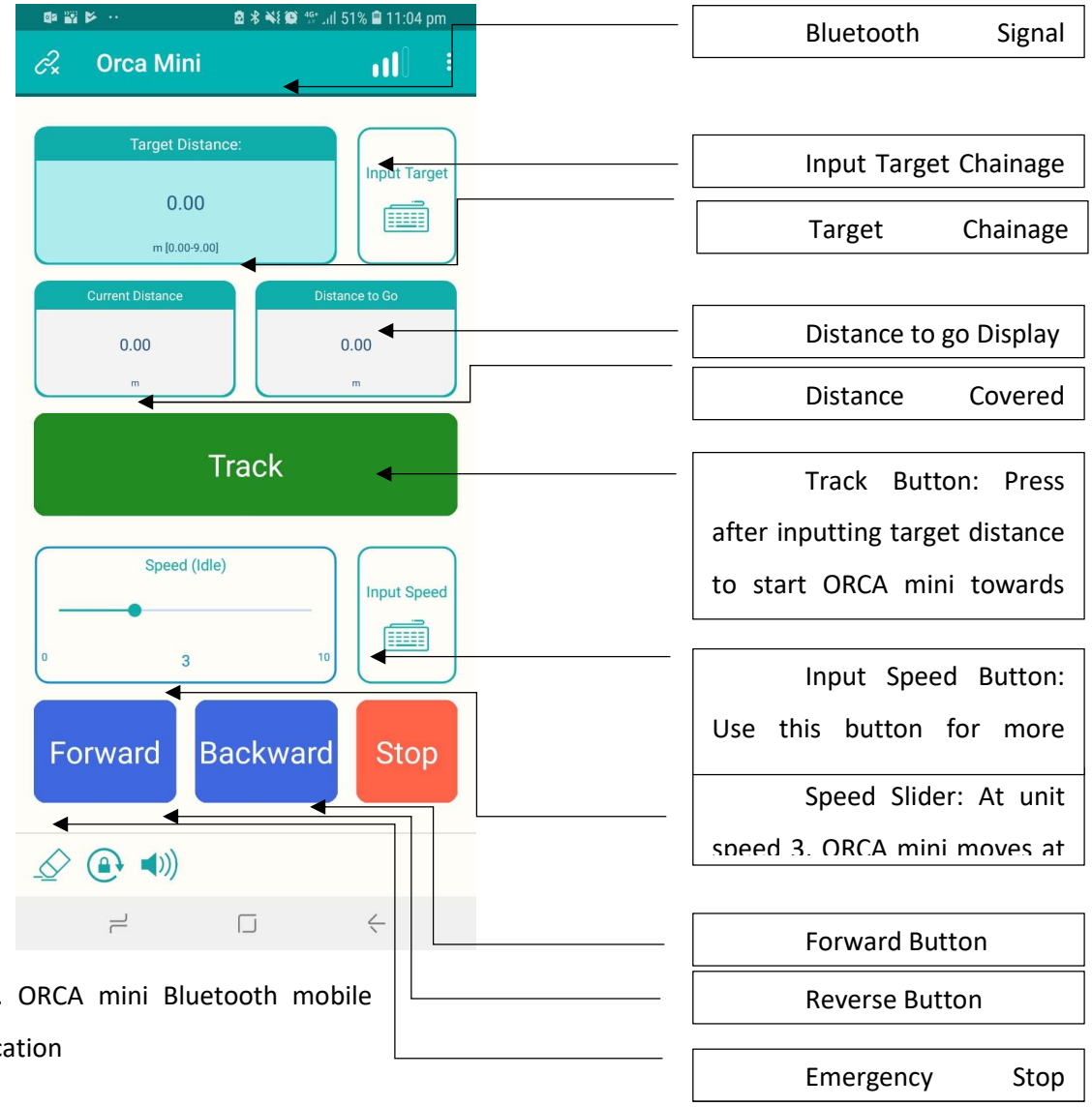

Fig 4. ORCA mini Bluetooth mobile application

4. Step by Step start up guide

Step 1:

To start using ORCA mini, first download Annikken Andee from google play store.

Step 2:

Turn it on using the On/Off switch. Ensure battery voltage is above 20.4 V before you begin operation using the battery indicator. To cycle between battery voltage percentage and actual voltage, press the bottom right button with the cycle icon. If zero is not displayed on the chainage distance indicator, restart the ORCA mini.

Fig 5. Different modes of battery indicator

Step 3:

Before initializing the app, pull apart the ORCA mini handles, position it at the centre of the rail and let the spring mechanism clamp. Next, extend the drawer by pulling it out of the chassis as demonstrated in Fig 6.

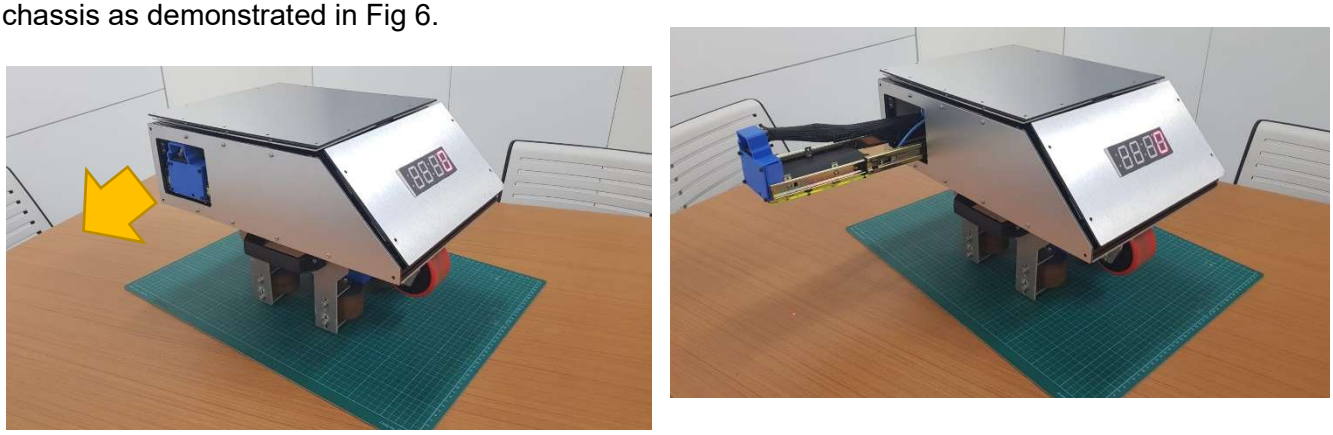

Fig 6. Extension of Cantilever Arm

Step 4:

Connect your phone to ORCA mini by starting up the app, pressing scan and then selecting ORCA mini. Bluetooth must be turned on on your phone before this can work.

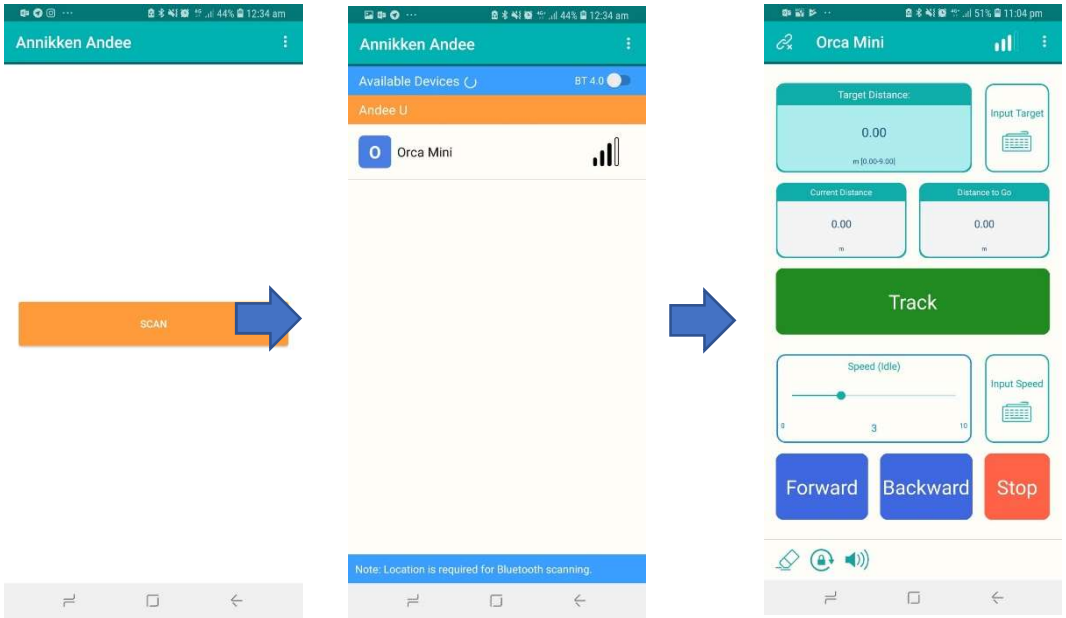

Fig 7. Process of connecting to ORCA mini using BT app

Step 5:

Key In the desired chainage using the input target button. By default the robot will move towards the target chainage at unit speed 3. Speed can be altered on the fly using the speed slider. The robot will oscillate about its target chainage until it is within ±5 cm.

Bill of Materials

S/N	Item	Part	Supplier	Quantity	Price per Piece / SGD	Total Cost / SGD
1	1D Laser Displacement Sensor	E02	Riftek	1	1660	1660
2	RFID Reader and Mount	E03	Identix	1	958.08	958.08
3	Voltage Regulator	E10	Lazada	3	0.97	2.91
4	Arduino Mega	E05	SGBOTIC	2	16.7	16.7
5	Raspberry Pi 3B	E18	Lazada	1	68	68
6.	Hengstler Encoder	E19	RS Components	1	258.62	258.62
7.	24V 6000mAh Battery	E20	AliExpress	1	56.3	56.3
8.	24V 250W Hub Motor	E21	AliExpress	1	70.5	70.5
9.	20A Multistar ESC	E22	HobbyKing	1	20.67	20.67
10.	Flipsky VESC	E23	Arcboard	1	100	100
11.	Annikken Anddee Board	E24	Amazon		107.44	107.44
12.	Battery Voltage Sensor	E25	Lazada		5.8	5.8
13	Battery Switch	E26	Continental Electronics	1	2	2
14	Adadfruit 7 segment	E27	Adafruit	1	25.52	25.52
13	Micro SD Card (32Gb)	E28	BookLink	1	22.2	22.2
14	Linear Shaft Bearings	M01	AliExpress	8	4	32
15	Skateboard Wheels(4pc)	M02	Decathalon		31.7	31.7

16	Rubber Timing Belt	M03	Shinko Bearings	1	4	4
17	P30 Alu Gear L037-6F	M04	Shinko Bearings	1	34	34
18	P40 Alu Gear L037-6F	M05	Shinko Bearings	1	44	44
19	Aluminium Composite Panels	M06	Dama	2	14.25	28.50
20	Copper Counterweight	M07	Teck Leong Metals	1	20.33	20.33
21	Drawer Extension Brackets	M08	Thye Seng Hardware	1	18.19	18.19
22	N50 Neodymium Magnets	M09	Lifton Magnets	5	5	25
23	Extension Springs	M10	Singapore Spring	1	17.52	17.52
24	8mm Linear Shafts	M11	AliExpress		42.87	42.87
25	Handles	M12	AliExpress	2	4.9	9.6
26	Stainless Steel Brackets	M13	Lida Electrical	8	2.6	20.8
27	I Shaped Base Plate	M14	Sing Hong Huat Aluminium	1	9	9
28	Side Mounting Plates	M15	Sing Hong Huat Aluminium	2	7	14
29	Side Wheel Plate	M16	Sing Hong Huat Aluminium	4	4	16
30	Hub Motor Bracket	M17	Sing Hong Huat Aluminium	1	3	3
31	Encoder Wheel Bracket	M18	Sing Hong Huat Aluminium	1	3	3
32	15mm Aluminium Extrusion	M19	AliExpress	1	43.2	43.2

33	1D Laser Encasing	M20	AliExpress	1	4.50	4.50
34	RFID Encasing	M21	AliExpress	1	3.50	3.50
35	Acrylic Mounting Plate	M22	Dama	1	3	3
36	Encoder Spacer	M23	AliExpress	1	1.50	1.50
37	Fasteners	M24	Sin Hong Hardware	1	35	35
					Grand Total	3838.95

5. Part Assemblies and Respective Drawings

The following parts must be fabricated to meet the specifications defined in the drawings **found in the ORCA mini Engineering Drawings folder attached with this document**.

6. Fabrication Processes

The recommended fabrication steps for the parts specified in the previous sections are detailed in the tables below. Bullet points specify the components required for a single sub-assembly component. Users are recommended to follow this sequence of fabrication for ease of assembly.

Sub-Assemblies:

1) Spring Latching Mechanism
   - 1 x I shaped Base Plate
   - 4 x Aluminium Extrusion
   - 8 x Linear Shaft Holder
   - 8 x Linear Shaft Bearing
   - 4 x 8mm Linear Shaft
   - 4 x Extension Springs
   - 8 x Hook Mount

Fig 3: Assembly of Spring Latching Mechanism

2) 1 x Side Clamp Assembly (2 Required)
   - 1 x Side Mounting Plate
   - 2 x Side Wheel Mount
   - 2 x Skateboard Wheels
   - 1 x Handle

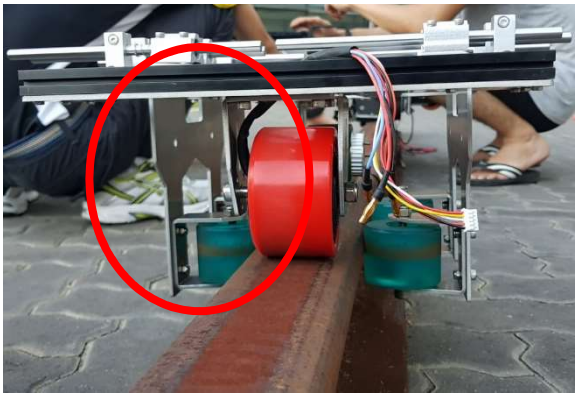

Fig 3: Assembly of Side Clamp

3) Extended Cantilever Arm Assembly
    - 1 x RFID Reader
    - 1 x RFID Reader Encasing
    - 1 x 1D Laser
    - 1 x 1D Laser Encasing
    - 1 x Acrylic Baseplate
    - 1 x 25cm Drawer Bracket

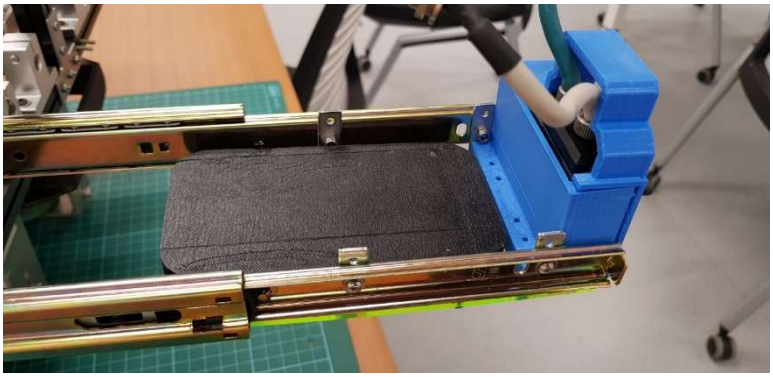

Fig 3: Assembly of Extended Cantilever Arm

4) Electronics Assembly
    - 1 x Arduino Mega
    - 1 x Raspberry Pi
    - 1 x Annikken Andee Shield
    - 1 x VESC
    - 3 x Buck Regulator
    - 1 x Acrylic Base Plate

Fig 3: Assembly Of Electronics

7.1 3D Printing of PLA Components

Op #	Part# Drawing #	Instructions and Parameters
01	M20 - M21	Export the components from Autodesk Fusion 360 to STL format.

02		Print STL files at 10% infill, 60 speed setting and 0.8mm wall thickness with the exception of the One-Piece Suspension (30% infill, 60 speed setting and 1.4mm wall thickness). Add support when necessary.
03		Using a pair of pliers, remove and support and used a file to sand any rough edges.

3.2 Laser Cut of Acrylic Components

Op #	Part# Drawing #	Instructions and Parameters
01	M22	Using 3mm green acrylic, cut out the required parts (in DXF format) at 1.8 speed, 60 power and 700ppi.

3.3 Waterjet of Aluminium Components

Op #	Part# Drawing #	Instructions and Parameters
01	M14	Water jet out require components at 60000 psi with alluvial abrasive.
02		Use a file to smoothen any sharp edges from the aluminium/aluminium-composite parts.

3.3 Waterjet of Aluminium Components with custom bending

Op #	Part# Drawing #	Instructions and Parameters

01		Water jet out require components at 60000 psi with alluvial abrasive.
02	M14	Bend Aluminium using Sheet Metal Bender.To obtain a bend of 90 degrees, slowly bend beyond by 10 degrees as the machined part will experience spring back.
02		Use a file to smoothen any sharp edges from the aluminium/aluminium-composite parts.

7. Assembly

Once all custom components in section 2 have been fabricated, the Orca mini is to be assembled according to the exploded diagrams shown below.

Overview of ORCA mini components

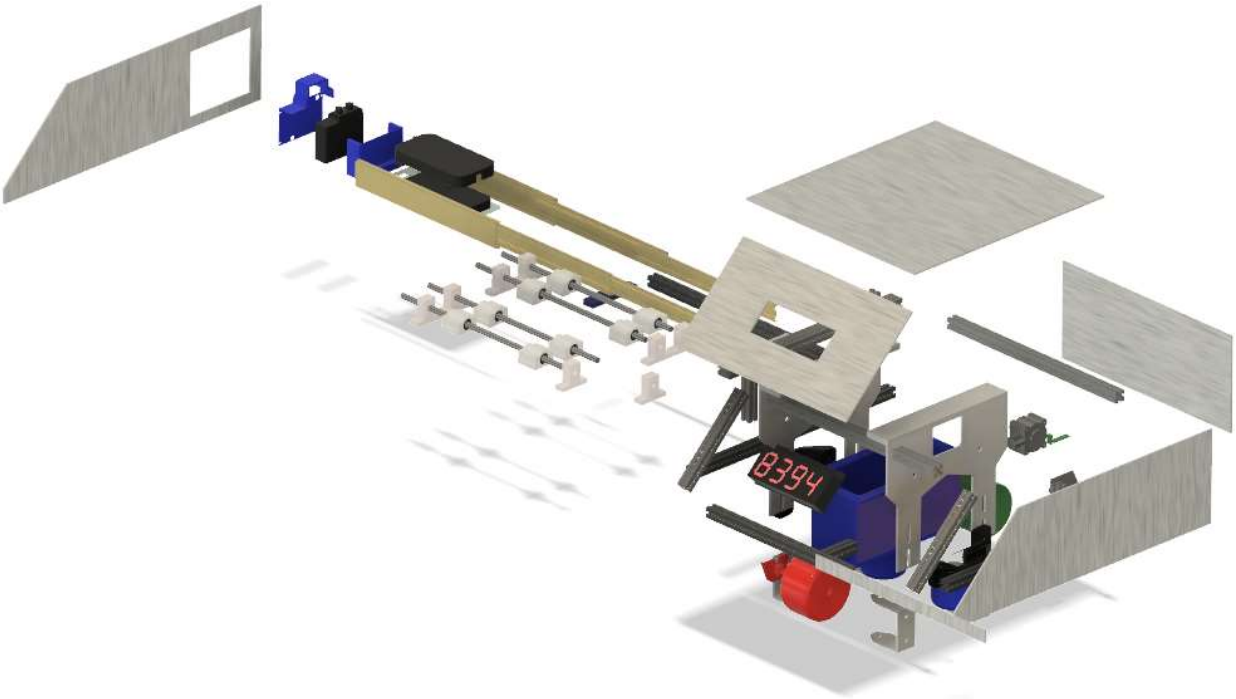

Step 1: Assemble spring latching mechanism to baseplate

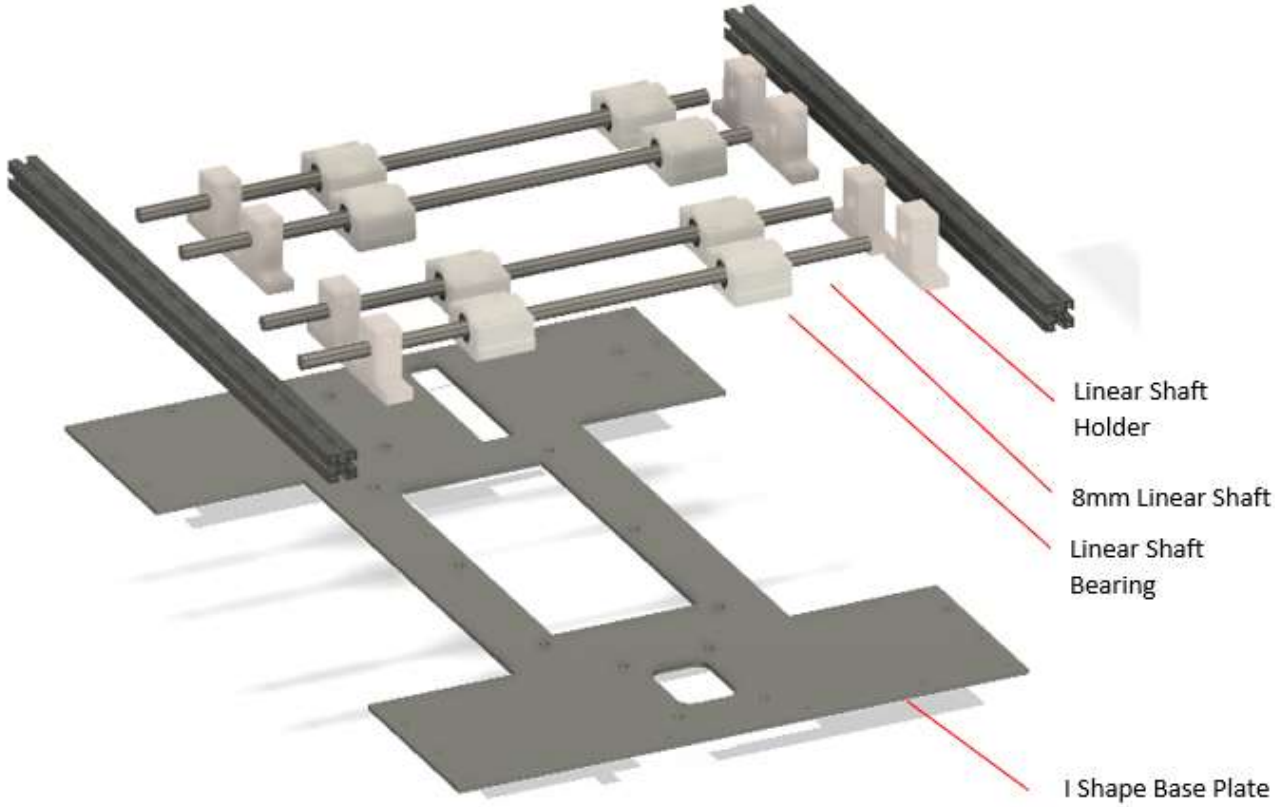

Step 2: Put together two side mount assemblies

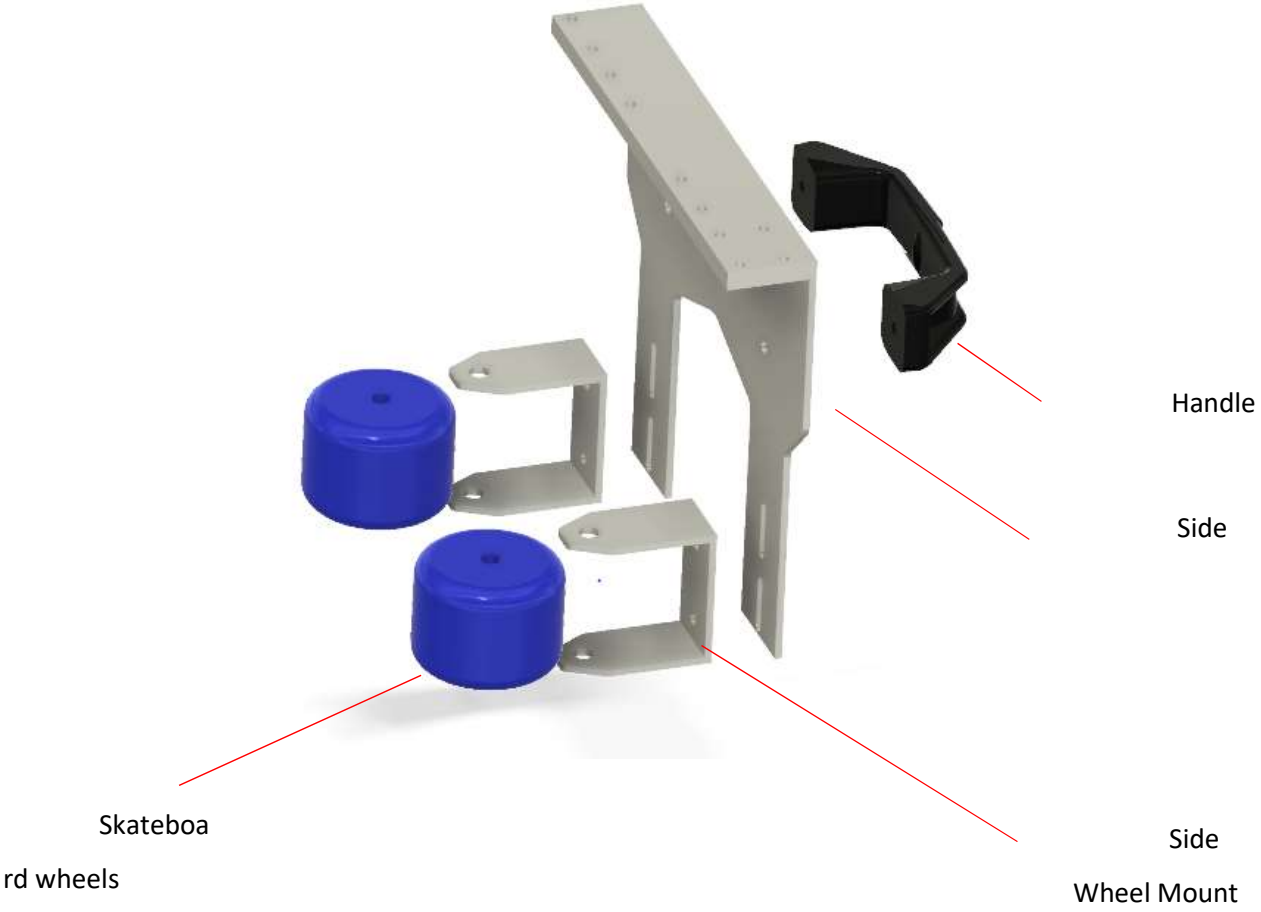

Step 3: Put together Hub Motor

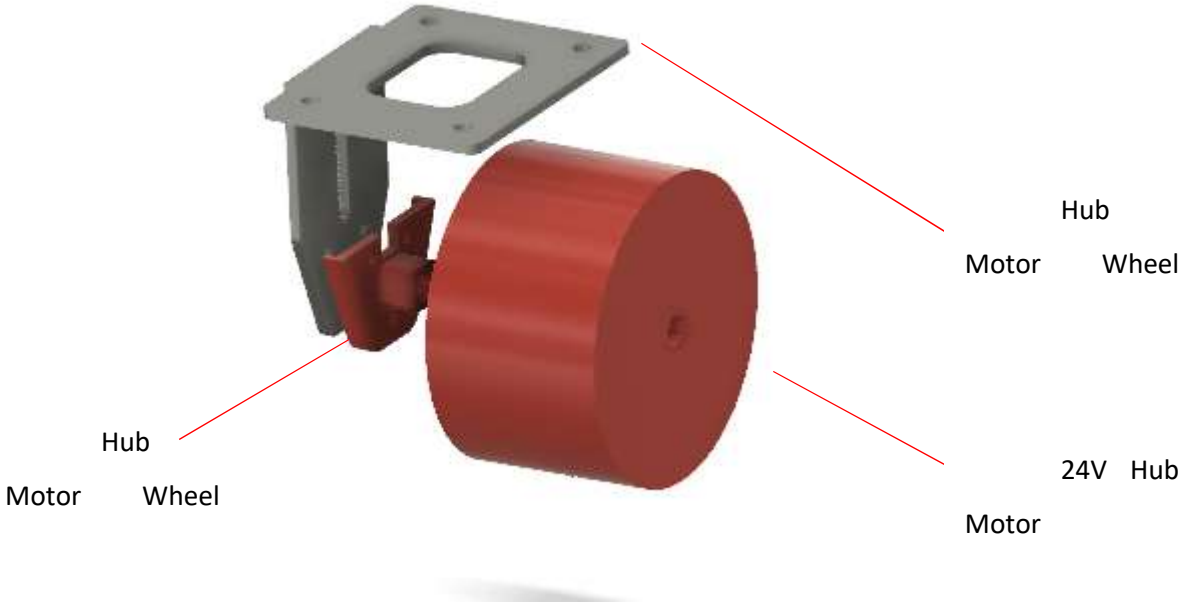

Step 5: Put together the Extended Cantilever Arm

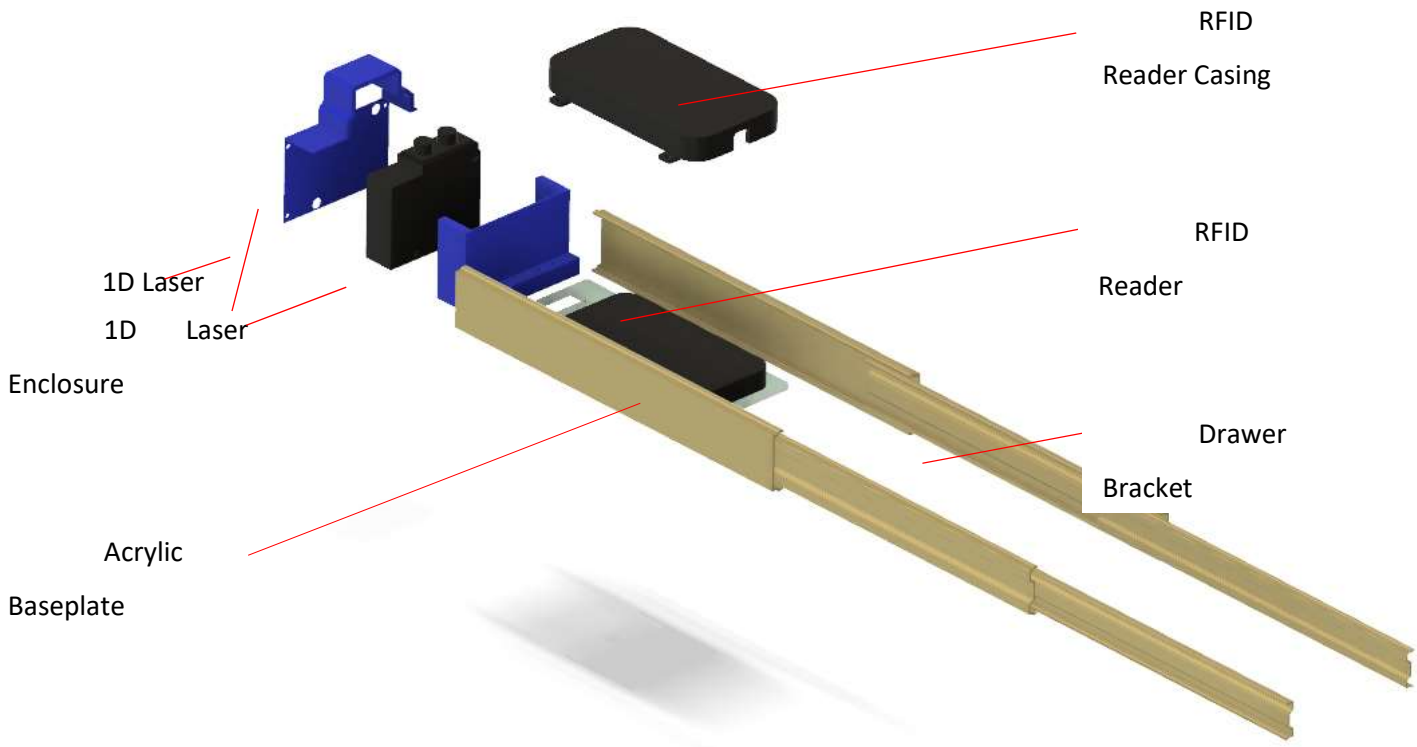

Step 5: Assemble remaining aluminium extrusions to form the chassis and mount aluminium composite panels

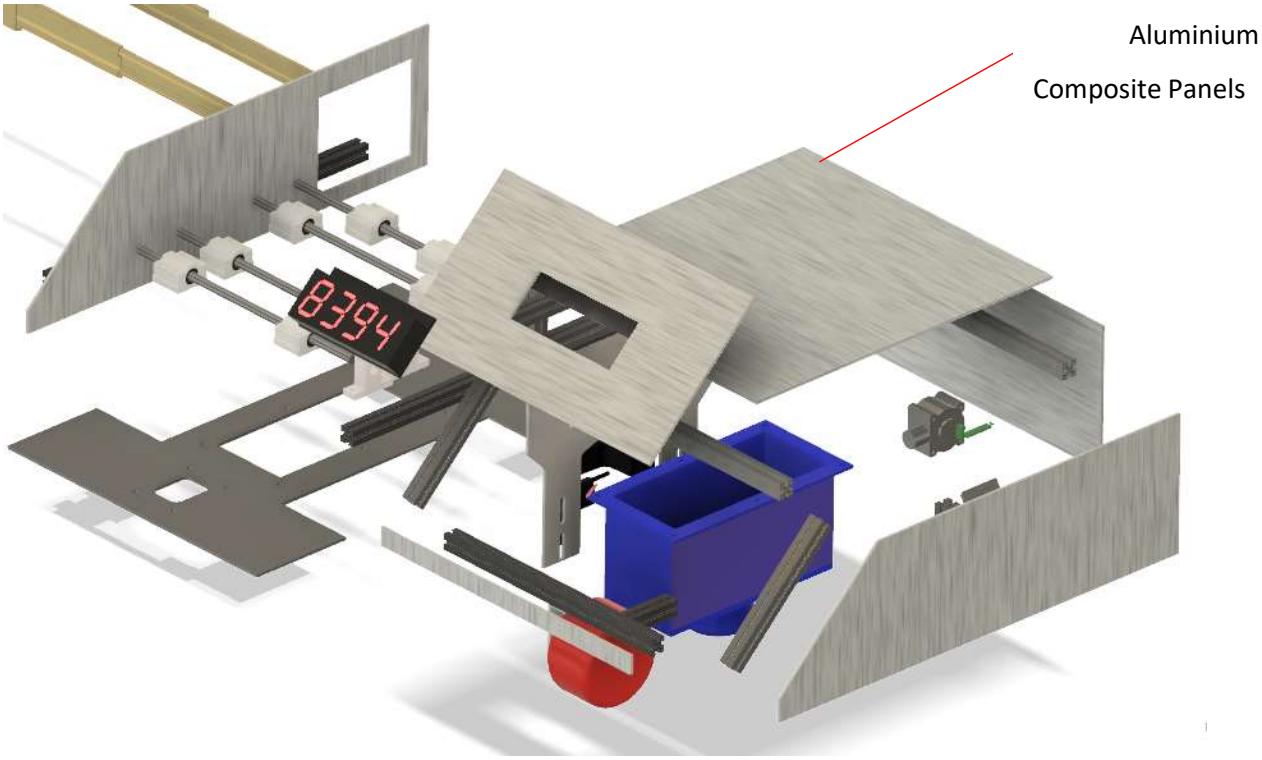

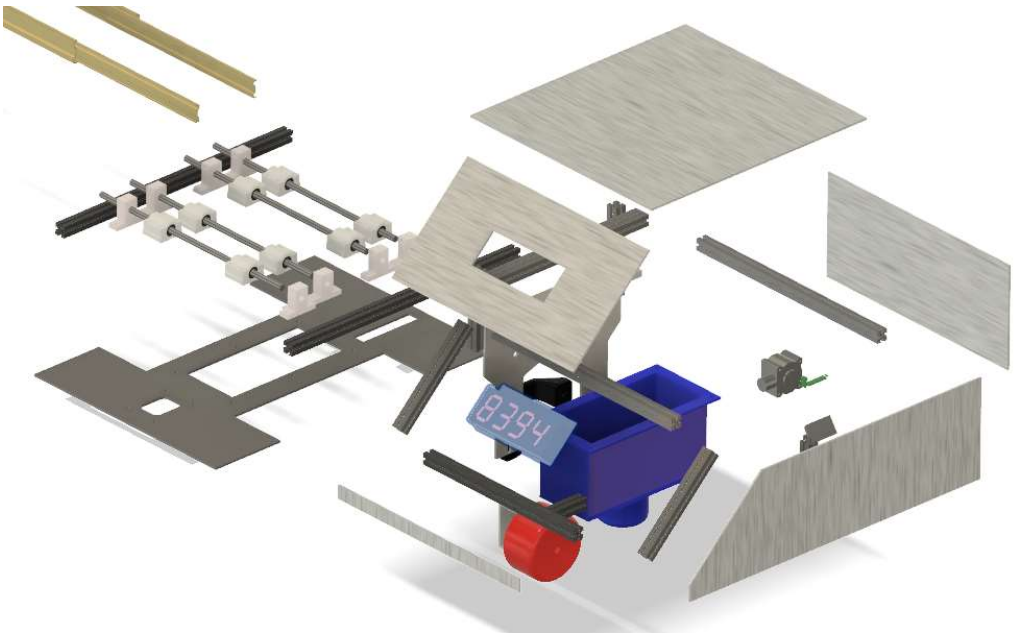

ORCA STRUCTURAL CONSTRUCTION PLANS

Rev. 1

Authors

Chin Joo Ern, Eric Teo, Kevin Tan, Lam Teng Foong, Nicholas Ng, Toh Wei Qi

3. Bill of Materials with Cost Estimation

S/N	Item	Part	Supplier	Quantity	Price per Piece / SGD	Total Cost / SGD
1	Abtus Trolley ABT4530	M01	Abtus	1	35000	35000
2	82mm 2525 Aluminum Extrusion	M02	Prestech	6	0.9	5.4
3	85mm 2525 Aluminum Extrusion	M03	Prestech	6	0.9	5.4
4	115mm 2525 Aluminium Extrusion	M04	Prestech	3	1.25	3.75
5	125mm 2525 Aluminium Extrusion	M05	Prestech	4	1.25	5
6	225mm 2525 Aluminum Extrusion	M06	Prestech	2	2.5	5
7	245mm 2525 Aluminum Extrusion	M07	Prestech	10	2.5	25
8	1680mm 2525 Aluminum Extrusion	M08	Prestech	2	16.8	33.6
9	Die Cast 2020 Corner Set	M09	Prestech	36	0.44	15.84
10	4080 Angle Bracket Set	M10	Prestech	6	6.6	39.6
11	1D Laser Mount	M11	Sing Hong Huat Aluminium	1	3	3
12	2D Laser Mount	M12	Sing Hong Huat Aluminium	2	3	6
13	2D Laser Position Plate	M13	Sing Hong Huat Aluminium	2	3	6
14	Electronics Box Plate	M14	Sing Hong Huat Aluminium	1	25	25
15	RFID Reader Bracket	M15	Sing Hong Huat Aluminium	1	3	3
16	Crossbar Middle Mount (Inner)	M16	Sing Hong Huat Aluminium	2	2	4
17	Crossbar Middle Mount (Outer)	M17	Sing Hong Huat Aluminium	2	2	4
18	L Plate (Horizontal)	M18	Sing Hong Huat Aluminium	2	5	10
19	Left L Plate (Vertical)	M19	Sing Hong Huat Aluminium	1	5	5
20	Right L Plate (Vertical)	M20	Sing Hong Huat Aluminium	1	5	5
21	1D Laser Spacer	M21	Dama Trading	2	1	2
22	2D Laser Spacer	M22	Dama Trading	4	1	4
23	Arm Electronics Cover	M23	Dama Trading	2	1	2
24	Crossbar Padding	M24	Dama Trading	6	1	6
25	Front Arm Cover	M25	Dama Trading	2	1	2
26	RFID Cover	M26	Dama Trading	1	1	1

27	Corner Cover	M27	Taobao	2	1	2
28	Sweeper Limiter	M28	Taobao	2	0.2	0.4
29	End Cap	M29	Taobao	15	0.2	3
30	RFID Reader Shield	M30	Taobao	1	1	1
31	310x230x130mm Electronic Box	M31	AliExpress	1	14	14
32	70mm Diameter Fixed Castor Wheels	M32	RS Components	2	9.23	18.46
33	Plastic Handles	M33	Lazada	7	3.3	23.1
34	2D Laser Scanner	E01	Riftek	2	7780	15560
35	1D Laser Displacement Sensor	E02	Riftek	1	1660	1660
36	RFID Reader and Mount	E03	Identix	1	958.08	958.08
37	Ethernet Switch	E04	NetGear	1	67	67
38	Arduino Mega	E05	SGBOTIC	2	16.7	33.4
39	Arduino Ethernet Shields	E06	SEED Studio	2	33.5	67
40	Ethernet Cables	E07	AliExpress	2	1.14	2.28
41	Stainless Steel Push Button	E08	AliExpress	1	4.17	4.17
42	Key Switch	E09	AliExpress	1	17.1	17.1
43	Voltage Regulator	E10	Lazada	4	0.97	3.88
44	Voltage Sensor	E11	Lazada	2	0.5	1
45	Cable Terminals	E12	AliExpress	14	0.1	1.4
46	Cable Insulation Sleeves	E13	AliExpress	1	3.67	3.67
47	Ethernet Adapter	E14	AliExpress	4	1.7	6.8
48	Short Ethernet Cable	E15	AliExpress	4	3.1	12.4
49	Cable Clamps	E16	AliExpress	8	0.53	4.24
50	Li-ion Batteries	E17	AliExpress	3	35	105
51	Raspberry Pi 3B	E18	Lazada	1	68	68
52	SD Card 32GB	E19	BOOKLINK	1	16.9	16.9
53	Fireproof Bag	E20	Lazada	1	13.9	13.9
54	Heat Sinks	E21	AliExpress	7	1.3	9.1
55	USB Head	E22	AliExpress	1	0.52	0.52

					Grand Total	53904.39

4. Part Assemblies and Respective Drawings

The following parts must be fabricated to meet the specifications defined in the drawings found below.

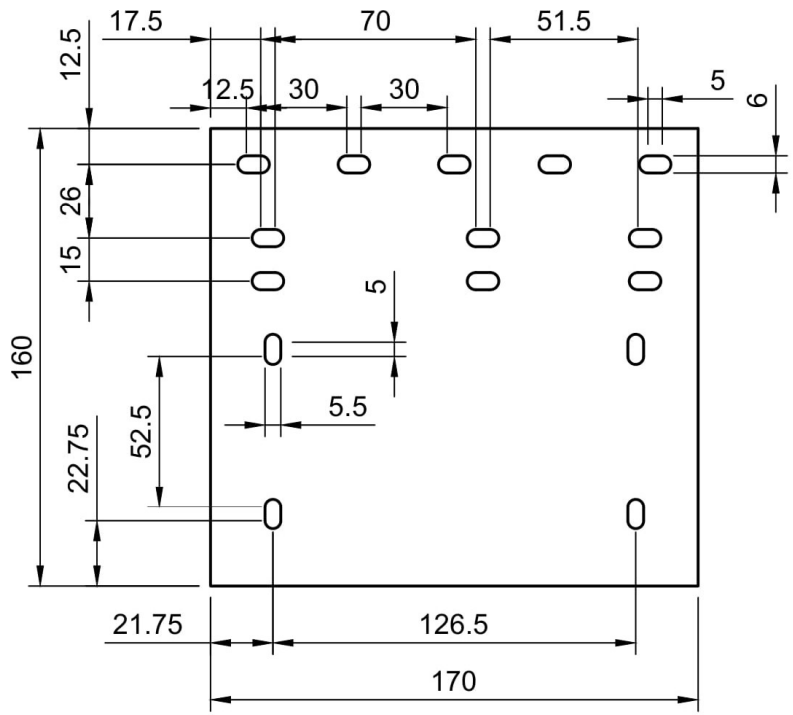

Dept.	Technical reference	Created by Lam Teng Foong 25/7/2018	Approved by	
		Document type	Document status	
		Title 1D Laser Mount 3mm Aluminium Sheet Scale 1:2	DWG No.	
			Rev. / Date of issue	Sheet 1/1

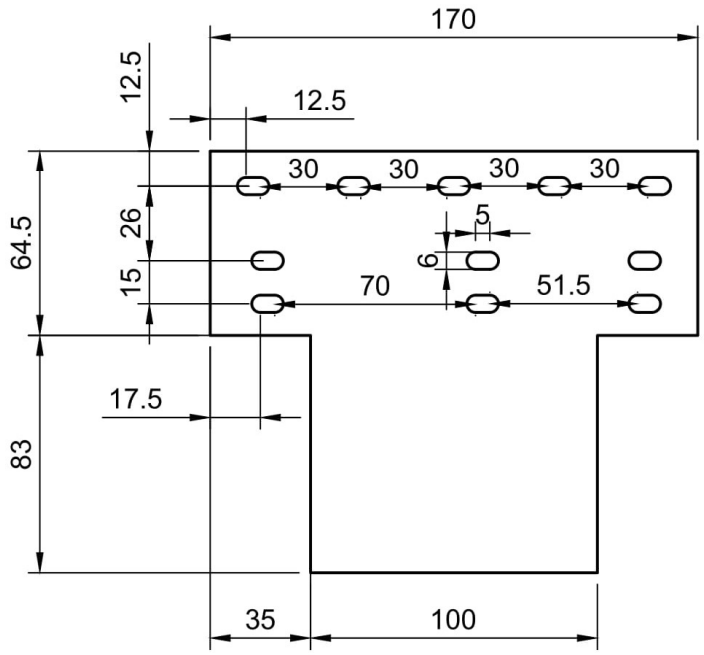

Dept.	Technical reference	Created by Lam Teng Foong 5/8/2018	Approved by	
		Document type	Document status	
		Title 1D Laser Spacer 3mm Acrylic Sheet Scale 1:2	DWG No.	
			Rev. / Date of issue	Sheet 1/1

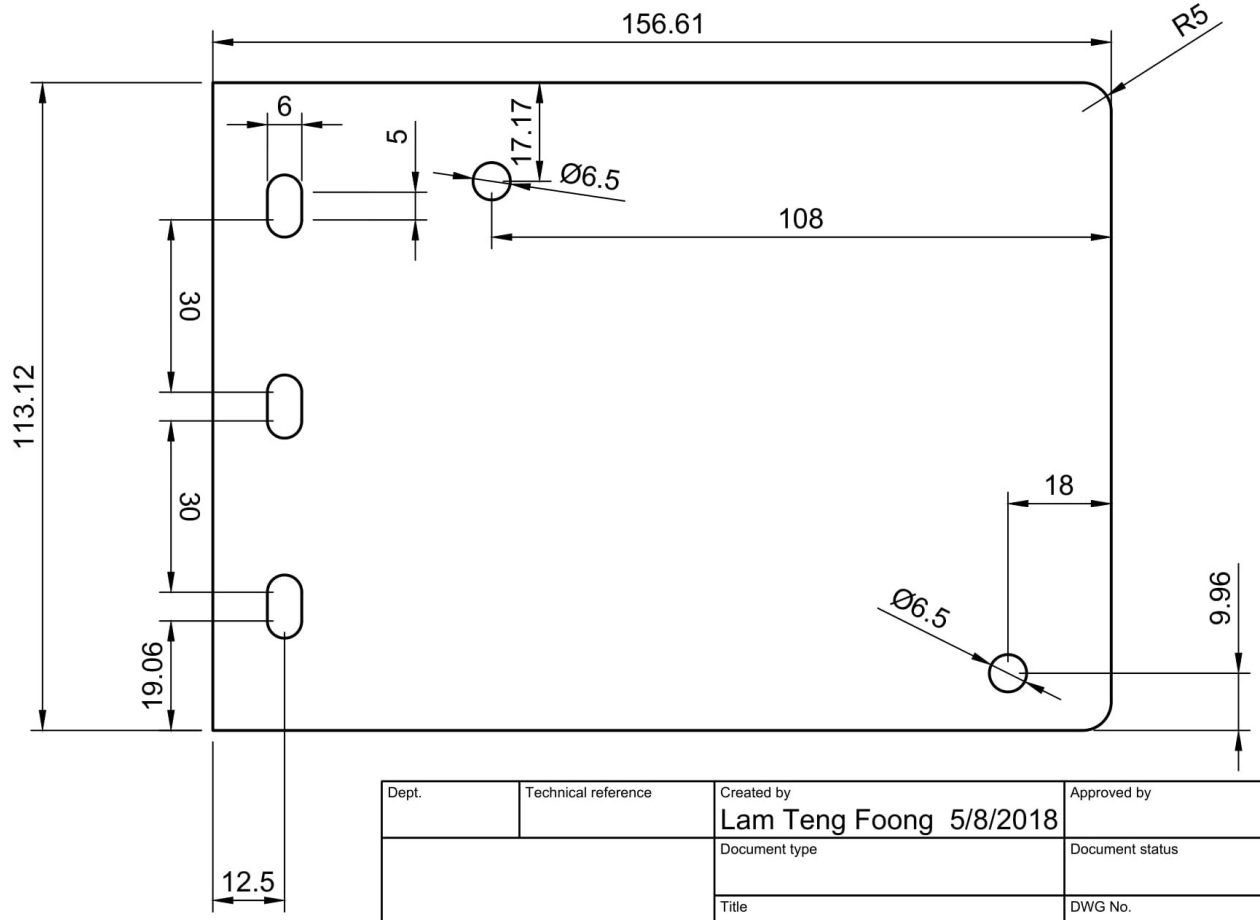

Dept.	Technical reference	Created by Lam Teng Foong 5/8/2018	Approved by	
		Document type	Document status	
		Title 2D Laser Mount 3mm Aluminium Sheet Scale 1:1	DWG No.	
			Rev. / Date of issue	Sheet 1/1

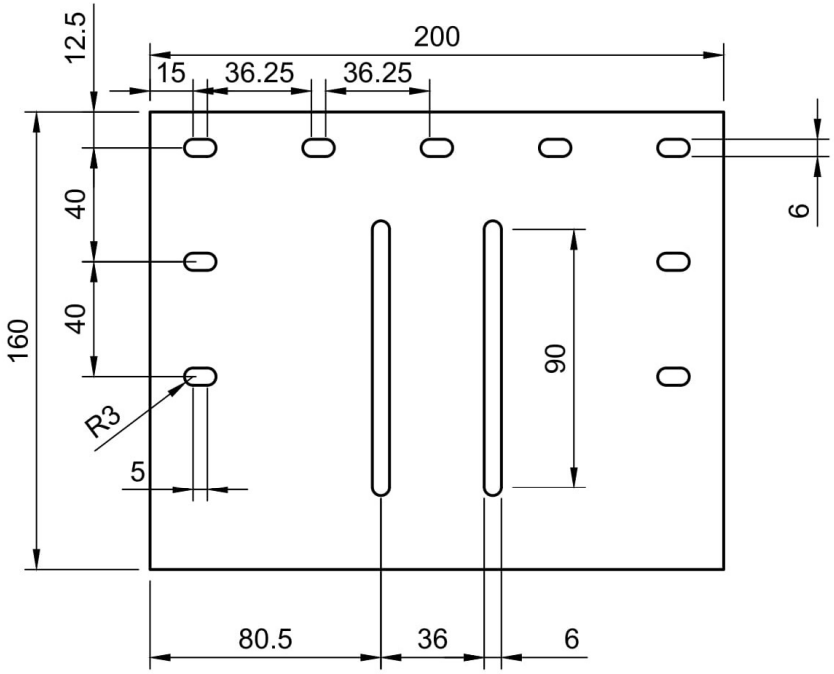

Dept.	Technical reference	Created by Lam Teng Foong 25/7/2018	Approved by		
		Document type	Document status		
		Title 2D Laser Position Plate 3mm Aluminium Sheet Scale 1:2	DWG No.		
			Rev.	Date of issue	Sheet 1/1

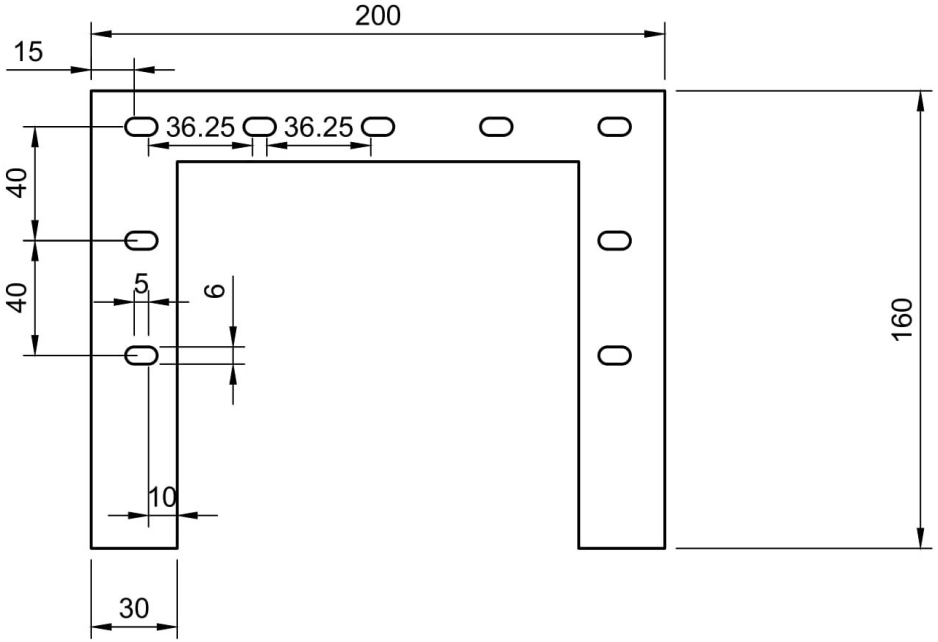

Dept.	Technical reference	Created by Lam Teng Foong 5/8/2018	Approved by		
		Document type	Document status		
		Title 1D Laser Spacer 3mm Arcylic Sheet Scale 1:2	DWG No.		
			Rev.	Date of issue	Sheet 1/1

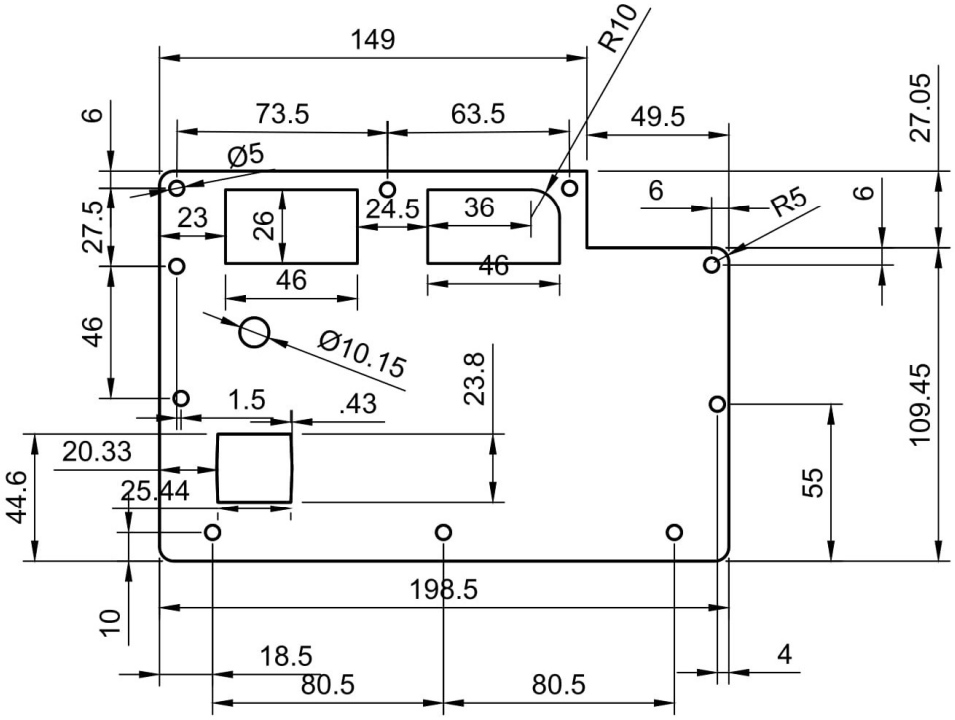

Dept.	Technical reference	Created by Lam Teng Foong 5/8/2018	Approved by	
		Document type	Document status	
		Title Arm Electronics Cover 3mm Acrylic Sheet Scale 1:1	DWG No.	
			Rev. / Date of issue	Sheet 1/1

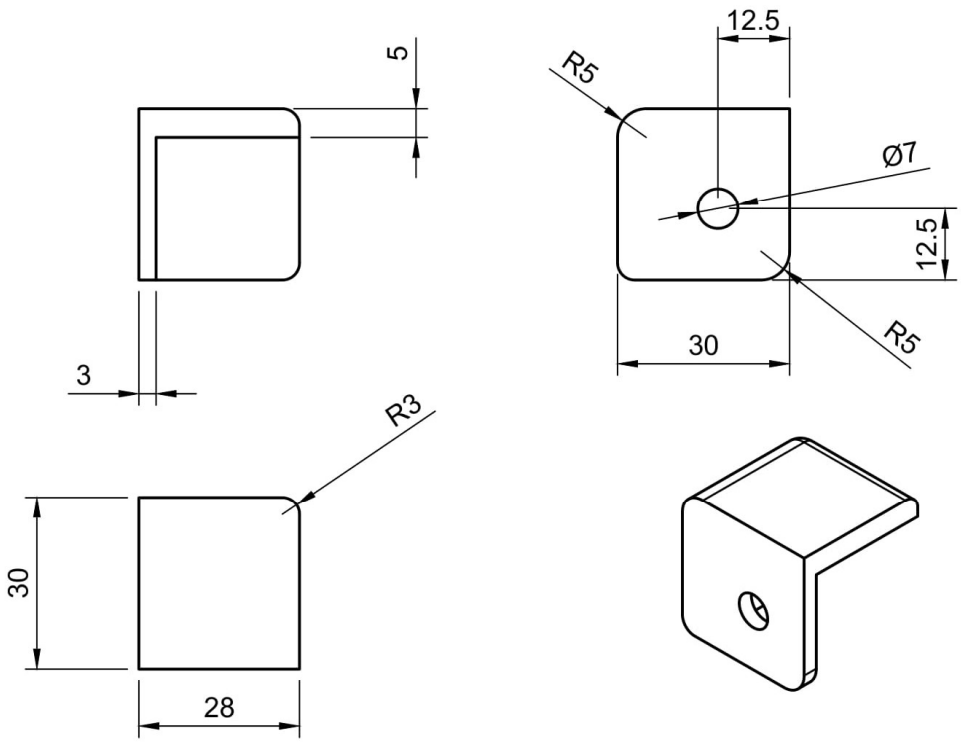

Dept.	Technical reference	Created by Lam Teng Foong 5/8/2018	Approved by		
		Document type	Document status		
		Title Corner Cover PLA Plastic Scale 1:1	DWG No.		
			Rev.	Date of issue	Sheet 1/1

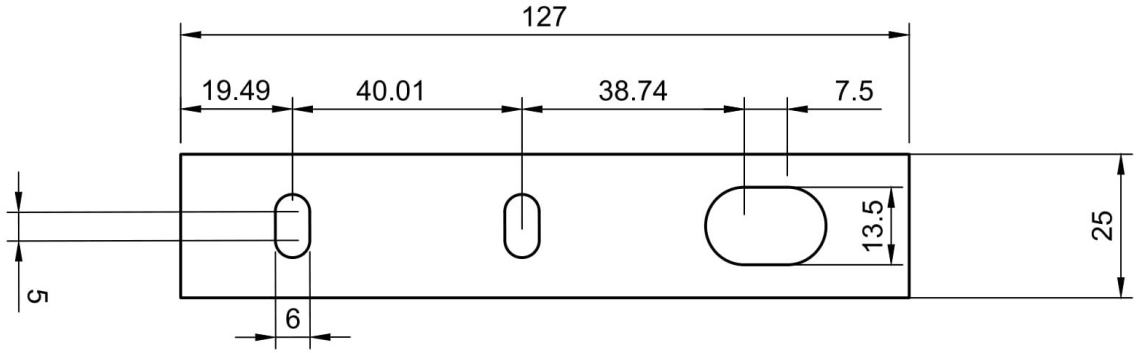

Dept.	Technical reference	Created by Lam Teng Foong 5/8/2018	Approved by		
		Document type	Document status		
		Title Crossbar Middle Mount (Inner) 3mm Aluminium Sheet Scale 1:1	DWG No.		
			Rev.	Date of issue	Sheet 1/1

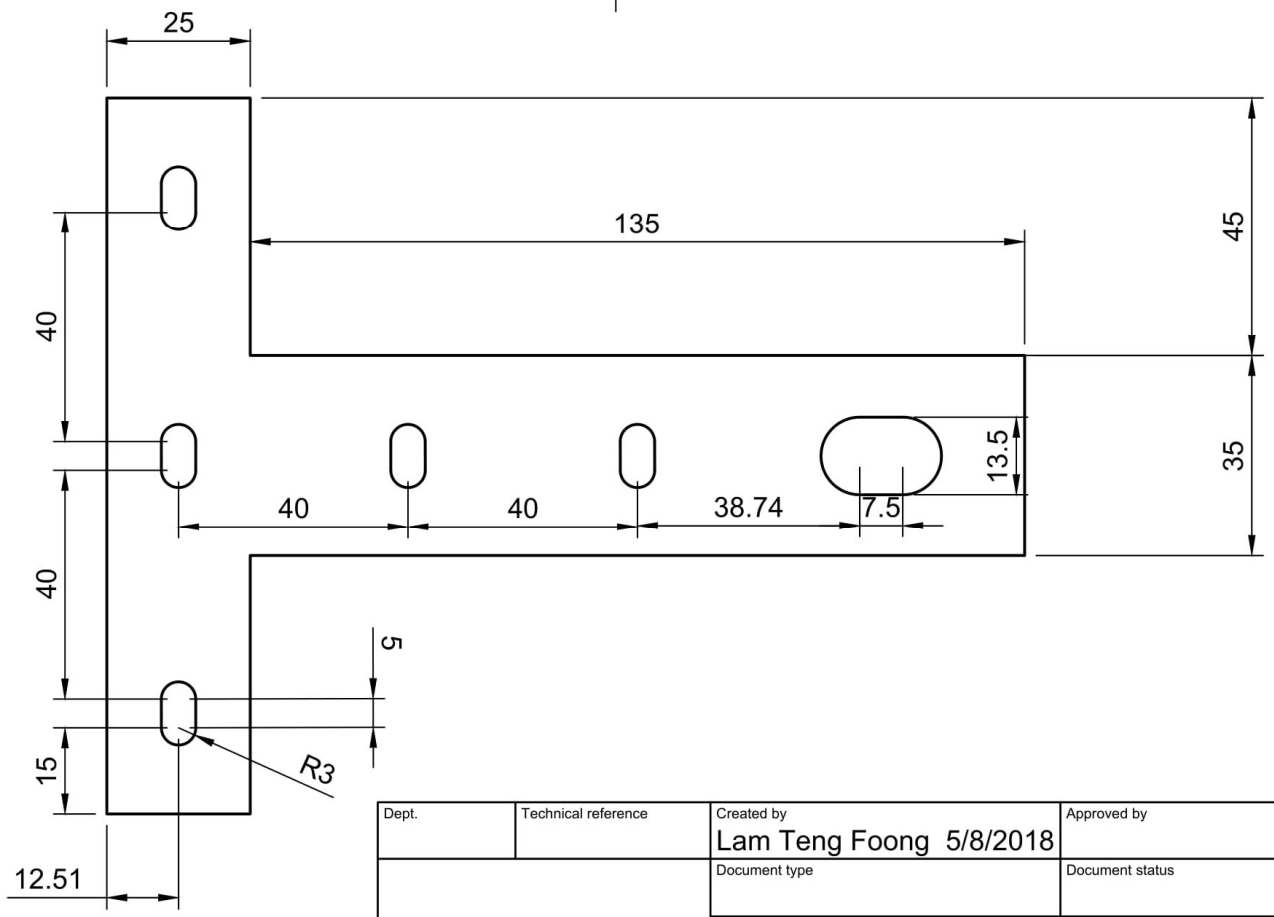

Dept.	Technical reference	Created by Lam Teng Foong 5/8/2018	Approved by	
		Document type	Document status	
		Title Crossbar Middle Mount (Outer) 3mm Aluminium Sheet Scale 1:1	DWG No. Rev. / Date of issue	Sheet 1/1

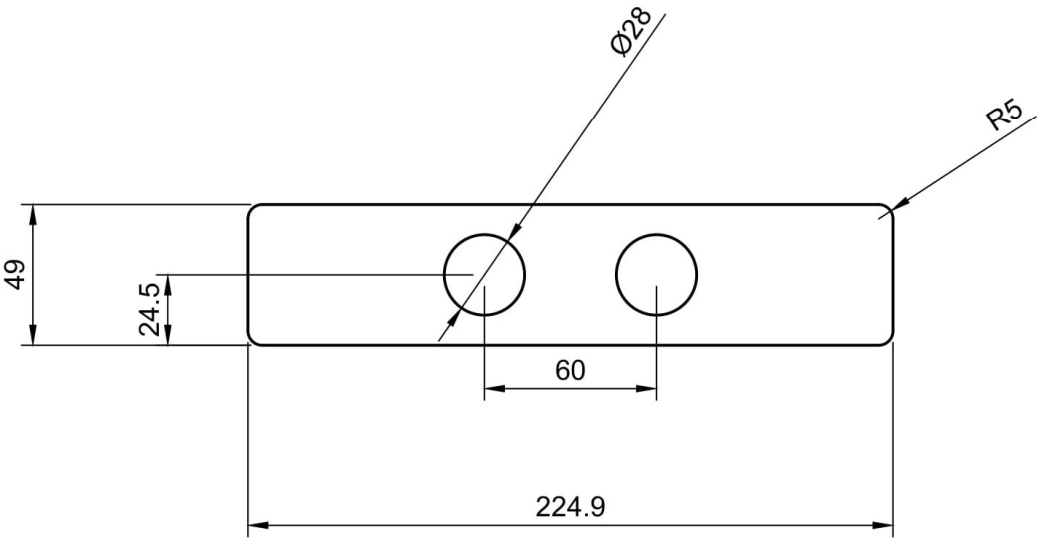

Dept.	Technical reference	Created by Lam Teng Foong 5/8/2018	Approved by		
		Document type	Document status		
		Title Crossbar Padding 3mm Arcylic Sheet Scale 1:2	DWG No.		
			Rev.	Date of issue	Sheet 1/1

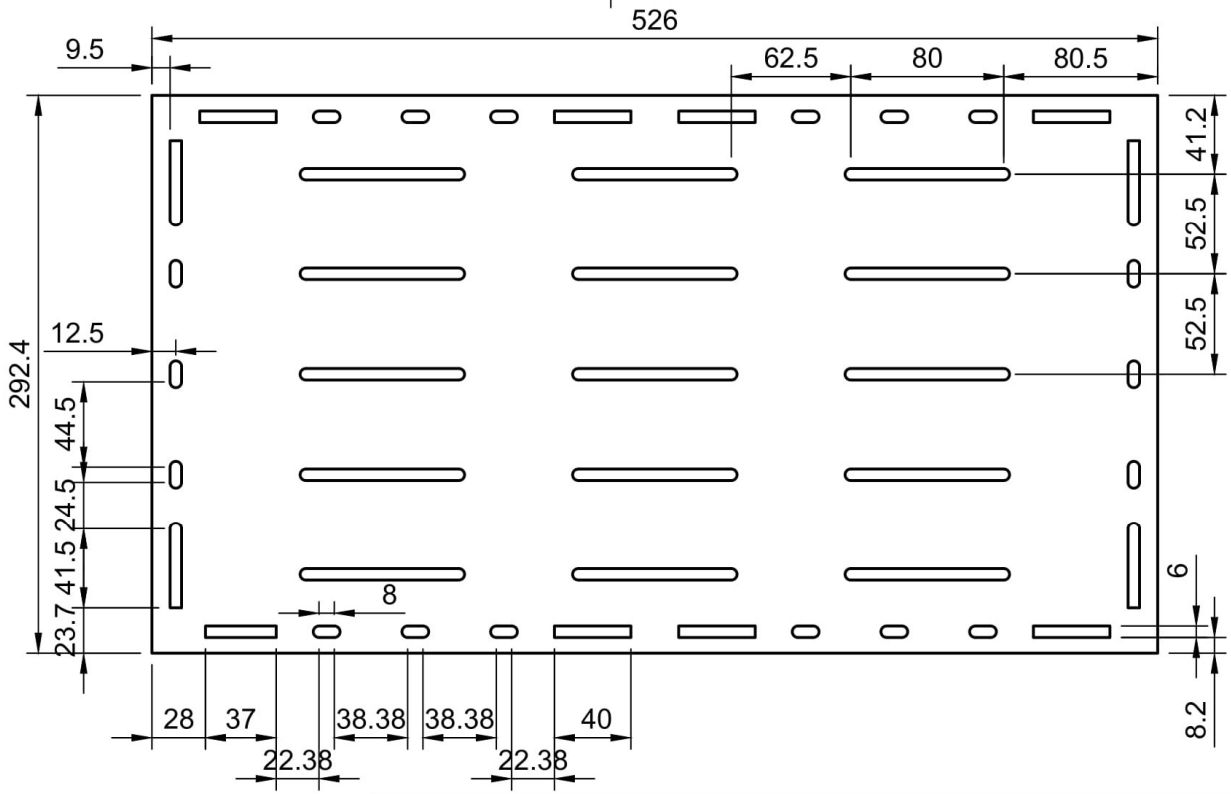

Dept.	Technical reference	Created by Lam Teng Foong 20/7/2018	Approved by	
		Document type	Document status	
		Title Electronics Box Plate 3mm Aluminium Plate Scale 1:3	DWG No.	
			Rev. / Date of issue	Sheet 1/1

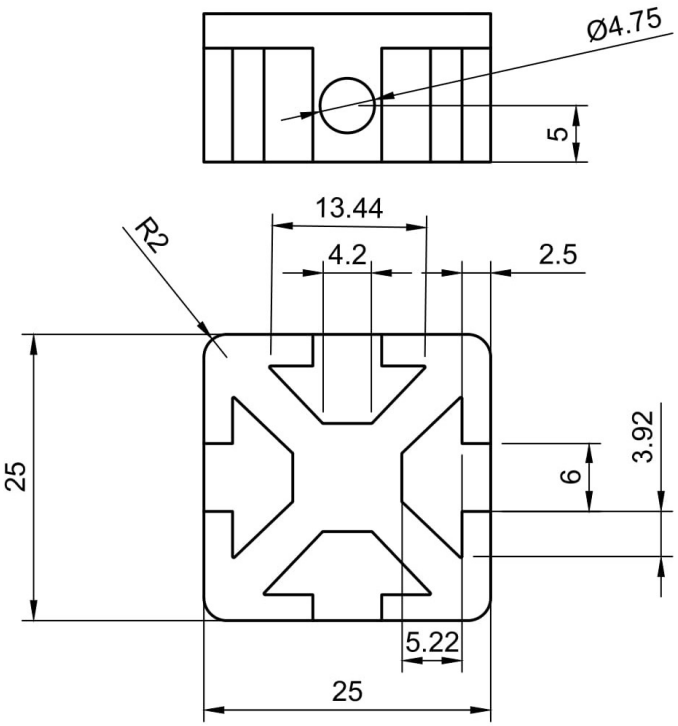

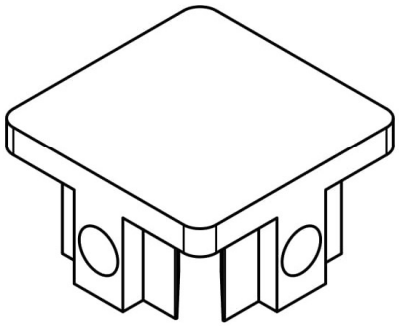

Dept.	Technical reference	Created by Lam Teng Foong 5/8/2018	Approved by	
		Document type	Document status	
		Title End Cap PLA Plastic Scale 2:1	DWG No.	
			Rev. / Date of issue	Sheet 1/1

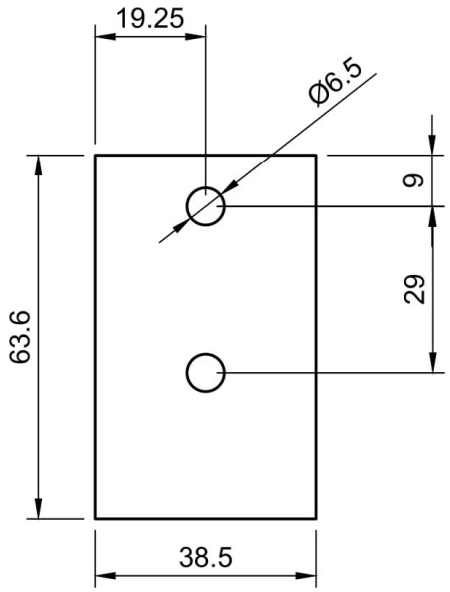

Dept.	Technical reference	Created by Lam Teng Foong 5/8/2018	Approved by		
		Document type	Document status		
		Title Front Arm Cover 3mm Arcylic Sheet Scale 1:1	DWG No.		
			Rev.	Date of issue	Sheet 1/1

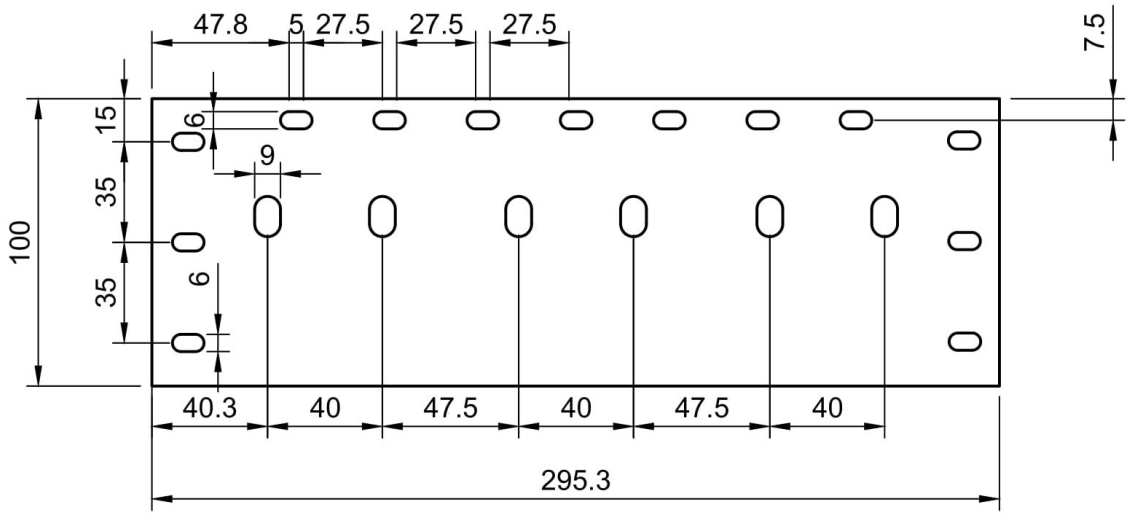

Dept.	Technical reference	Created by Lam Teng Foong 20/7/2018	Approved by		
		Document type	Document status		
		Title L Plate (Horizontal) 4mm Aluminium Plate Scale 1:2	DWG No.		
			Rev.	Date of issue	Sheet 1/1

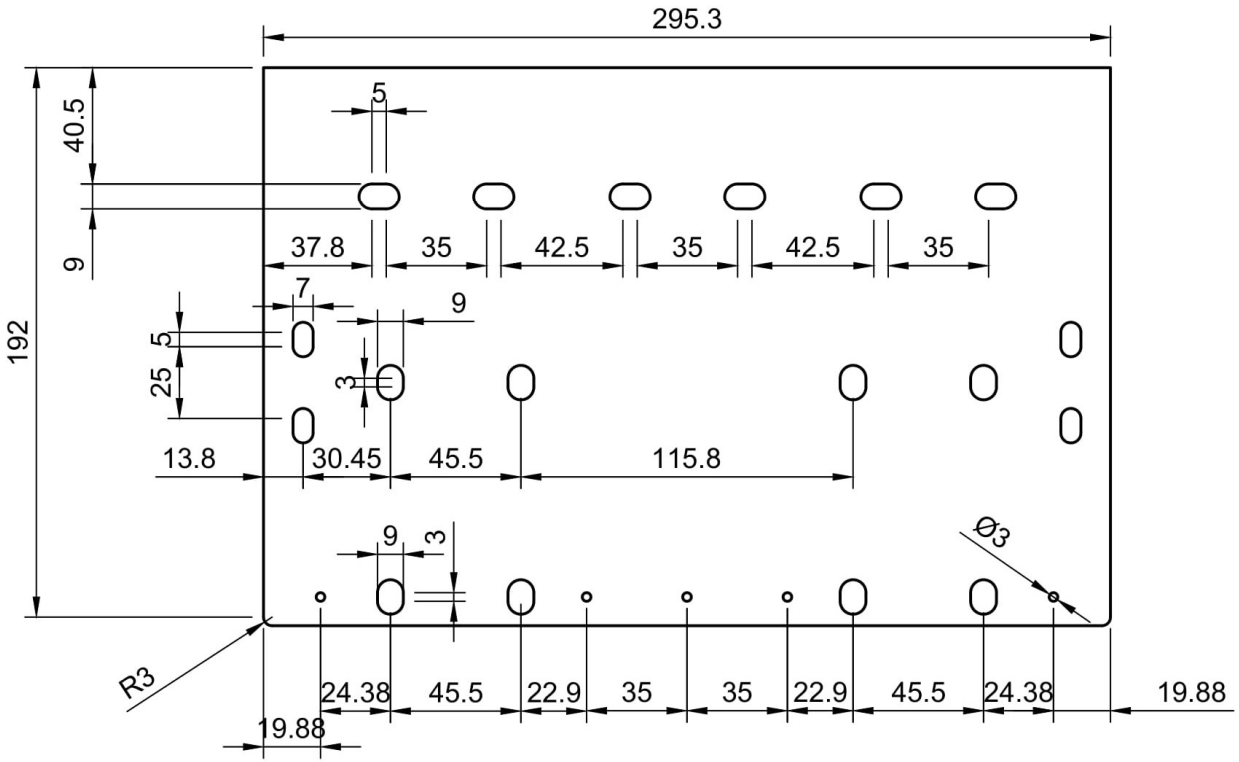

Dept.	Technical reference	Created by Lam Teng Foong 20/7/2018	Approved by	
		Document type	Document status	
		Title Left L Plate (Vertical) 4mm Almuminium Sheet	DWG No.	
			Rev. / Date of issue	Sheet 1/1

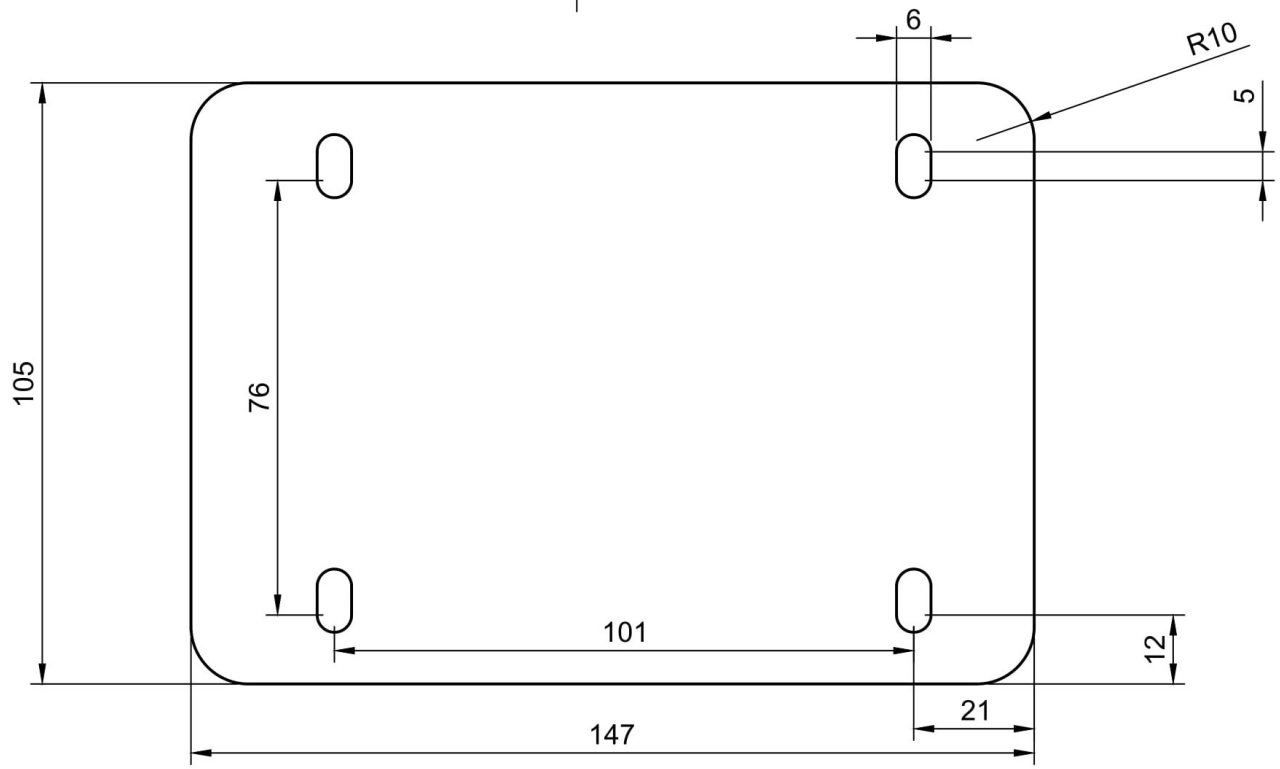

Dept.	Technical reference	Created by Lam Teng Foong 5/8/2018	Approved by	
		Document type	Document status	
		Title RFID Cover 3mm Acrylic Sheet Scale 1:1	DWG No.	
			Rev. / Date of issue	Sheet 1/1

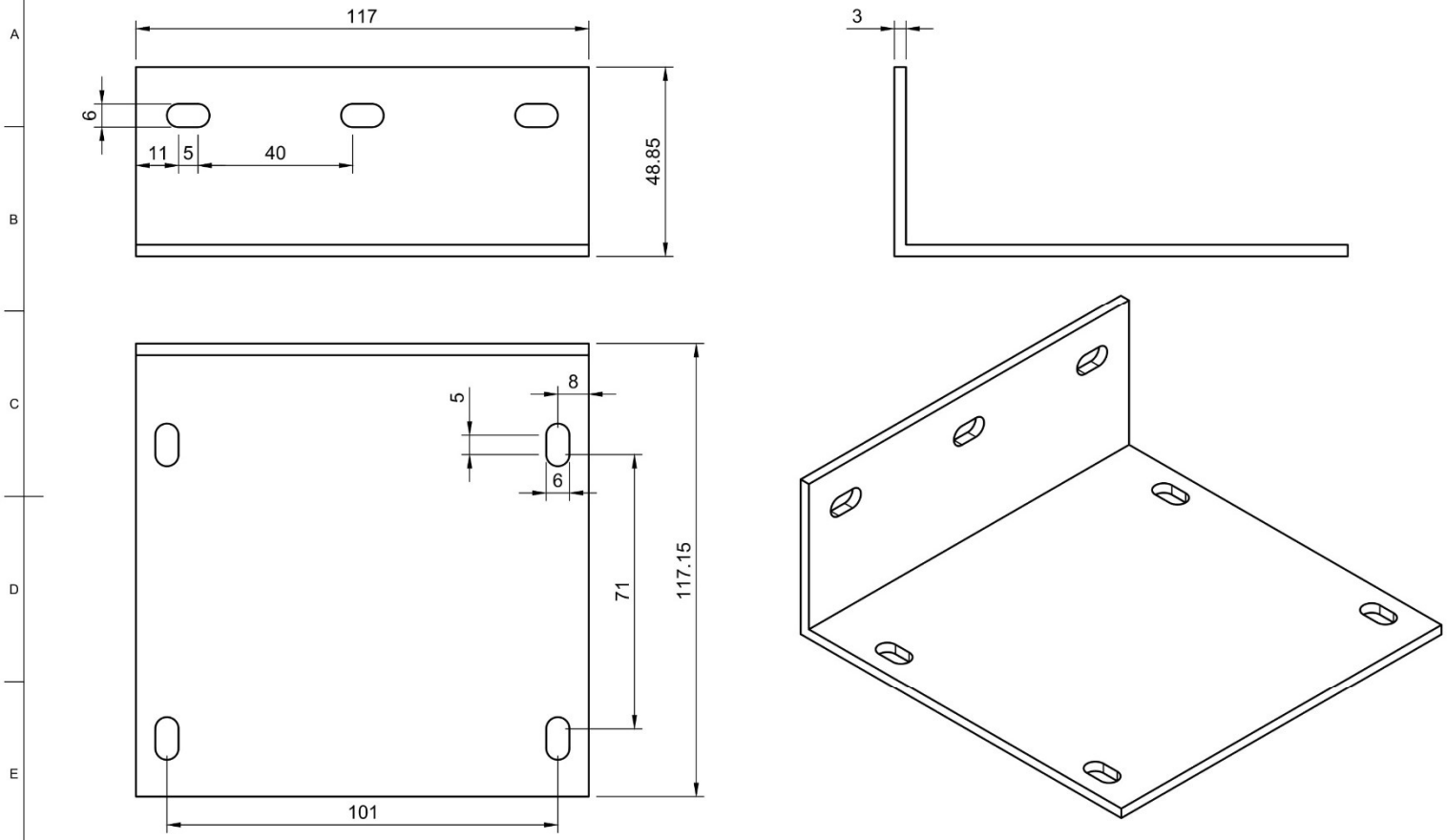

Dept.	Technical reference	Created by	Approved by
		Lam Teng Foong 5/8/2018	
		Document type	Document status
		Title	DWG No.
		RFID Reader Bracket 3mm Aluminium Sheet Scale 1:1	Rev. / Date of issue / Sheet 1/1

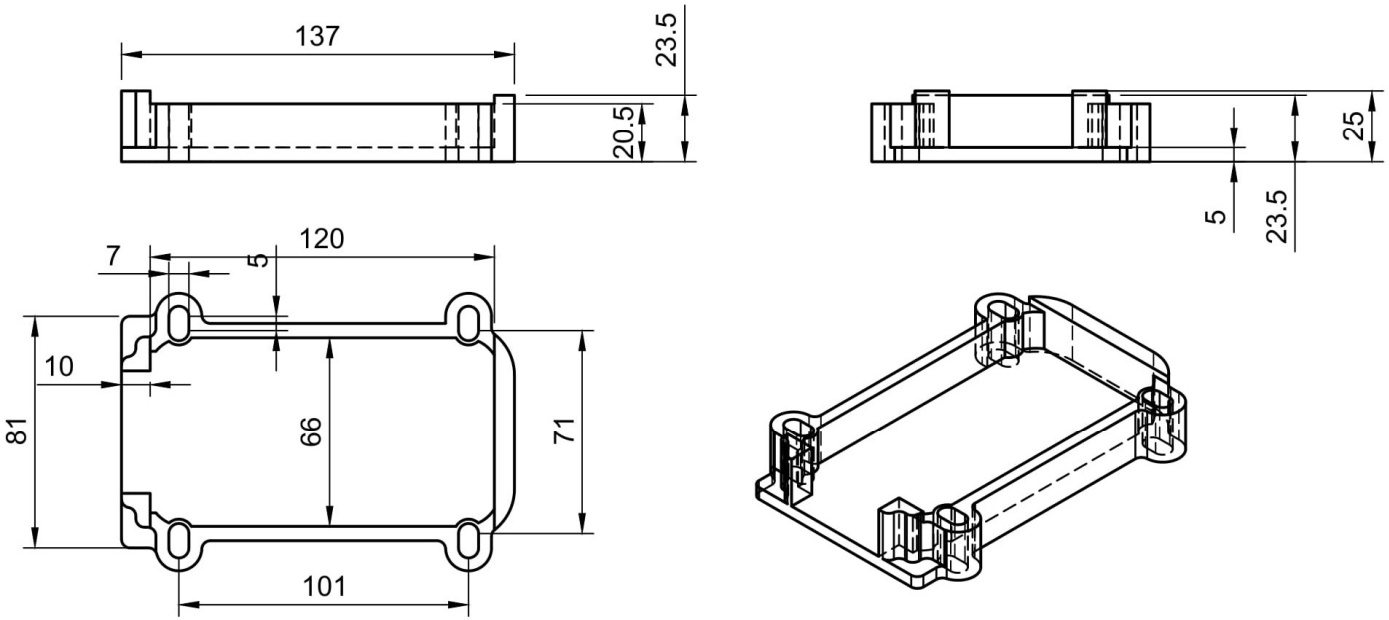

Dept.	Technical reference	Created by Lam Teng Foong 5/8/2018	Approved by		
		Document type	Document status		
		Title RFID Reader Shield PLA Plastic Scale 1:2	DWG No.		
			Rev.	Date of issue	Sheet 1/1

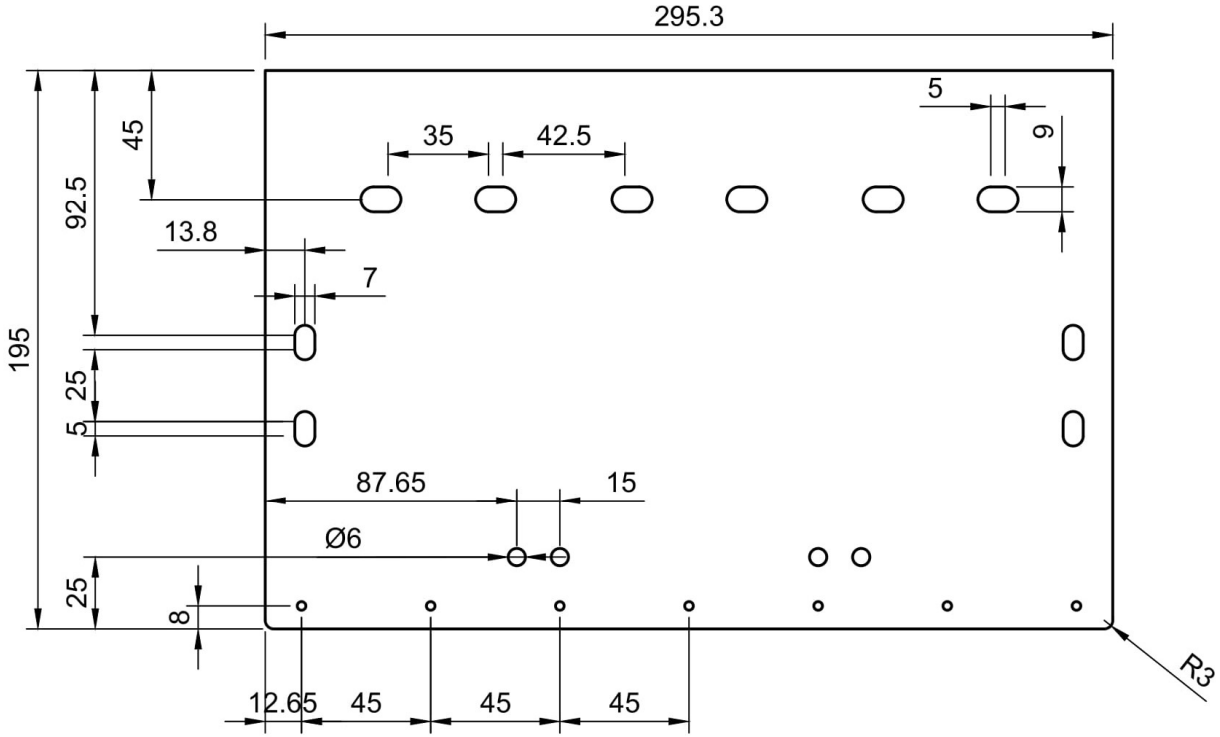

Dept.	Technical reference	Created by Lam Teng Foong 20/7/2018	Approved by	
		Document type	Document status	
		Title Right L Plate (Vertical) 4mm Aluminium Plate Scale 1:2	DWG No.	
			Rev. / Date of issue	Sheet 1/1

5. Fabrication Processes

The recommended fabrication steps for the parts specified in the previous sections are detailed in the tables below. Bullet points specify the components required for a single sub-assembly component.

Sub-Assemblies:

5) 1 x Sensor Platform
    - 1 x Electronic Box Plate
    - 1 x Left L Plate (Vertical plate)
    - 1 x Right L Plate (Vertical)
    - 2 x L Plate (Horizontal)
    - 2 x Crossbar Middle Mount (Outer)
    - 2 x Crossbar Middle Mount (Inner)
    - 5 x End Caps
6) 1D Laser Sensor Assembly
    - 1 x 1D Laser Mount
    - 2 x 1D Laser Spacer
7) RFID Reader Assembly
    - 1 x RFID Cover
    - 1 x RFID Reader Bracket
    - 1 x RFID Reader Shield
8) 2 x 2D Laser Sensor Assembly
    - 2 x 2D Laser Spacer
    - 2 x 2D Laser Position Plate
    - 1 x 2D Laser Mount
    - 2 x End Cap
9) 2 x Sweeper Unit Assembly
    - 1 x Corner Cover
    - 1 x Sweeper Limiter

- 1 x End Cap

10) 2 x Side Handle Assembly
    - 2 x End Cap
11) Other Cover Plates
    - 6 x Crossbar Padding
    - 2 x Arm Electronics Cover
    - 2 x Front Arm Cover

3.1 3D Printing of PLA Components

Op #	Part# Drawing #	Instructions and Parameters
01	M25-M28	Export the components from Autodesk Fusion 360 to STL format.
02		Print STL files at 20% infill, 60 speed setting and 0.8mm wall thickness with the exception of the One-Piece Suspension (30% infill, 60 speed setting and 1.4mm wall thickness). Add support when necessary.
03		Using a pair of pliers, remove and support and used a file to sand any rough edges.

3.2 Laser Cut of Acrylic Components

Op #	Part#	Instructions and Parameters

	Drawing #	
01	M21-M24	Using 3mm green acrylic, cut out the required parts (in DXF format) at 1.8 speed, 60 power and 700ppi.

3.3 Waterjet of Aluminium Components

Op #	Part# Drawing #	Instructions and Parameters
01	M09-M18	Water jet out require components at 60000 psi with alluvial abrasive.
02		Use a file to smoothen any sharp edges from the aluminium/aluminium-composite parts.

6. Assembly

Once all custom components in section 2 have been fabricated, the Orca is to be assembled according to the exploded diagrams shown below.

Step 1: Disassemble original ABT4530 trolley

Dismantle the following parts:

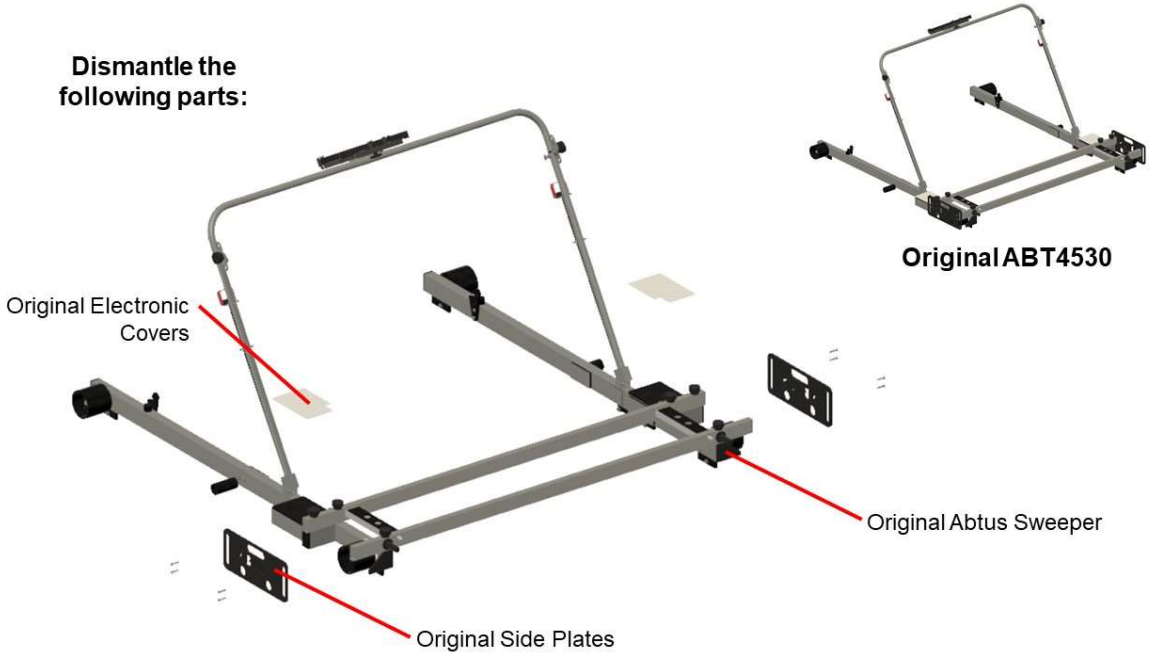

Step 2: Put together sensor platform

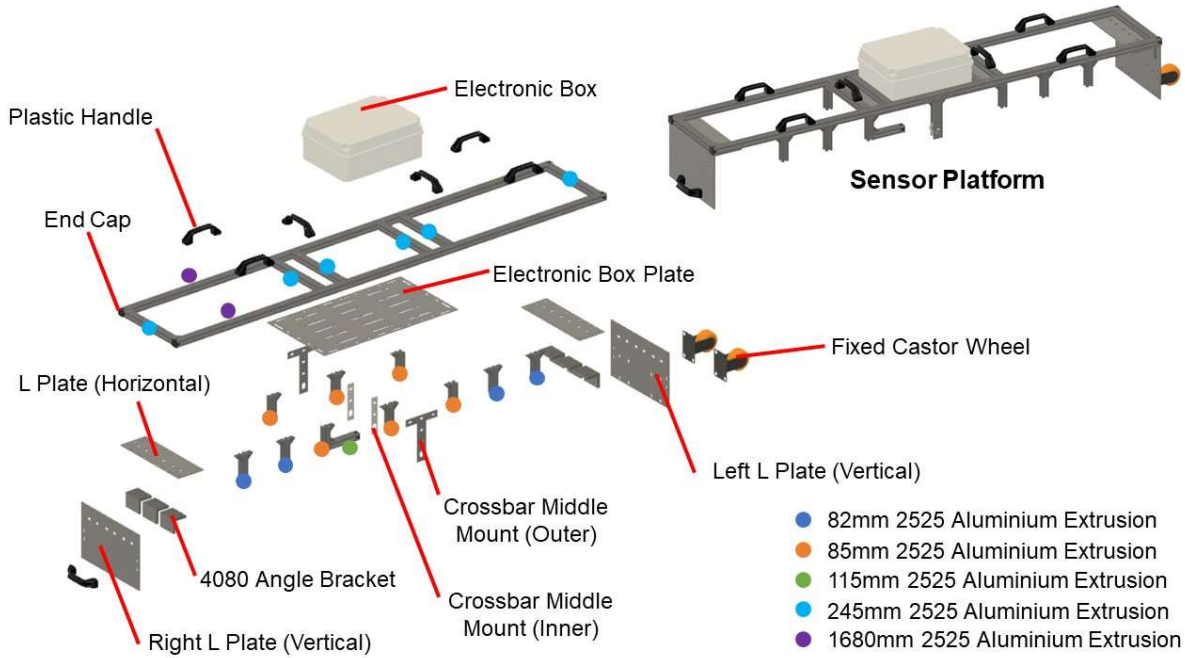

Step 3: Put together two side handle assemblies

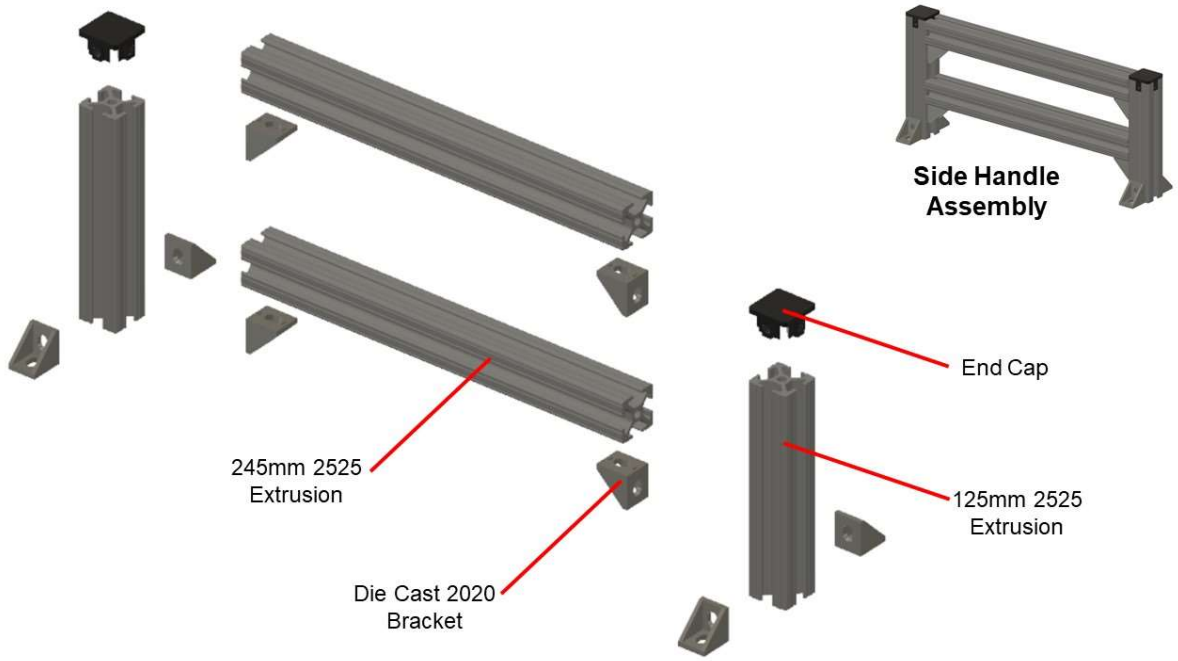
Side Handle
Assembly
End Cap
245mm 2525
Extrusion
125mm 2525
Extrusion
Die Cast 2020
Bracket

Step 4: Put together two 2D laser scanner assemblies

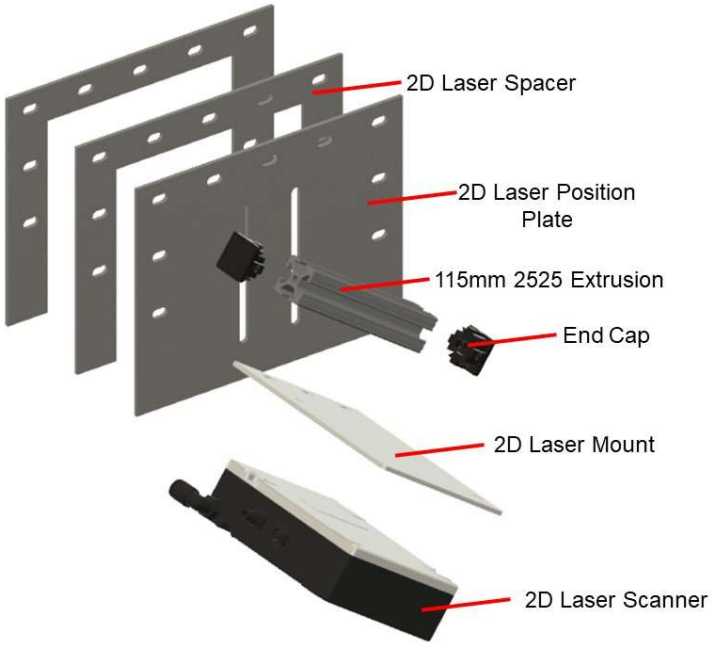

2D Laser Scanner Assembly

Step 5: Put together two sweeper unit assemblies

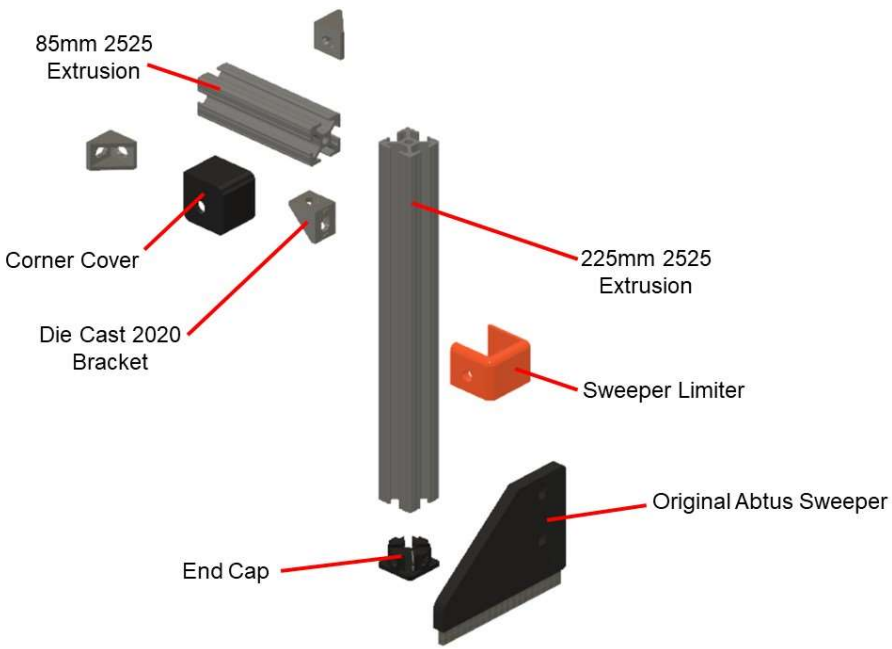

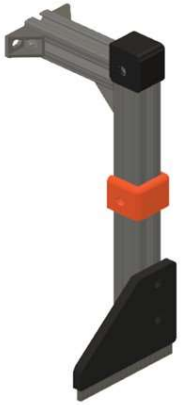

Sweeper Unit Assembly

Step 6: Put together 1D laser sensor assembly

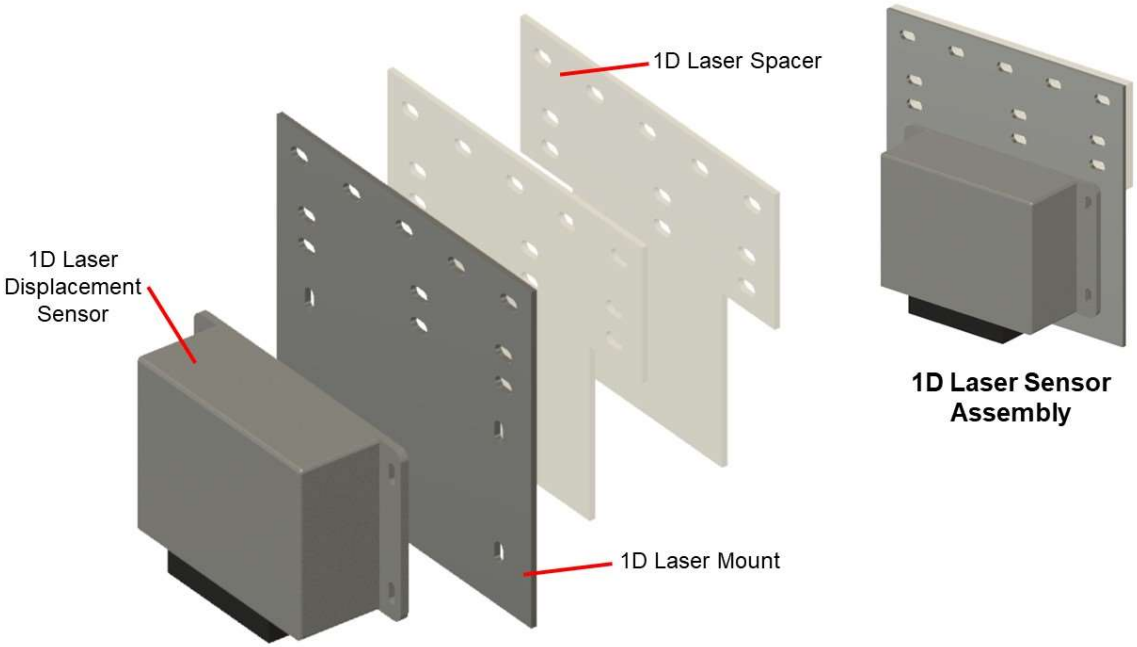

Step 7: Put together RFID reader assembly

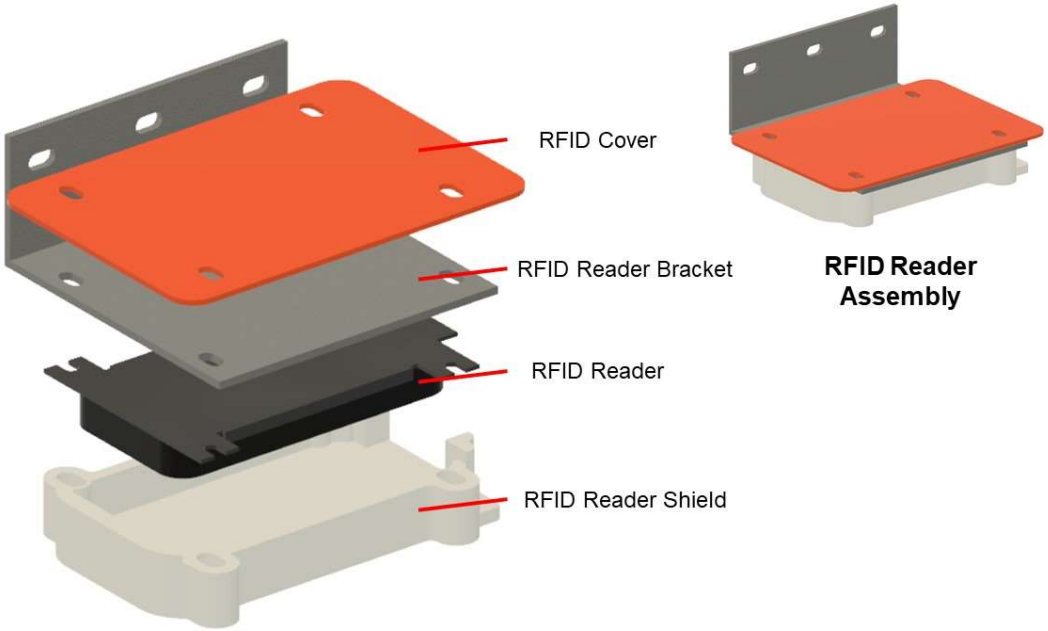
RFID Cover
RFID Reader Bracket
RFID Reader
RFID Reader Shield
RFID Reader Assembly

Step 8: Install all assemblies on sensor platform

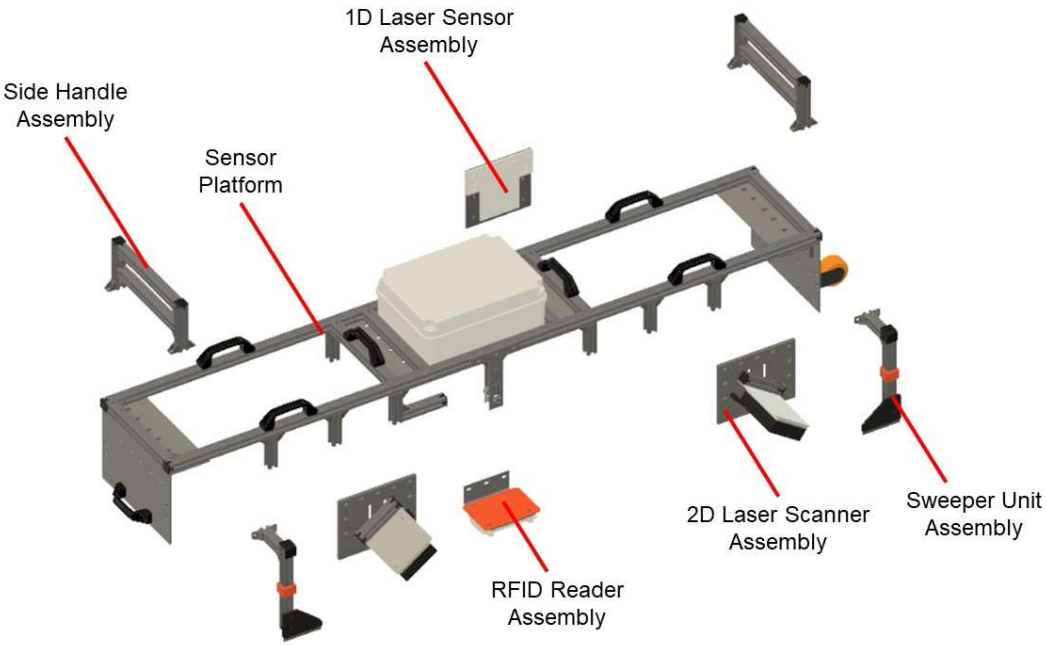

Step 9: Install sensor platform assembly and remaining plates on dismantled ABT3540

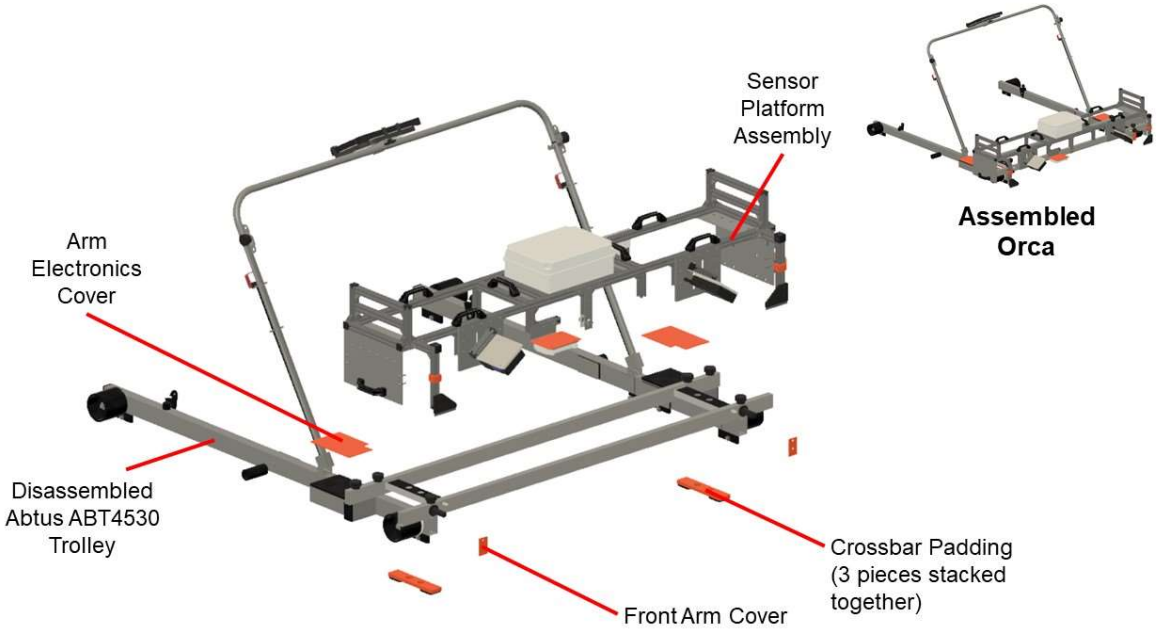
Sensor
Platform
Assembly
Assembled
Orca
Arm
Electronics
Cover
Disassembled
Abtus ABT4530
Trolley
Crossbar Padding
(3 pieces stacked
together)
Front Arm Cover

Annex 42 Capstone Bill of Materials

RAILORDS CAPSTONE BILL OF MATERIALS (TOTAL BUDGET $35,000)

Purchased					CLAIM FILED	$RECEIVED	NOTES
Item Name	**Units**	**Unit Cost**	**Total Cost**	**Buyer**			
RFID Reader (Identix)+ 20 Omni Exo Tags	2	958.08	1916.16				
Magnets	1	50	50				
Unicell Batteries	1	93.56	93.56				
Caster Wheels/Hinges	1	27.93	27.93				
Springs	1	17.52	17.52				
Unicell-Battery Charger		31.4	31.4				
12V 4000mAh Batteries	1	180	180				
Identix USB RFID Reader	1	838.85	838.85				
Netgear Switch	1	47.1	47.1				
Rigid Castor Wheels	1	32.1	32.1				
12v 1800mAh Battery	1	25	25				
Fasteners(Bolts/Nuts)	1	22.92	22.92				
Laser Displacement Sensor (Optocom)	2	1660	3320	Joo			
2D Laser Scanner (Optocom)	2	7780	15560	Joo			
Arduino Ethernet Shields	5	33.5	167.5	LTF			
Reclosable Tape (Qoo10)	1	61.5	61.5	Joo			
Dual Lock and Cable Ties (Qoo10)	1	77.5	77.5	Joo			
IMU and Breakout Board (Mouser)	1	2659.55	2659.55	Joo			
Voltage Regulators and Micro USB Head (Lazada)	1	45.2	45.2	Joo (Card)			5 V.R. refunded
Voltage Sensor, Ethernet Cables and Ethernet Connector (AliExpress)	1	73.41	73.41	Joo (Card)			

Ban Heng Long 18x2000x220 Plywood	1	205.44	205.44	LTF			
MakerbeamXL	1	234.33	234.33	LTF			
Raspberry Pi 3 Model B +	1	278.73	278.73	LTF			
PTP 2525-6 Extrusions	1	227.27	227.27	LTF			
M5 Hex Socket Screws	1	72.39	72.39	LTF			
Linear Shaft	1	81.34	81.34	LTF			
Handles	1	9.59	9.59	LTF			
Encoder	1	258.62	258.62	LTF			
Adafruit 7 Segment	1	68.5	68.5	LTF (Card)			
EZBuy T Slot 2020 Nuts	1	90.67	90.67	LTF (Card)			
EZBuy Shipping Fee	1	22.99	22.99	LTF (Card)			
Heat Shrink	1	7.7	7.7	LTF (Card)			
Seeed: W5500 Ethernet Shield	1	167.51	167.51	Joo (Card)			
Taobao: 340*270*120 Electronic Box	1	88.85	88.85	Joo (Card)			
Side Wheels	1	31.7	31.7	Nick			
Batteries + Hub motor	1	323.09	323.09	Nick			
Battery Indicator	1	40.58	40.58	Nick			
ESC + Batteries	1	105.95	105.95	Nick			
2 X Micro SD Card	1	44.4	44.4	Nick			
SGBOTIC Relay Switch	1	25.57	25.57	Joo			
Voltage Regulators,	1	22	22	Joo			
Cable Management	1	65.71	65.71	Joo			
Switches and Cable Clips	1	153.45	153.45	Joo			
Stainless Steel Button	1	5.74	5.74	Joo			

Mounting Brackets	1	17.68	17.68	Joo			
USB 2.0 to RS232 CABLE	1	7.4	7.4	Joo			
USB 2.0 to RS232 CABLE	1	9.23	9.23	Joo			
RS232 Female-Female Connector	1	4.68	4.68	Joo			
Voltage Regulators and USB Heads	1	45.20	45.20	Joo			
Ethernet Connection and Voltage Sensors	1	98.79	98.79	Joo			
2D Laser Briefcase	1	43.51	43.51	Joo			
IMU Circuit Components	1	64.23	64.23	Joo			
Arduinos and Raspberry Pis Spare	1	338.80	338.80	Joo			
Hot Glue	1	11.00	11.00	Joo			
Hot Glue Gun	1	27.49	27.49	Joo			
Fireproof Bag	1	13.90	13.90	Joo			
Lazada Super Glue, Batteries, and Steel Rings	1	172.73	172.73	Joo			
Prototype Transportation (Car Rental)	1	530.00	530.00	Joo			
Ethernet Switch	1	170.49	170.49	Joo			
Cable Clip Clamp	5	17.16	17.16	LTF			
Linear Shaft and Bearing	4	81.34	81.34	LTF			
Assorted M5 Bolts	1	72.39	72.39	LTF			
Hengstler Encoder	1	258.62	258.62	LTF			
Strip Brush	1	30.74	30.74	LTF			
8mm Linear Shaft	8	41.70	41.70	LTF			
Handles	2	16.50	16.50	LTF			
Handles	5	19.49	19.49	LTF			
Handles	5	19.49	19.49	LTF			
Torchlight Mounts	8	28.33	28.33	LTF			
Torchlight	2	37.84	37.84	LTF			
Mini USB Adaptor	1	4	4	Nick			
12V 4800mAh Battery/Switch	1	242.5	242.5	Nick			

Screws/ Anti Slip Tape	1	15.9	15.9	Nick			
Skateboard Wheels	1	31.7	31.7	Nick			
Li-ion Charger	1	43	43	Nick			
S.S Brackets/ Grease Spray	1	25.5	25.5	Nick			
S.S Brackets	1	7.8	7.8	Nick			
Timing Belt	1	10.7	10.7	Nick			
Rubber	1	6.4	6.4	Nick			
Net Sleeve	1	5	5	Nick			
Electrical Box	1	24.61	24.61	Nick			
Gears/Timing Belts	1	186.18	186.18	Nick			
Copper weight	1	20.33	20.33	Nick			
Extension Brackets	1	18.19	18.19	Nick			
Aluminium Sheet	1	260.55	260.55	Nick			
Fasterner/Bolts/Nuts	1	26.54	26.54	Nick			
Alu Composite/Acrylic	1	67.46	67.46	Nick			
Poster	1	30	30	LTF			
Maker Beam XL 60cm	1	135.03	135.03	LTF			
Magnetic Strip	1	13.6	13.6	LTF			
Cab Fare (28/6/18)	1	34.95	34.95	LTF			
SD Card	1	16.9	16.9	Joo			
WiFi Dongle	1	18.5	18.5	Joo			
Maintenance Manuals	1	32.32	32.32	Joo			
Parking Fees	1	33.96	33.96	Nick			
Large Delivery Fees (>20SGD)							
Optocom Delivery	1		1600	Joo			
Transport Rails	1		1091.4	Joo			
Optocom Telegraphic Transfer	1		30	Joo			
Transport Rails (Return)	1		866.7				

	Total Expenditure	34953.81				
	Remaining Budget	42.23				