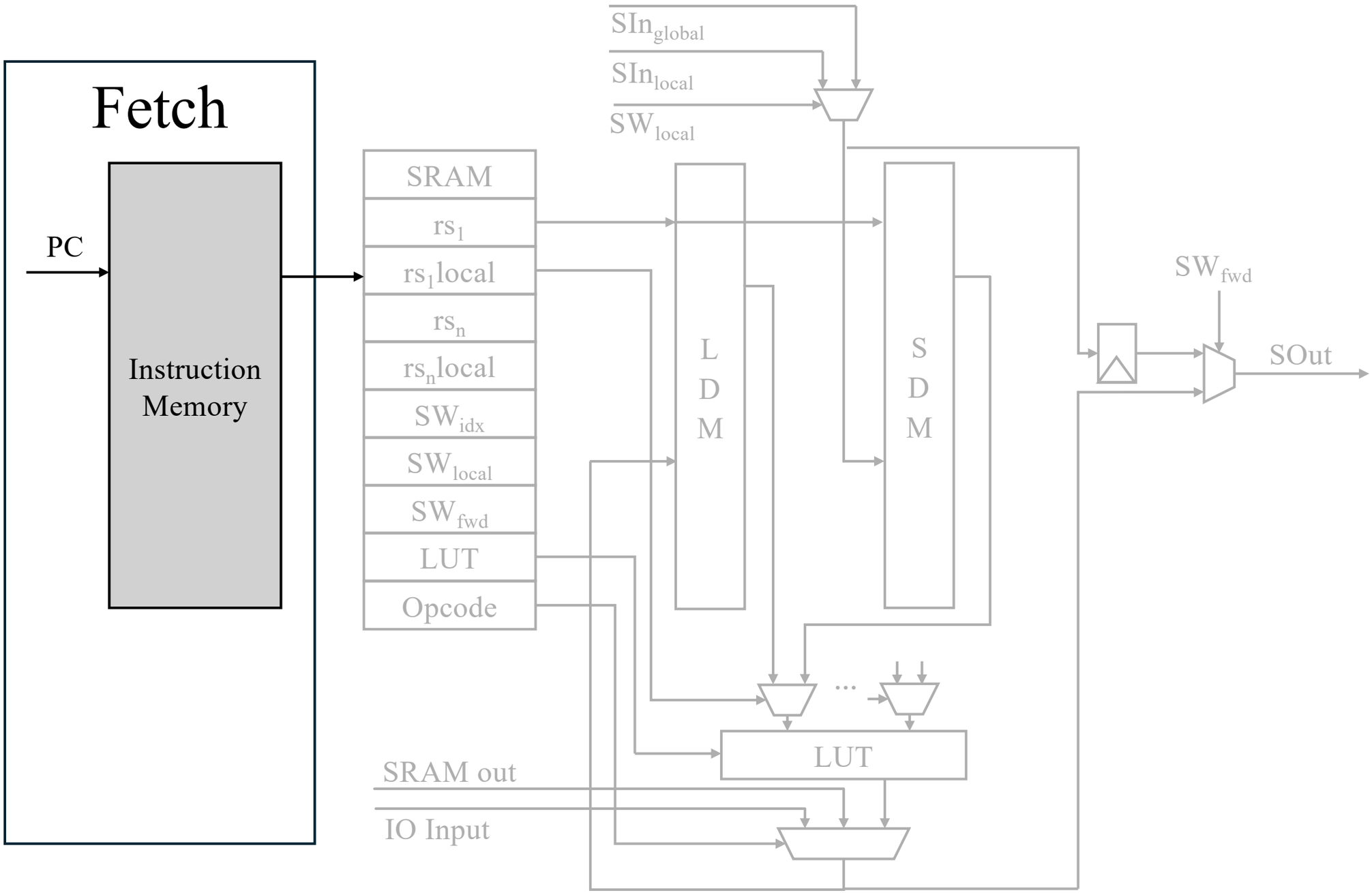
Fetch
PC
Instruction Memory
SRAM
rs1
rs1local
rsn
rsnlocal
SWidx
SWlocal
SWfwd
LUT
Opcode
SInglobal
SInlocal
SWlocal
L D M
S D M
SWfwd
SOut
...
LUT
SRAM out
IO Input