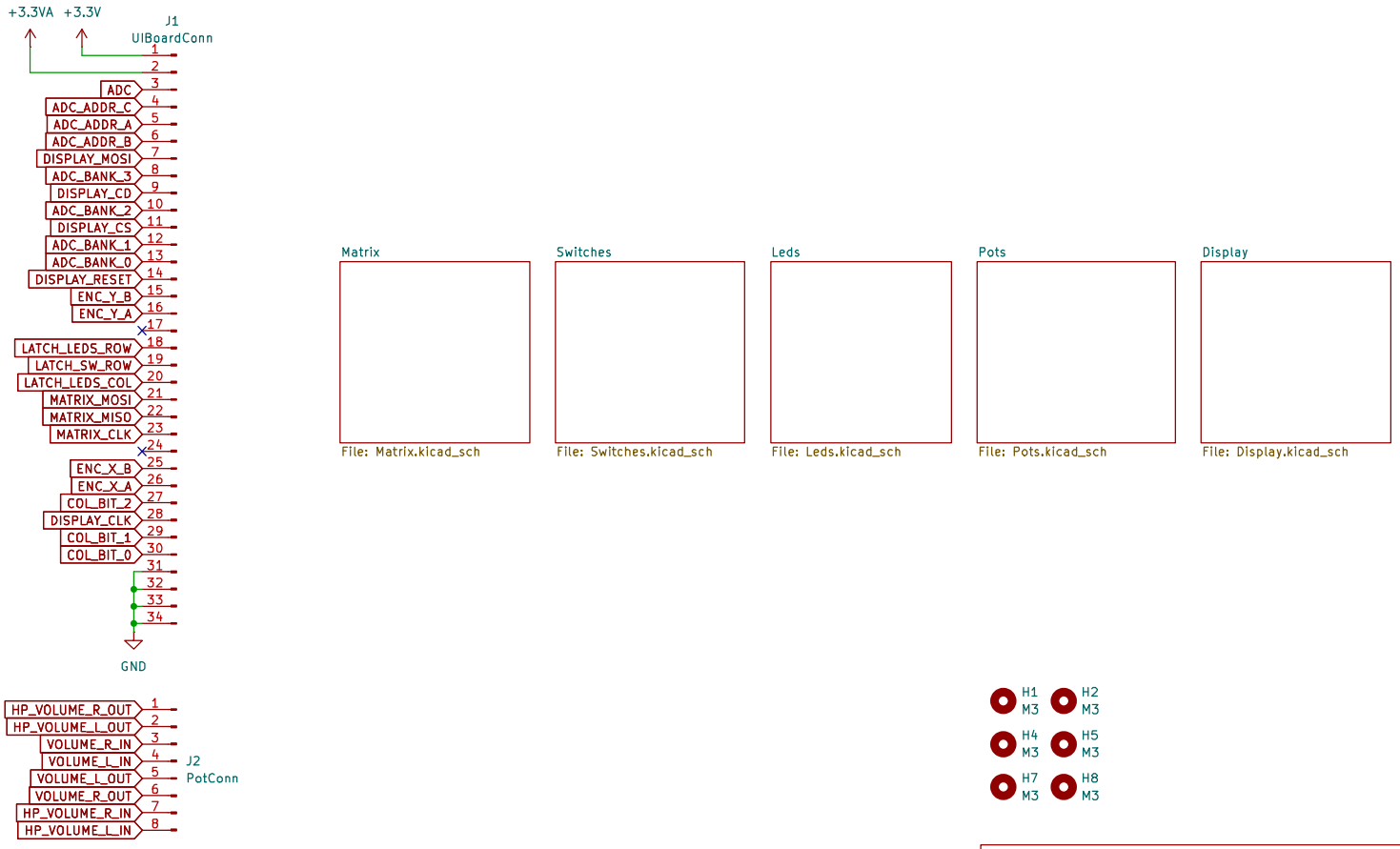


UI

Sheet: /
File: PolySynth_Ui.kicad_sch

**Title:**

| Size: A4 | Date: | Rev: |
|---|---|---|
| KiCad E.D.A. 9.0.6 | | Id: 1/6 |

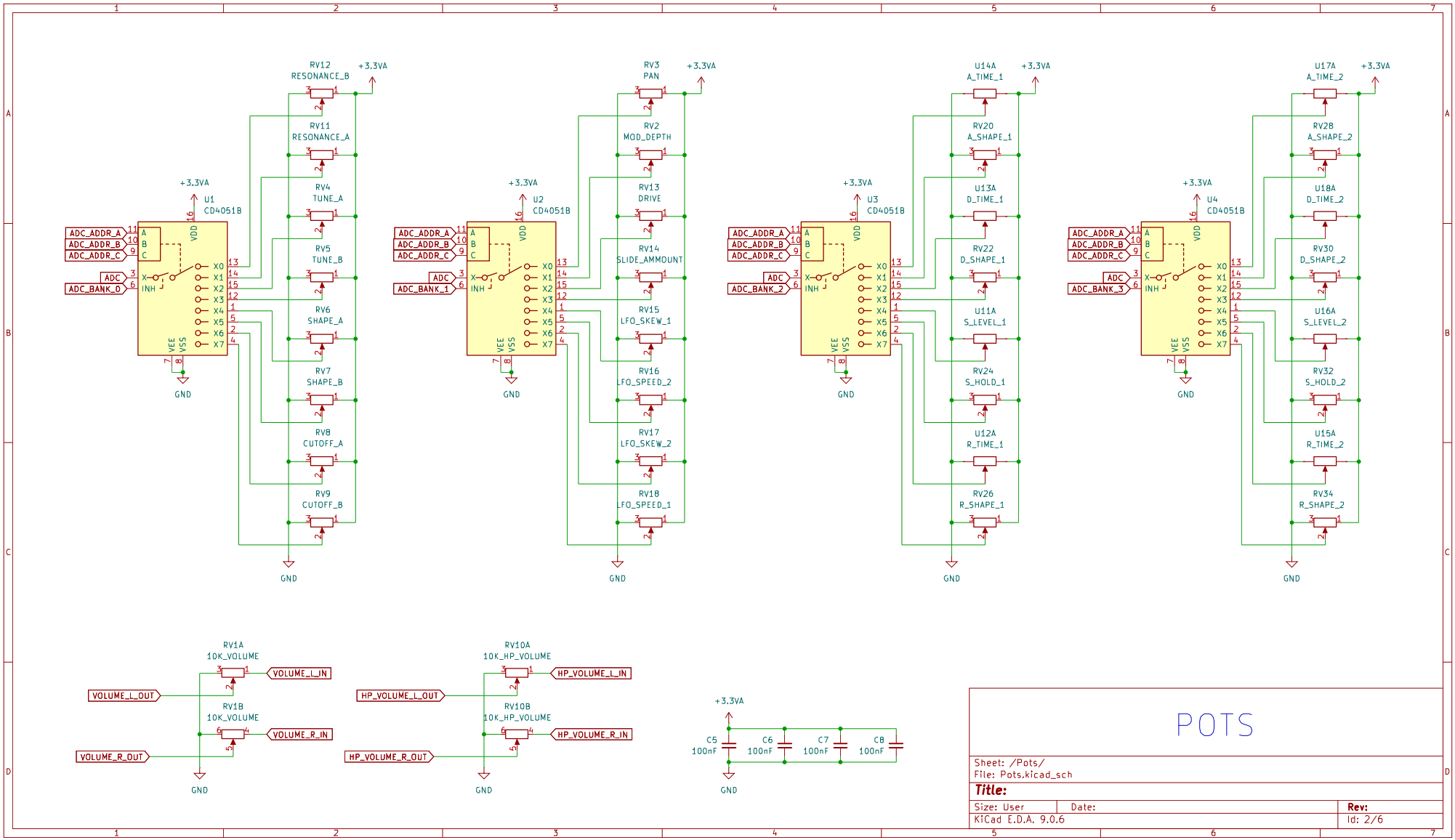


# POTS

Sheet: /Pots/
File: Pots.kicad_sch

**Title:**

| Size: User | Date: | **Rev:** |
|---|---|---|
| KiCad E.D.A. 9.0.6 | | Id: 2/6 |

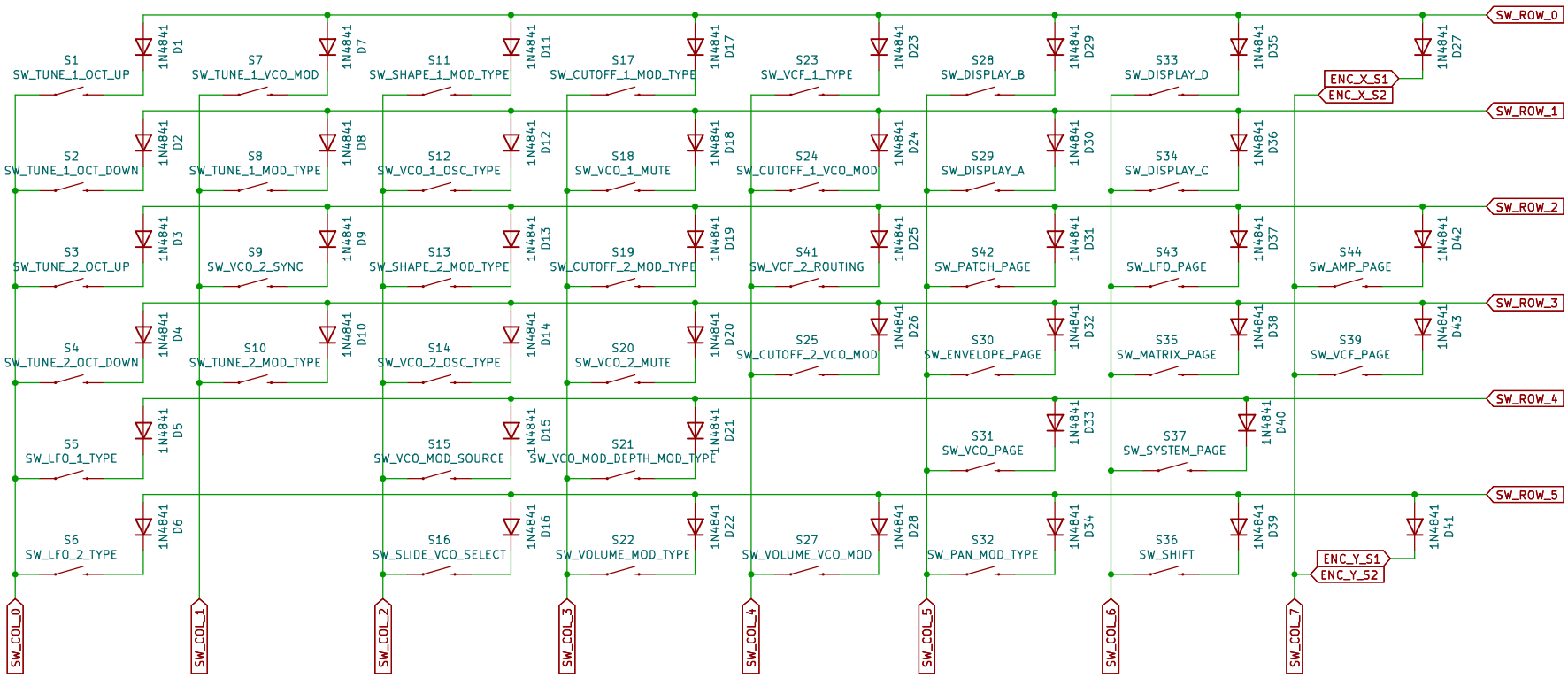


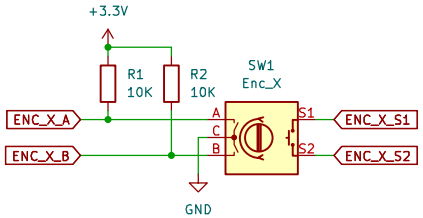


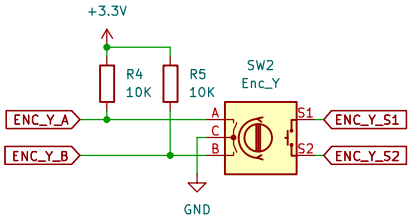


# SWITCHES

Sheet: /Switches/
File: Switches.kicad_sch

**Title:**

| Size: A4 | Date: | Rev: |
|---|---|---|
| KiCad E.D.A. 9.0.6 | | Id: 3/6 |

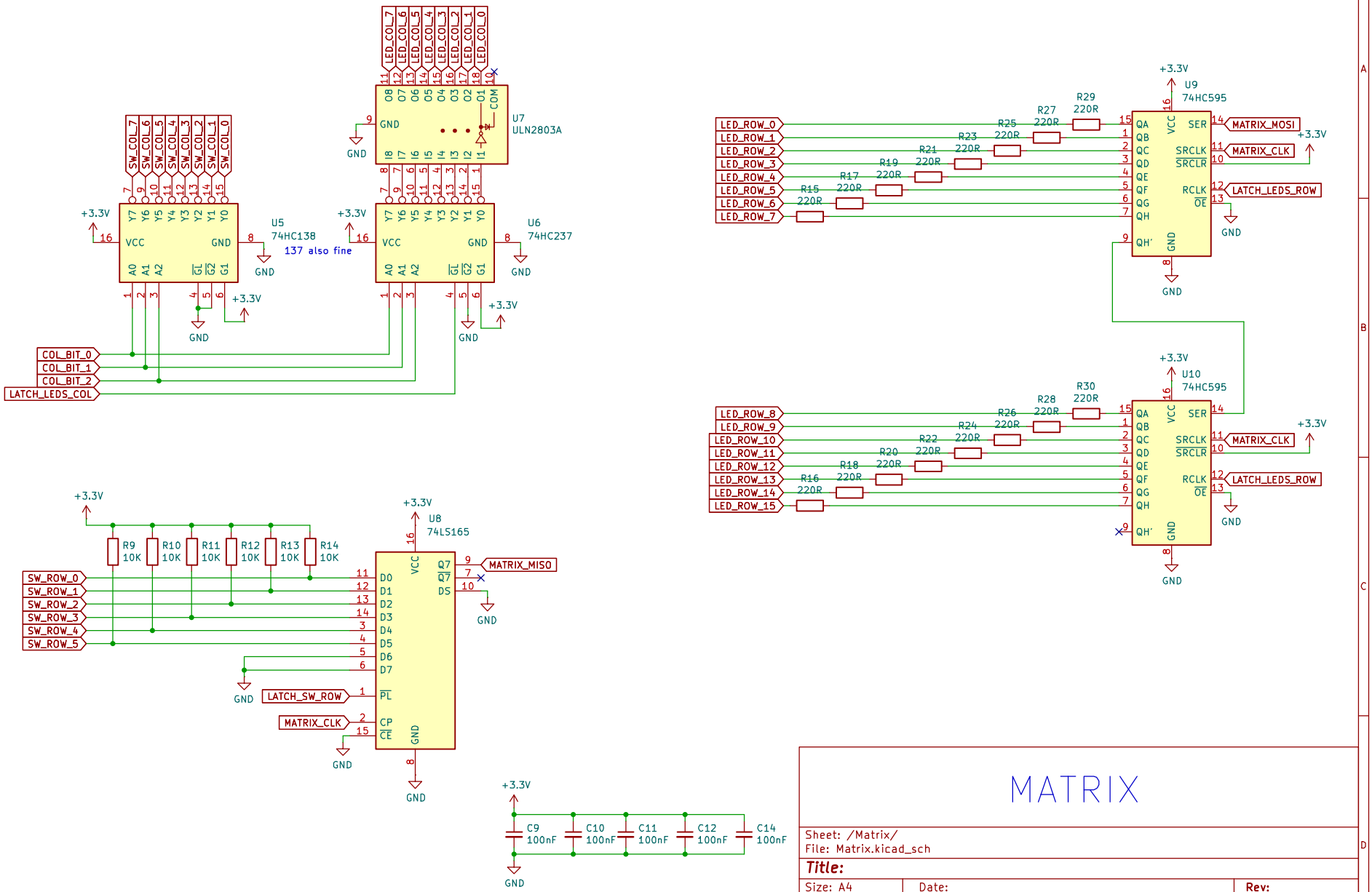


# MATRIX

Sheet: /Matrix/
File: Matrix.kicad_sch

**Title:**

| Size: A4 | Date: | Rev: |
|---|---|---|
| KiCad E.D.A. 9.0.6 | | Id: 4/6 |

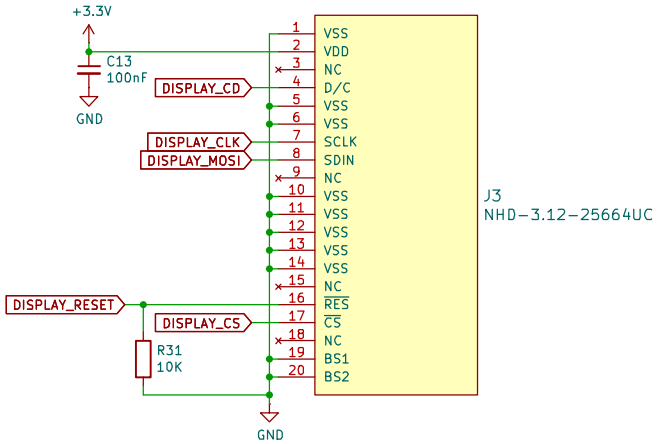


# DISPLAY

Sheet: /Display/
File: Display.kicad_sch

**Title:**

| Size: A4 | Date: | **Rev:** |
|---|---|---|
| KiCad E.D.A. 9.0.6 | | Id: 5/6 |

# LEDS

Sheet: /Leds/
File: Leds.kicad_sch

**Title:**

| Size: User | Date: | Rev: |
|---|---|---|
| KiCad E.D.A. 9.0.6 | | Id: 6/6 |