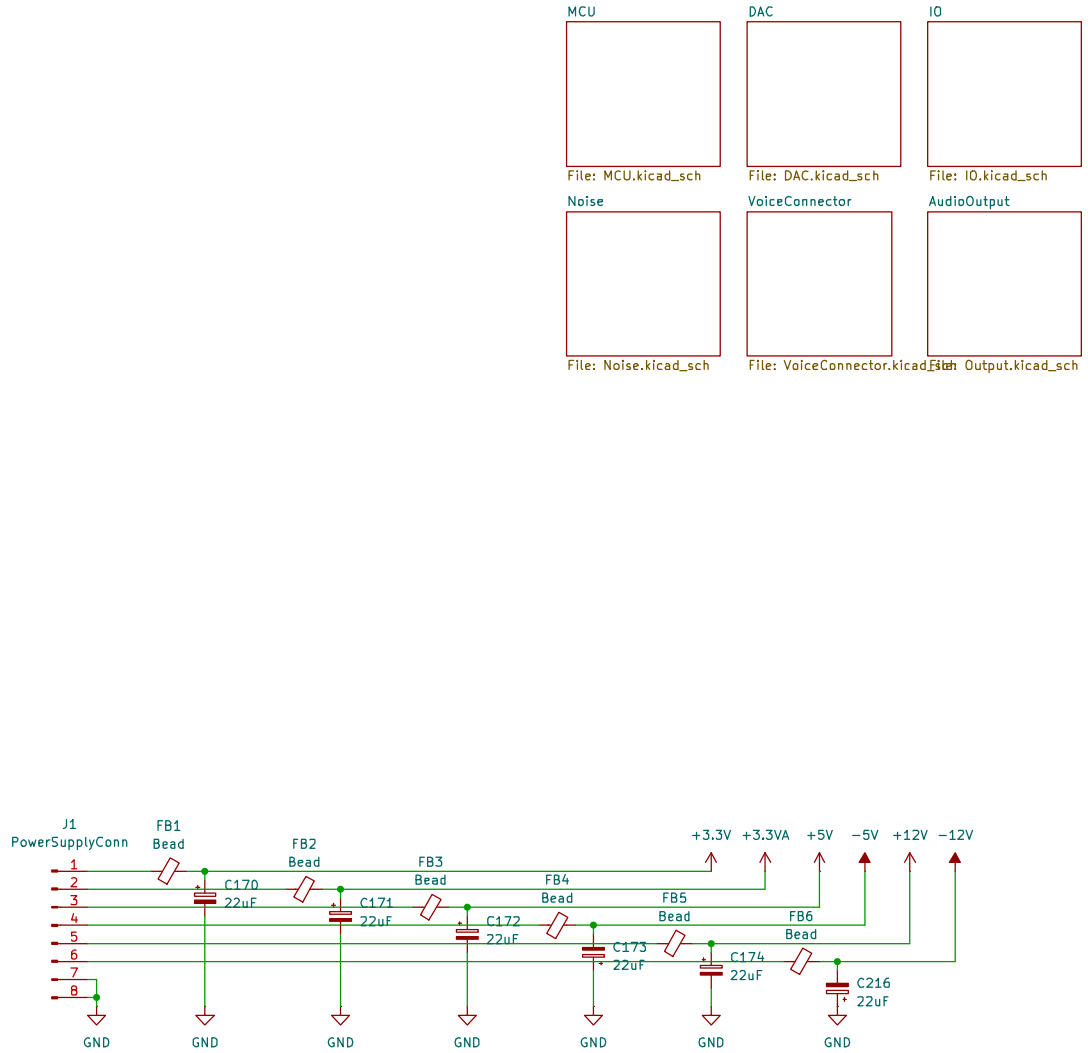

POLYSYNTH

Sheet: /
File: polySynth.kicad_sch

Title:

Size: A4	Date:	**Rev:**
KiCad E.D.A. 9.0.6		Id: 1/27

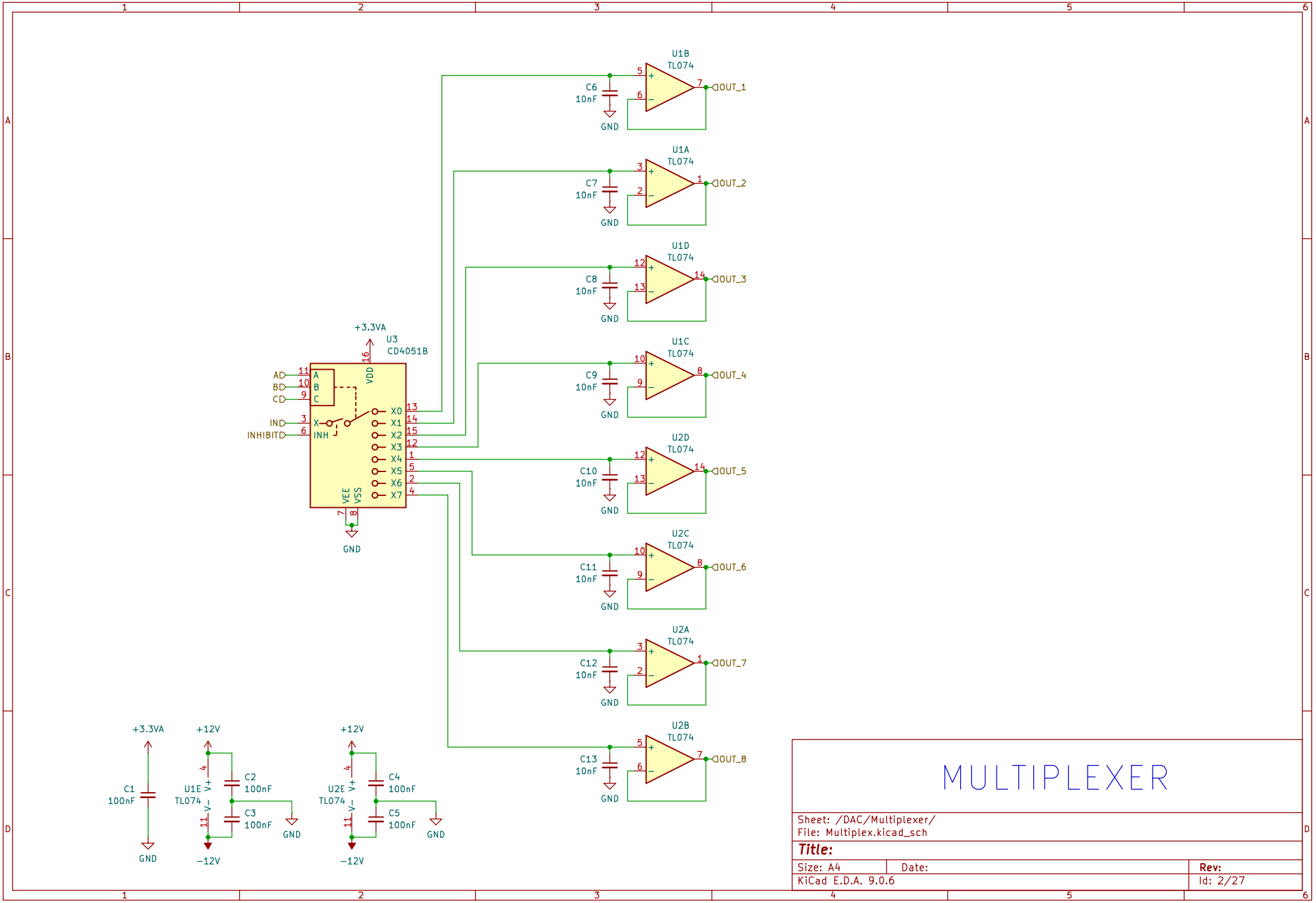

MULTIPLEXER

Sheet: /DAC/Multiplexer/
File: Multiplex.kicad_sch

Title:

Size: A4	Date:	Rev:
KiCad E.D.A. 9.0.6		Id: 2/27

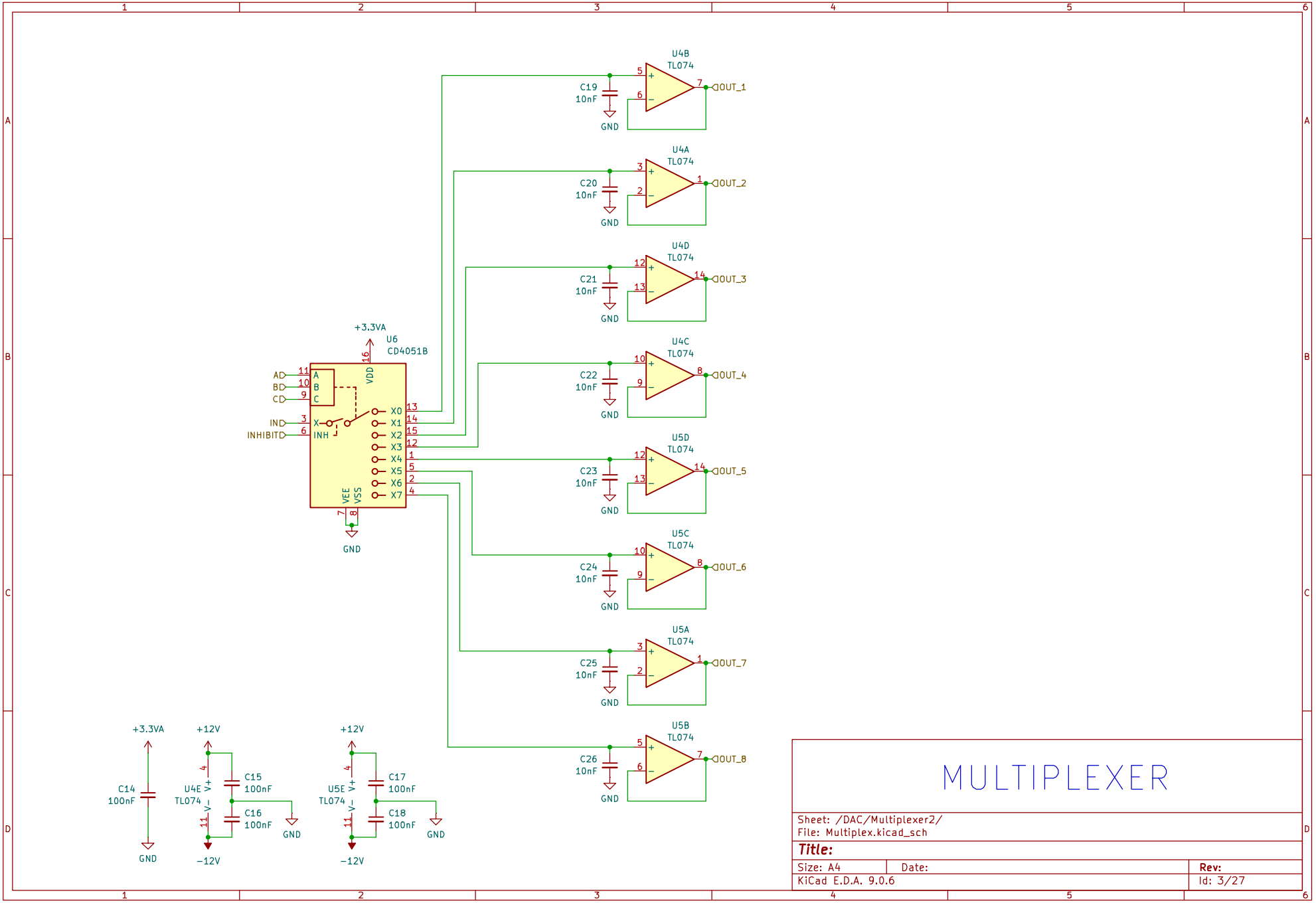
U6
CD4051B
+3.3VA
VDD
VEE
VSS
GND
A
B
C
IN
INHIBIT
X
INH
X0
X1
X2
X3
X4
X5
X6
X7
U4B
U4A
U4D
U4C
U5D
U5C
U5A
U5B
TL074
C19
C20
C21
C22
C23
C24
C25
C26
10nF
OUT_1
OUT_2
OUT_3
OUT_4
OUT_5
OUT_6
OUT_7
OUT_8
C14
100nF
+12V
-12V
U4E
U5E
V+
V-
C15
C16
C17
C18
MULTIPLEXER
Sheet: /DAC/Multiplexer2/
File: Multiplex.kicad_sch
Title:
Size: A4
Date:
Rev:
KiCad E.D.A. 9.0.6
Id: 3/27

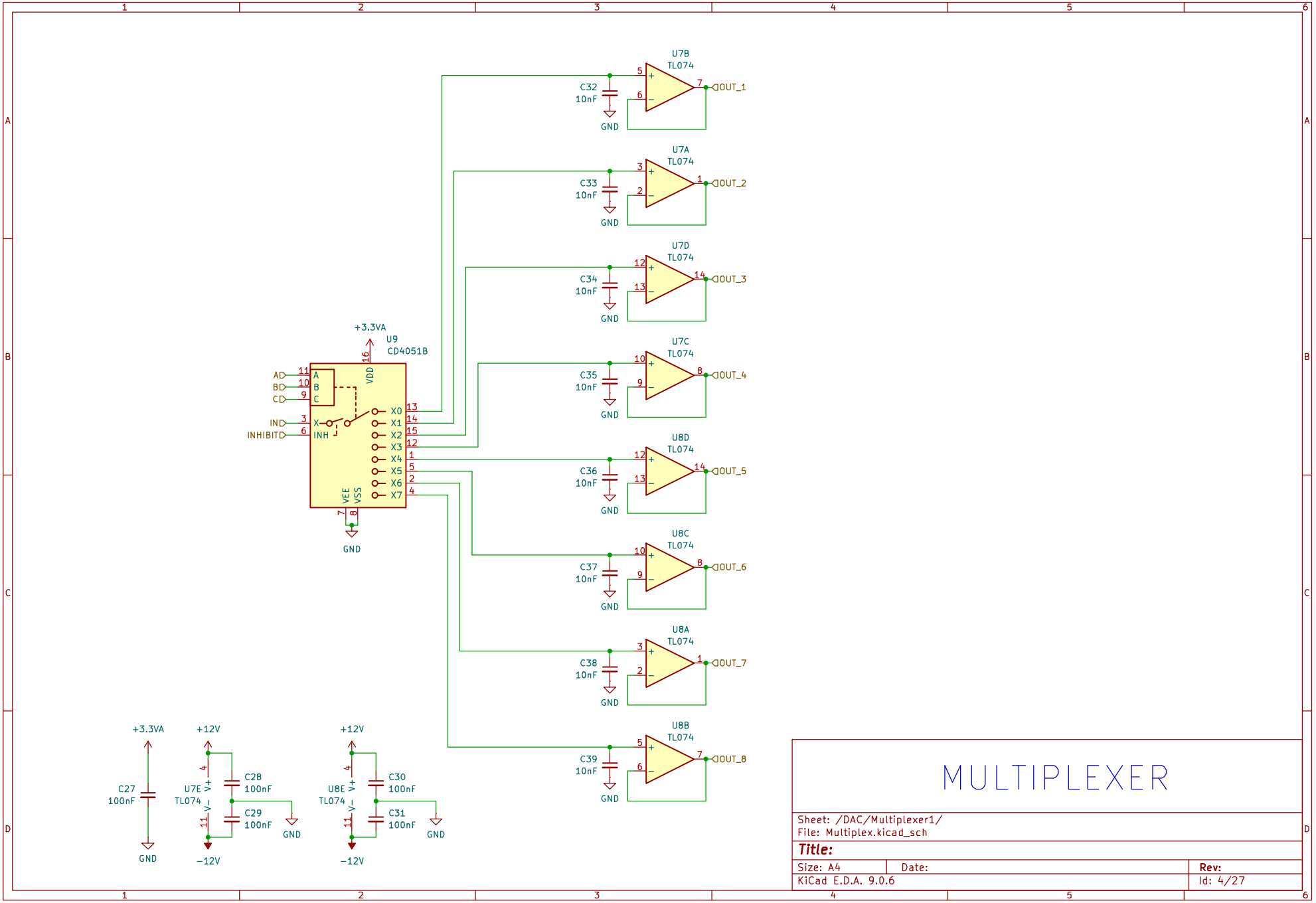
U9
CD4051B
+3.3VA
VDD
VEE
VSS
A
B
C
X
INH
AD
BD
CD
ID
INHIBIT
X0
X1
X2
X3
X4
X5
X6
X7
GND
U7B
TL074
U7A
TL074
U7D
TL074
U7C
TL074
U8D
TL074
U8C
TL074
U8A
TL074
U8B
TL074
C32
10nF
C33
10nF
C34
10nF
C35
10nF
C36
10nF
C37
10nF
C38
10nF
C39
10nF
OUT_1
OUT_2
OUT_3
OUT_4
OUT_5
OUT_6
OUT_7
OUT_8
+3.3VA
C27
100nF
+12V
U7E
TL074
V+
V-
C28
100nF
C29
100nF
-12V
+12V
U8E
TL074
C30
100nF
C31
100nF
-12V
MULTIPLEXER
Sheet: /DAC/Multiplexer1/
File: Multiplex.kicad_sch
Title:
Size: A4
Date:
Rev:
KiCad E.D.A. 9.0.6
Id: 4/27

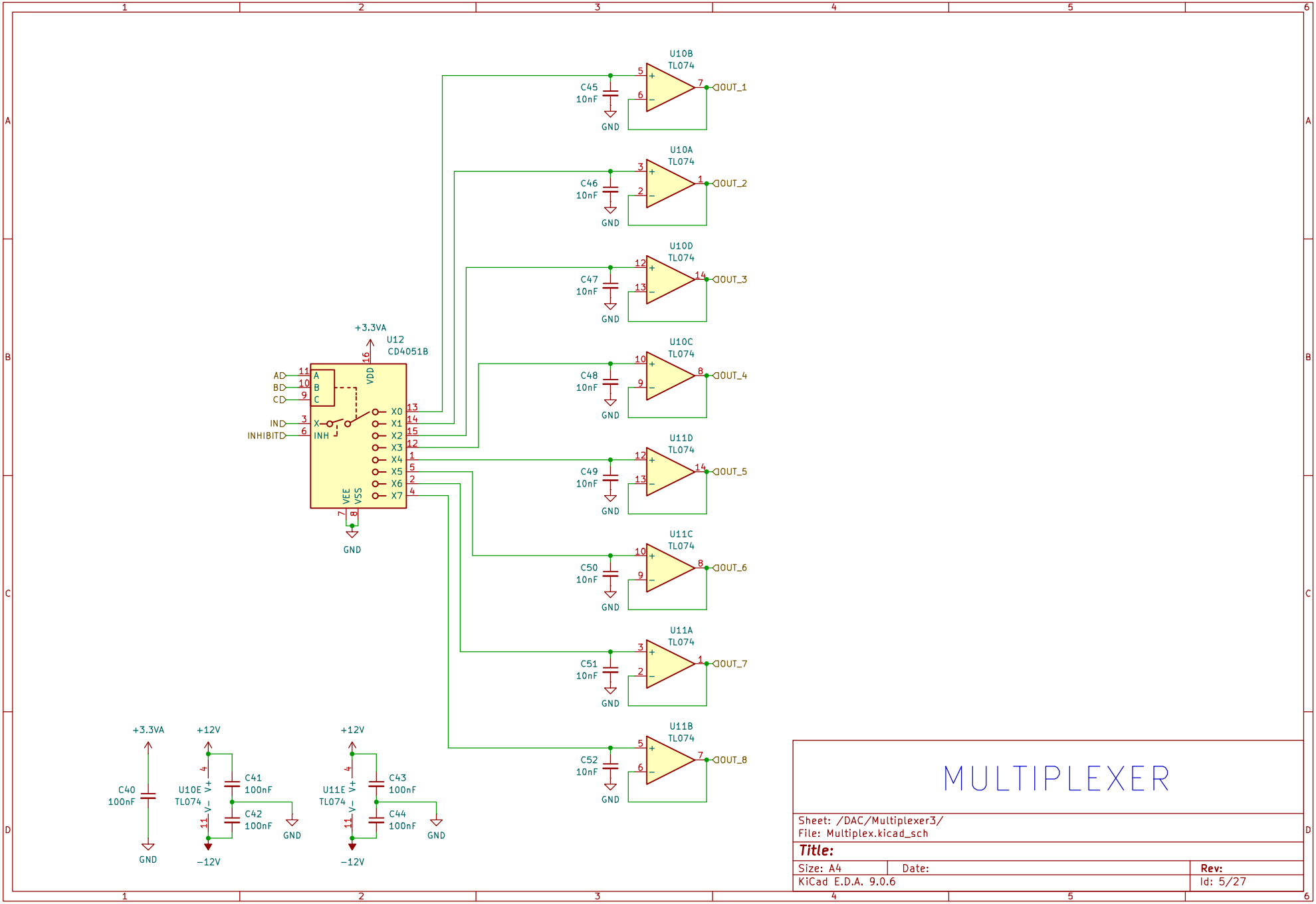
U12
CD4051B
+3.3VA
VDD
A
B
C
X
INH
VEE
VSS
X0
X1
X2
X3
X4
X5
X6
X7
GND
U10B
TL074
U10A
TL074
U10D
TL074
U10C
TL074
U11D
TL074
U11C
TL074
U11A
TL074
U11B
TL074
C45
10nF
C46
10nF
C47
10nF
C48
10nF
C49
10nF
C50
10nF
C51
10nF
C52
10nF
OUT_1
OUT_2
OUT_3
OUT_4
OUT_5
OUT_6
OUT_7
OUT_8
C40
100nF
+12V
-12V
U10E
TL074
U11E
TL074
C41
100nF
C42
100nF
C43
100nF
C44
100nF
MULTIPLEXER
Sheet: /DAC/Multiplexer3/
File: Multiplex.kicad_sch
Title:
Size: A4
Date:
Rev:
KiCad E.D.A. 9.0.6
Id: 5/27

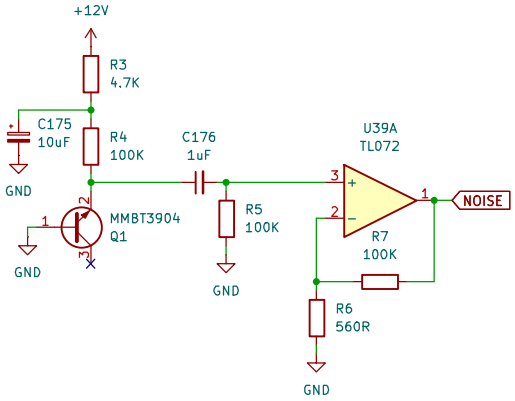

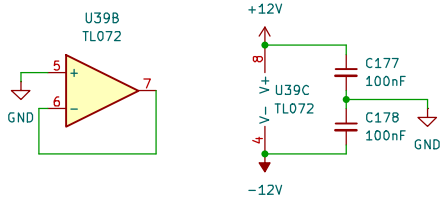

NOISE

Sheet: /Noise/
File: Noise.kicad_sch

Title:

Size: A4	Date:	Rev:
KiCad E.D.A. 9.0.6		Id: 6/27

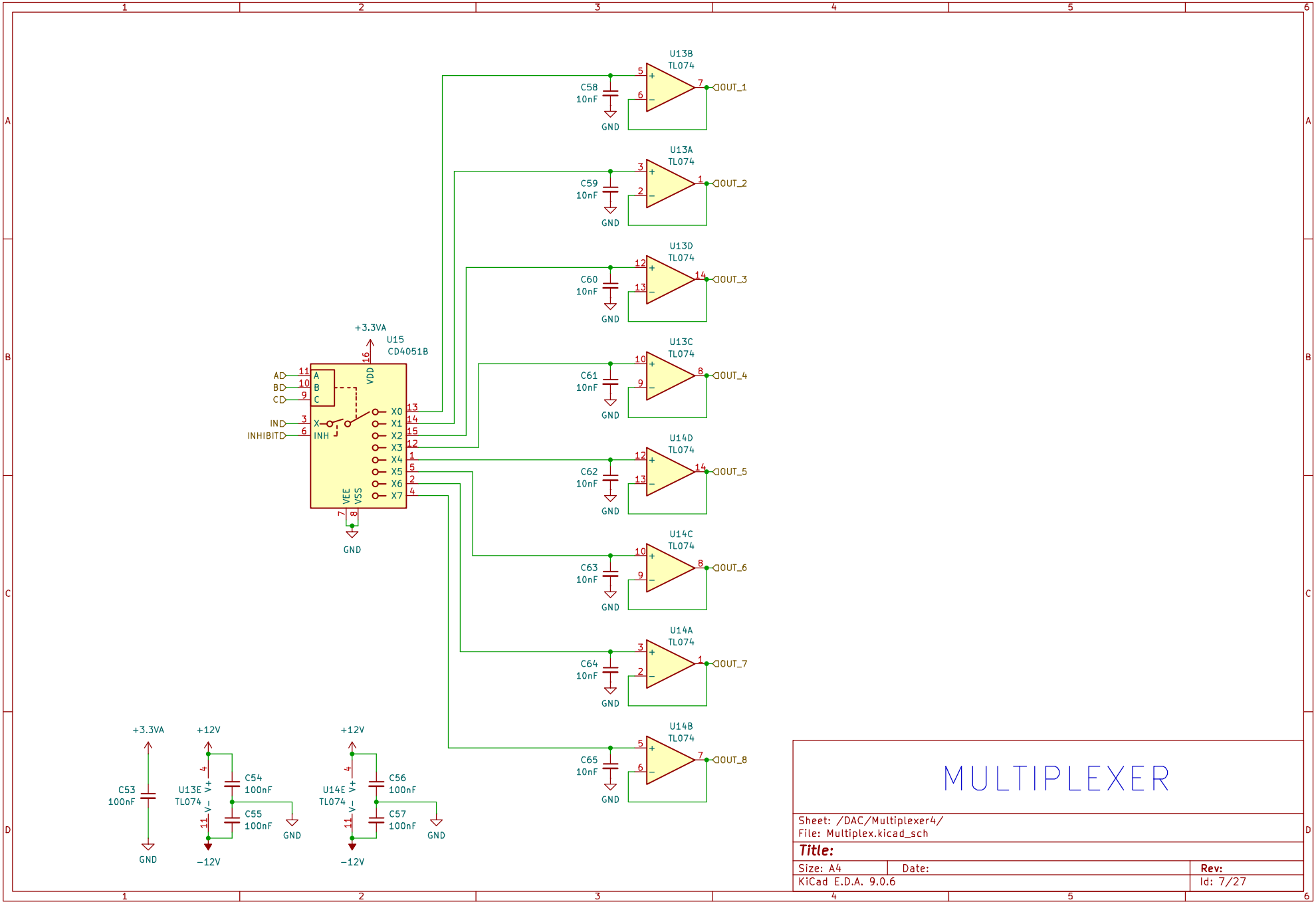
U15
CD4051B
+3.3VA
VDD
A
B
C
X
INH
VEE
VSS
X0
X1
X2
X3
X4
X5
X6
X7
AD
BD
CD
IND
INHIBITD
GND
U13B
U13A
U13D
U13C
U14D
U14C
U14A
U14B
TL074
C58
C59
C60
C61
C62
C63
C64
C65
10nF
OUT_1
OUT_2
OUT_3
OUT_4
OUT_5
OUT_6
OUT_7
OUT_8
C53
100nF
+12V
-12V
U13E
U14E
C54
C55
C56
C57
MULTIPLEXER
Sheet: /DAC/Multiplexer4/
File: Multiplex.kicad_sch
Title:
Size: A4
Date:
Rev:
KiCad E.D.A. 9.0.6
Id: 7/27

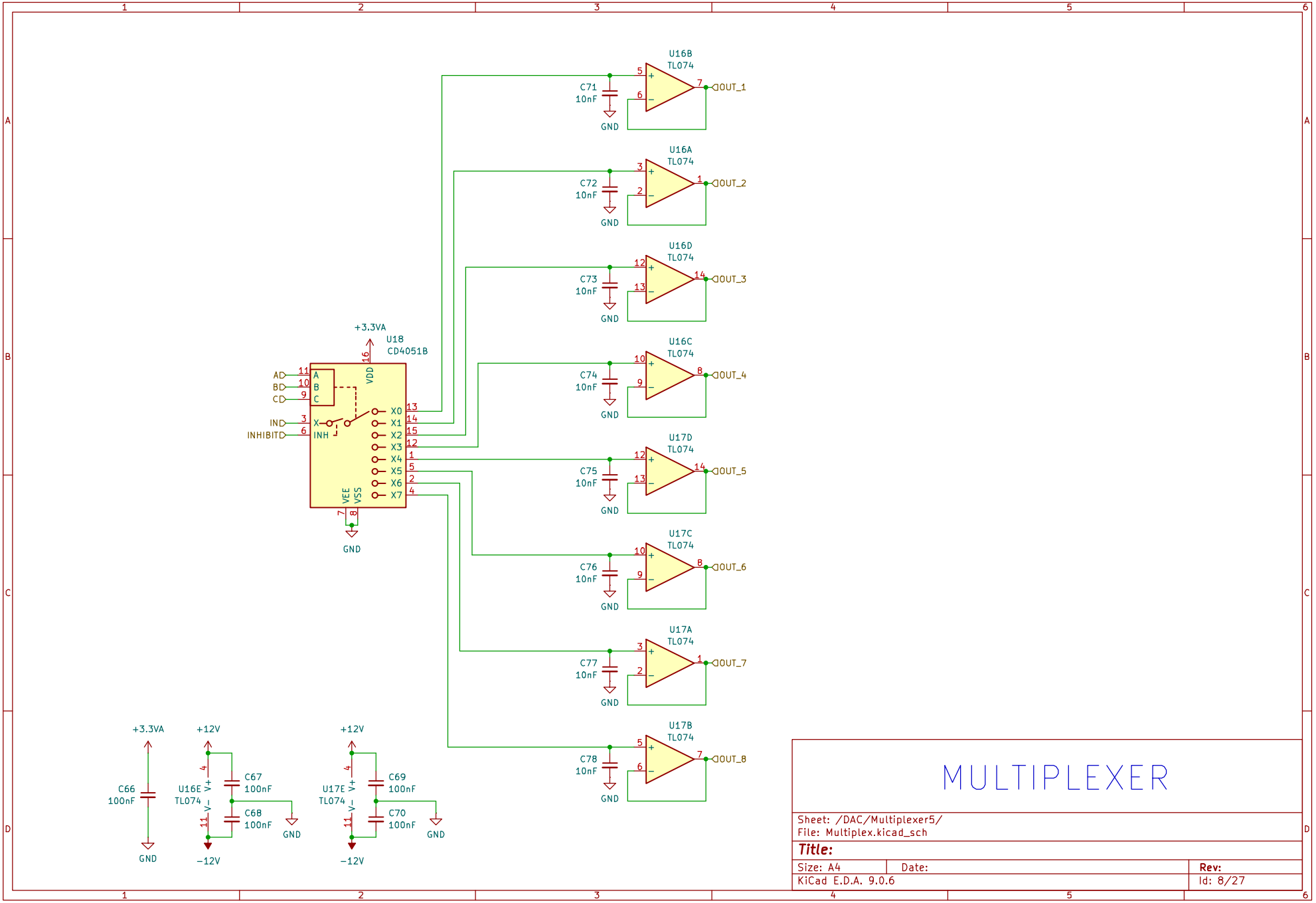
U18
CD4051B
+3.3VA
VDD
VEE
VSS
GND
A
B
C
X
INH
AD
BD
CD
ID
INHIBIT
X0
X1
X2
X3
X4
X5
X6
X7
U16B
TL074
U16A
TL074
U16D
TL074
U16C
TL074
U17D
TL074
U17C
TL074
U17A
TL074
U17B
TL074
C71
10nF
C72
10nF
C73
10nF
C74
10nF
C75
10nF
C76
10nF
C77
10nF
C78
10nF
OUT_1
OUT_2
OUT_3
OUT_4
OUT_5
OUT_6
OUT_7
OUT_8
C66
100nF
+12V
-12V
U16E
TL074
U17E
TL074
C67
100nF
C68
100nF
C69
100nF
C70
100nF
MULTIPLEXER
Sheet: /DAC/Multiplexer5/
File: Multiplex.kicad_sch
Title:
Size: A4
Date:
Rev:
KiCad E.D.A. 9.0.6
Id: 8/27

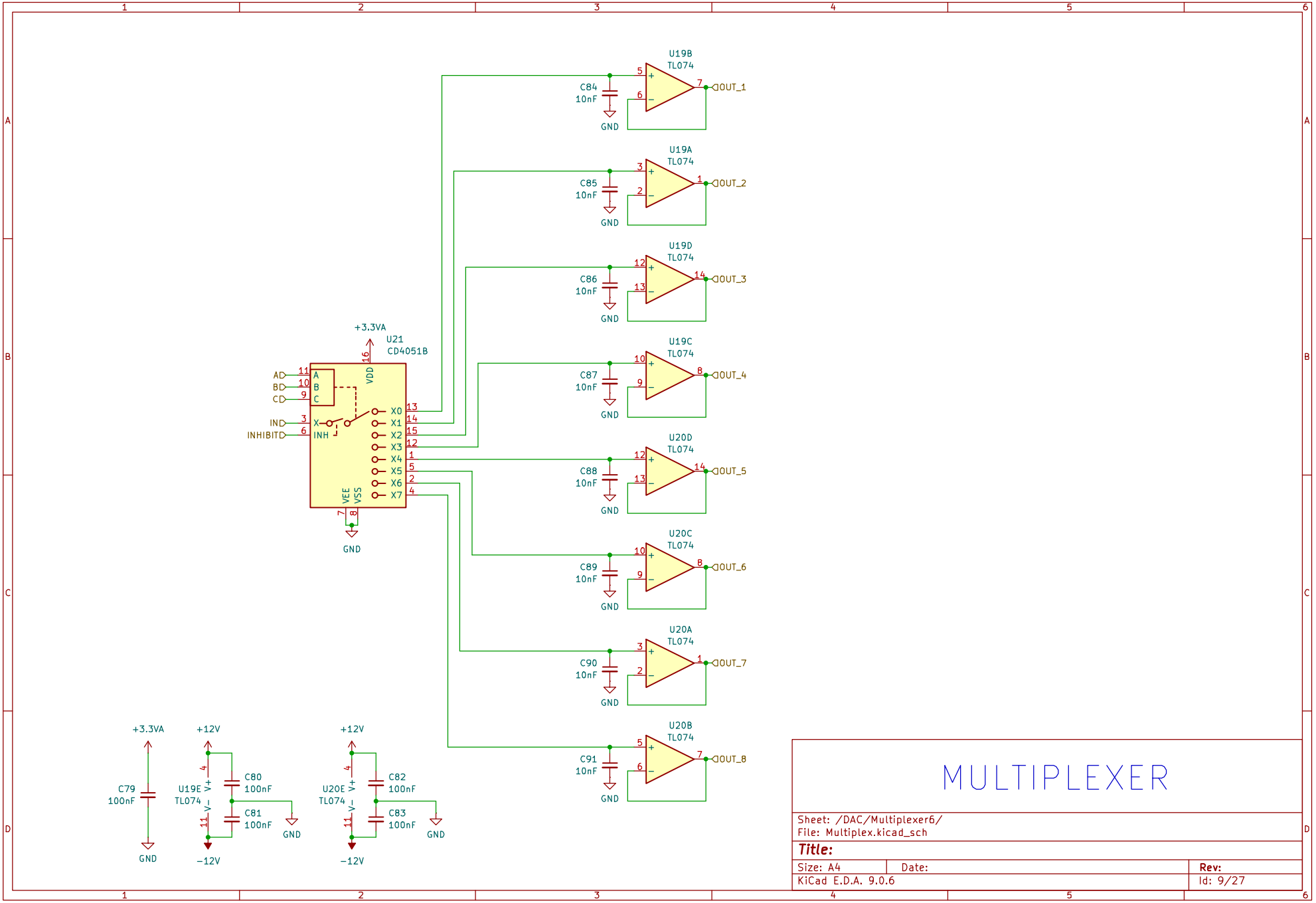
U21
CD4051B
+3.3VA
VDD
VEE
VSS
A
B
C
X
INH
X0
X1
X2
X3
X4
X5
X6
X7
AD
BD
CD
ID
INHIBIT
GND
U19B
TL074
U19A
TL074
U19D
TL074
U19C
TL074
U20D
TL074
U20C
TL074
U20A
TL074
U20B
TL074
C84
10nF
C85
10nF
C86
10nF
C87
10nF
C88
10nF
C89
10nF
C90
10nF
C91
10nF
OUT_1
OUT_2
OUT_3
OUT_4
OUT_5
OUT_6
OUT_7
OUT_8
C79
100nF
+12V
-12V
U19E
TL074
U20E
TL074
V+
V-
C80
100nF
C81
100nF
C82
100nF
C83
100nF
MULTIPLEXER
Sheet: /DAC/Multiplexer6/
File: Multiplex.kicad_sch
Title:
Size: A4
Date:
Rev:
KiCad E.D.A. 9.0.6
Id: 9/27

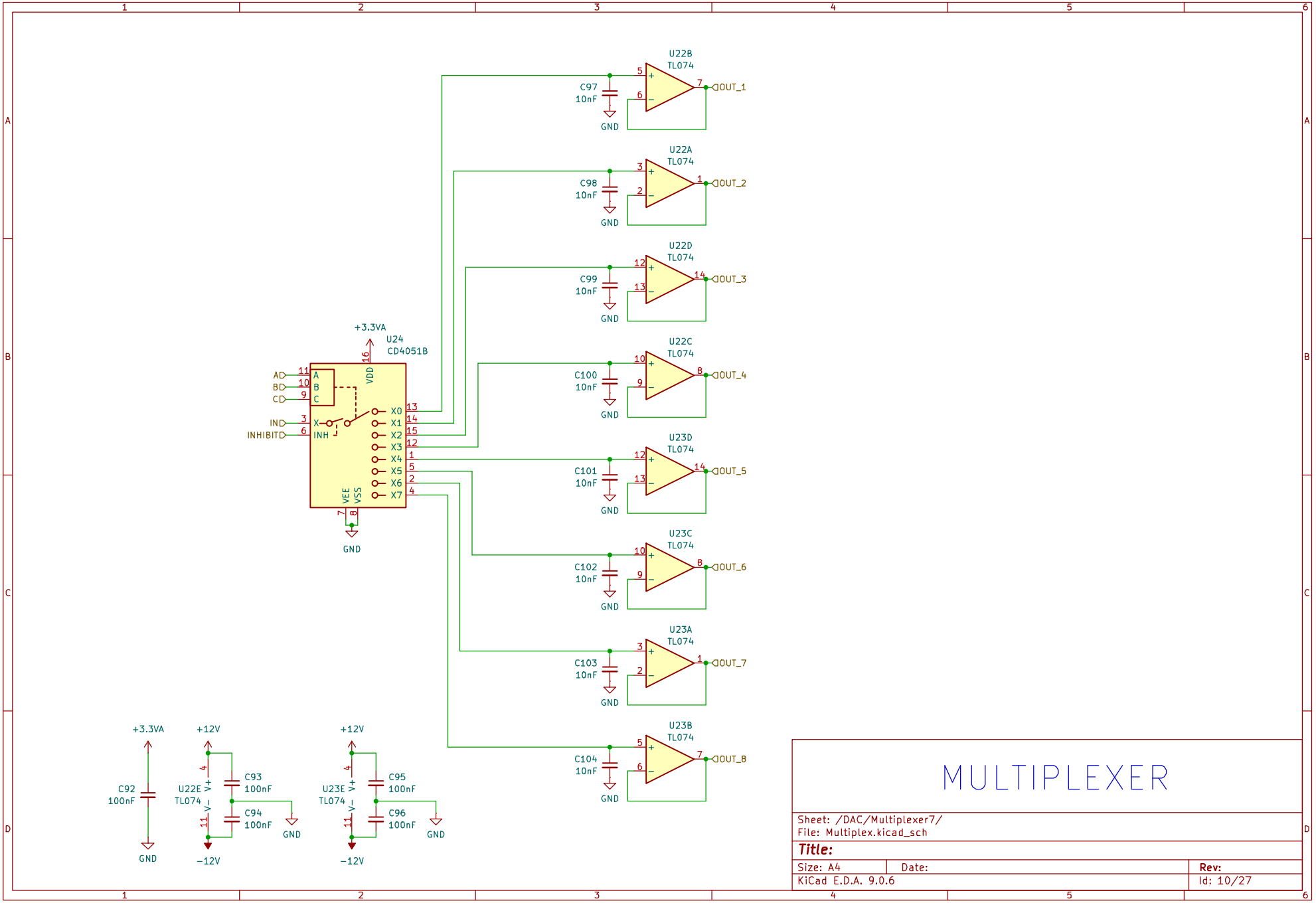
U22B
TL074
C97
10nF
GND
OUT_1
U22A
TL074
C98
10nF
GND
OUT_2
U22D
TL074
C99
10nF
GND
OUT_3
U22C
TL074
C100
10nF
GND
OUT_4
U23D
TL074
C101
10nF
GND
OUT_5
U23C
TL074
C102
10nF
GND
OUT_6
U23A
TL074
C103
10nF
GND
OUT_7
U23B
TL074
C104
10nF
GND
OUT_8
+3.3VA
U24
CD4051B
VDD
A
B
C
X
INH
VEE
VSS
X0
X1
X2
X3
X4
X5
X6
X7
AD
BD
CD
ID
INHIBITD
GND
+3.3VA
C92
100nF
GND
+12V
U22E
TL074
V+
V−
C93
100nF
C94
100nF
GND
−12V
+12V
U23E
TL074
V+
V−
C95
100nF
C96
100nF
GND
−12V
MULTIPLEXER
Sheet: /DAC/Multiplexer7/
File: Multiplex.kicad_sch
Title:
Size: A4
Date:
Rev:
KiCad E.D.A. 9.0.6
Id: 10/27

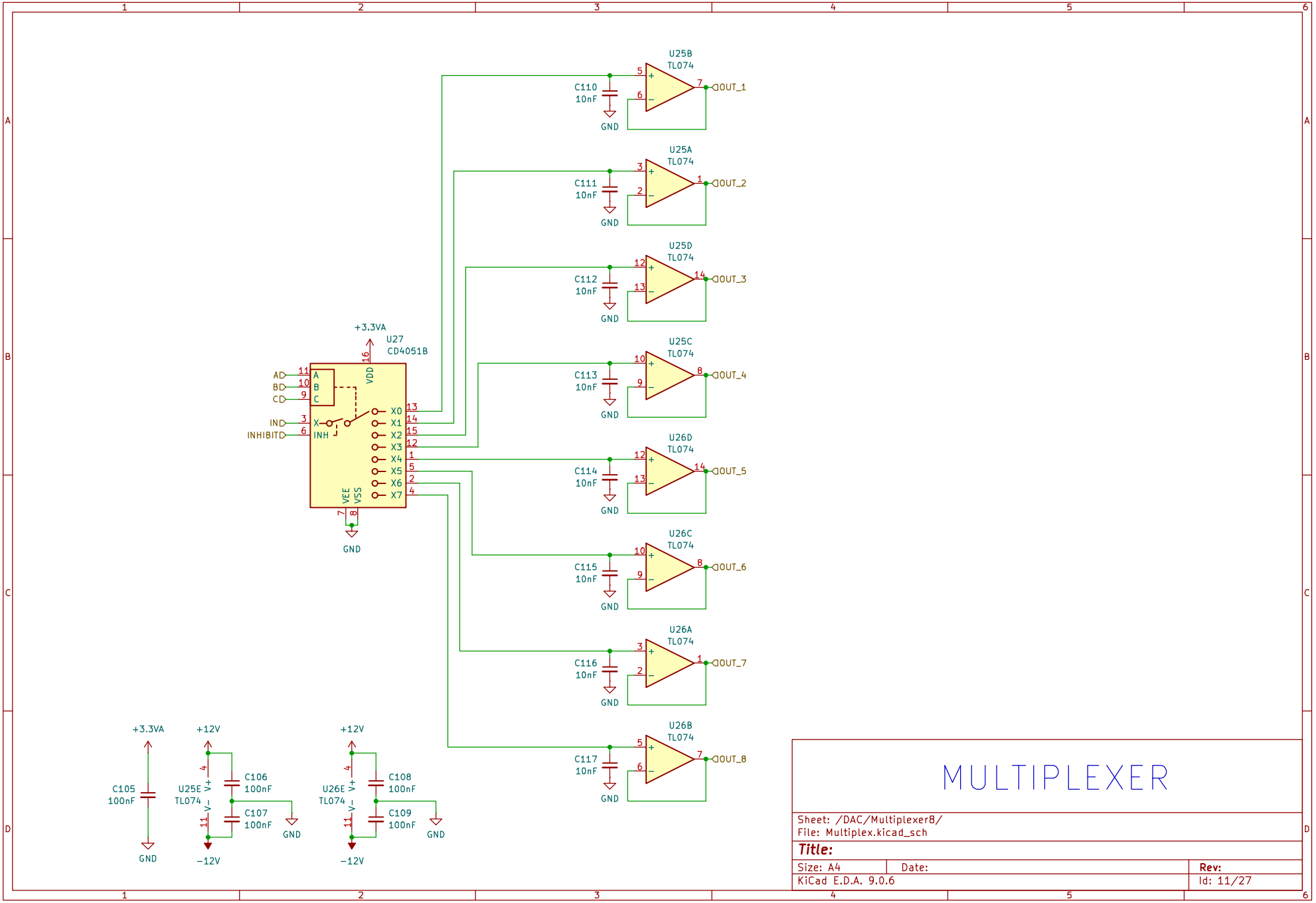
U27
CD4051B
+3.3VA
VDD
VEE
VSS
A
B
C
X
INH
X0
X1
X2
X3
X4
X5
X6
X7
AD
BD
CD
ID
INHIBITD
GND
U25B
U25A
U25D
U25C
U26D
U26C
U26A
U26B
TL074
C110
C111
C112
C113
C114
C115
C116
C117
10nF
OUT_1
OUT_2
OUT_3
OUT_4
OUT_5
OUT_6
OUT_7
OUT_8
+12V
-12V
U25E
U26E
C105
100nF
C106
C107
C108
C109
MULTIPLEXER
Sheet: /DAC/Multiplexer8/
File: Multiplex.kicad_sch
Title:
Size: A4
Date:
Rev:
KiCad E.D.A. 9.0.6
Id: 11/27

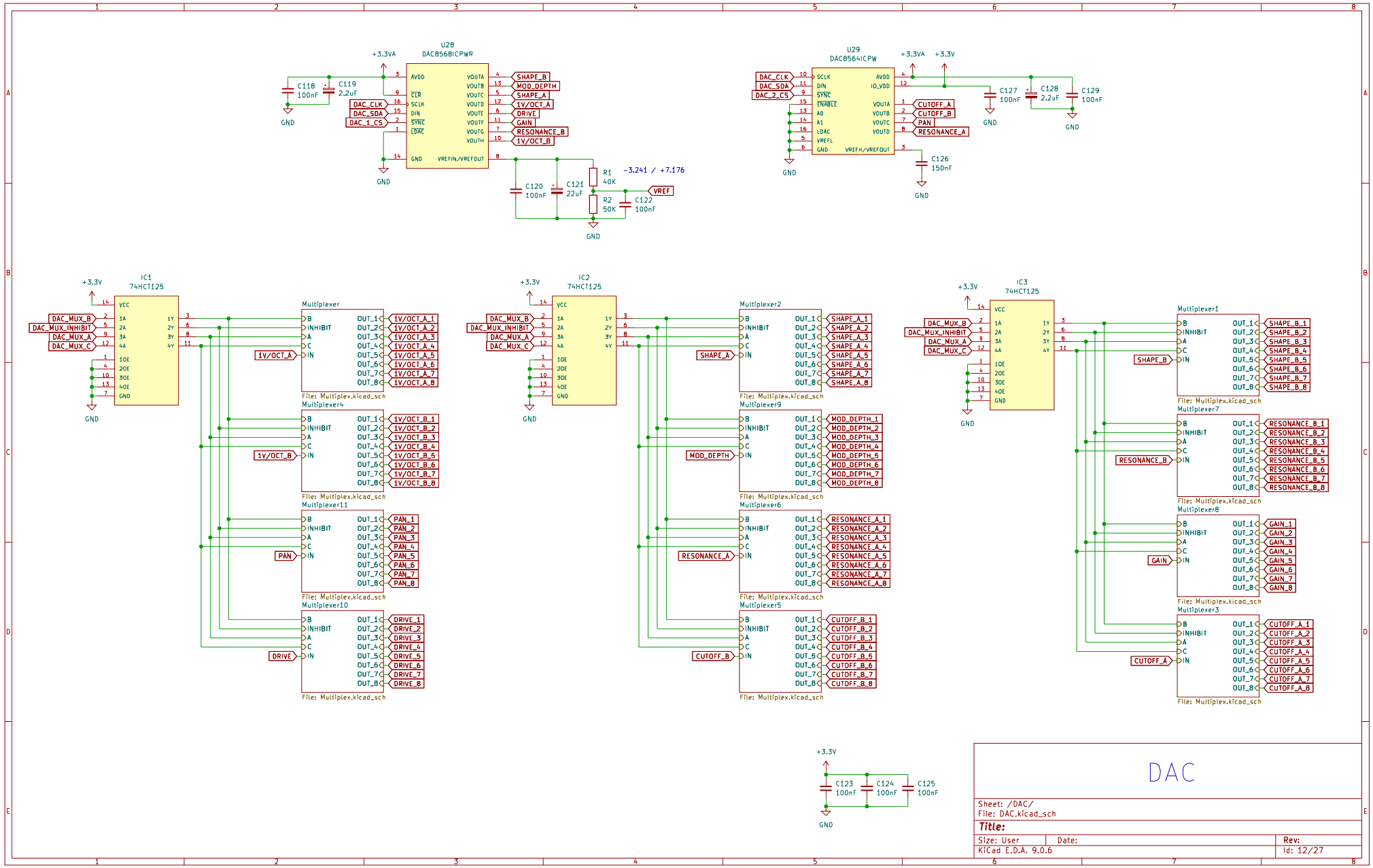
U28
DAC8568ICPWR
+3.3VA
C118 100nF
C119 2.2uF
GND
DAC_CLK
DAC_SDA
DAC_1_CS
AVDD
CLR
SCLK
DIN
SYNC
LDAC
GND
VREFIN/VREFOUT
VOUTA
VOUTB
VOUTC
VOUTD
VOUTE
VOUTF
VOUTG
VOUTH
SHAPE_B
MOD_DEPTH
SHAPE_A
1V/OCT_A
DRIVE
GAIN
RESONANCE_B
1V/OCT_B
C120 100nF
C121 22uF
R1 40K
R2 50K
C122 100nF
-3.241 / +7.176
VREF
U29
DAC8564ICPW
+3.3VA
+3.3V
DAC_CLK
DAC_SDA
DAC_2_CS
SCLK
DIN
SYNC
ENABLE
A0
A1
LDAC
VREFL
GND
AVDD
IO_VDD
VOUTA
VOUTB
VOUTC
VOUTD
VREFH/VREFOUT
CUTOFF_A
CUTOFF_B
PAN
RESONANCE_A
C127 100nF
C128 2.2uF
C129 100nF
C126 150nF
IC1
74HCT125
+3.3V
DAC_MUX_B
DAC_MUX_INHIBIT
DAC_MUX_A
DAC_MUX_C
VCC
1A
2A
3A
4A
1OE
2OE
3OE
4OE
GND
1Y
2Y
3Y
4Y
Multiplexer
File: Multiplex.kicad_sch
Multiplexer4
Multiplexer11
Multiplexer10
IC2
74HCT125
Multiplexer2
Multiplexer9
Multiplexer6
Multiplexer5
IC3
74HCT125
Multiplexer1
Multiplexer7
Multiplexer8
Multiplexer3
B
INHIBIT
A
C
IN
OUT_1
OUT_2
OUT_3
OUT_4
OUT_5
OUT_6
OUT_7
OUT_8
C123 100nF
C124 100nF
C125 100nF
DAC
Sheet: /DAC/
File: DAC.kicad_sch
Title:
Size: User
Date:
Rev:
KiCad E.D.A. 9.0.6
Id: 12/27

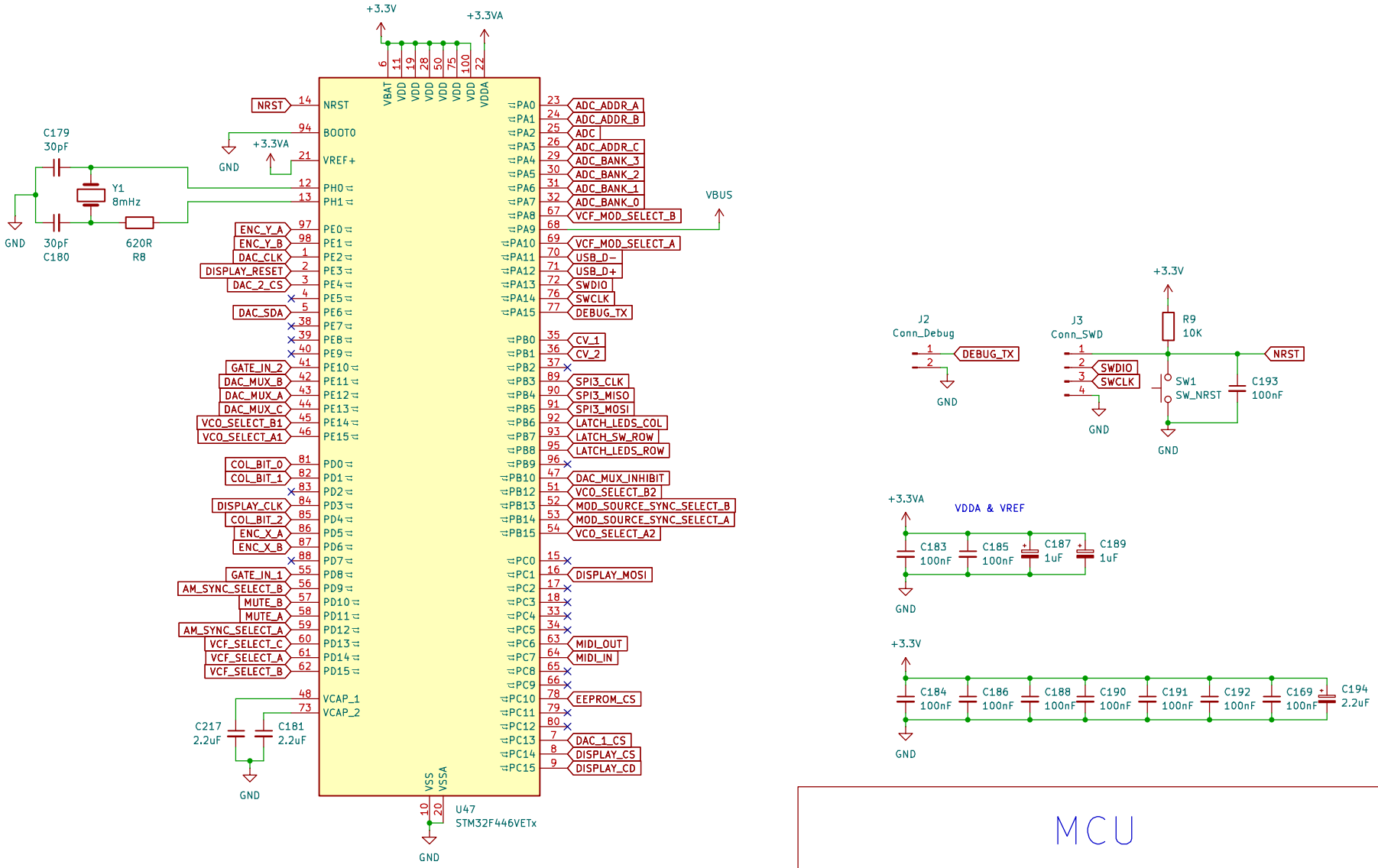

MCU

Sheet: /MCU/
File: MCU.kicad_sch

Title:

Size: A4	Date:	Rev:
KiCad E.D.A. 9.0.6		Id: 13/27

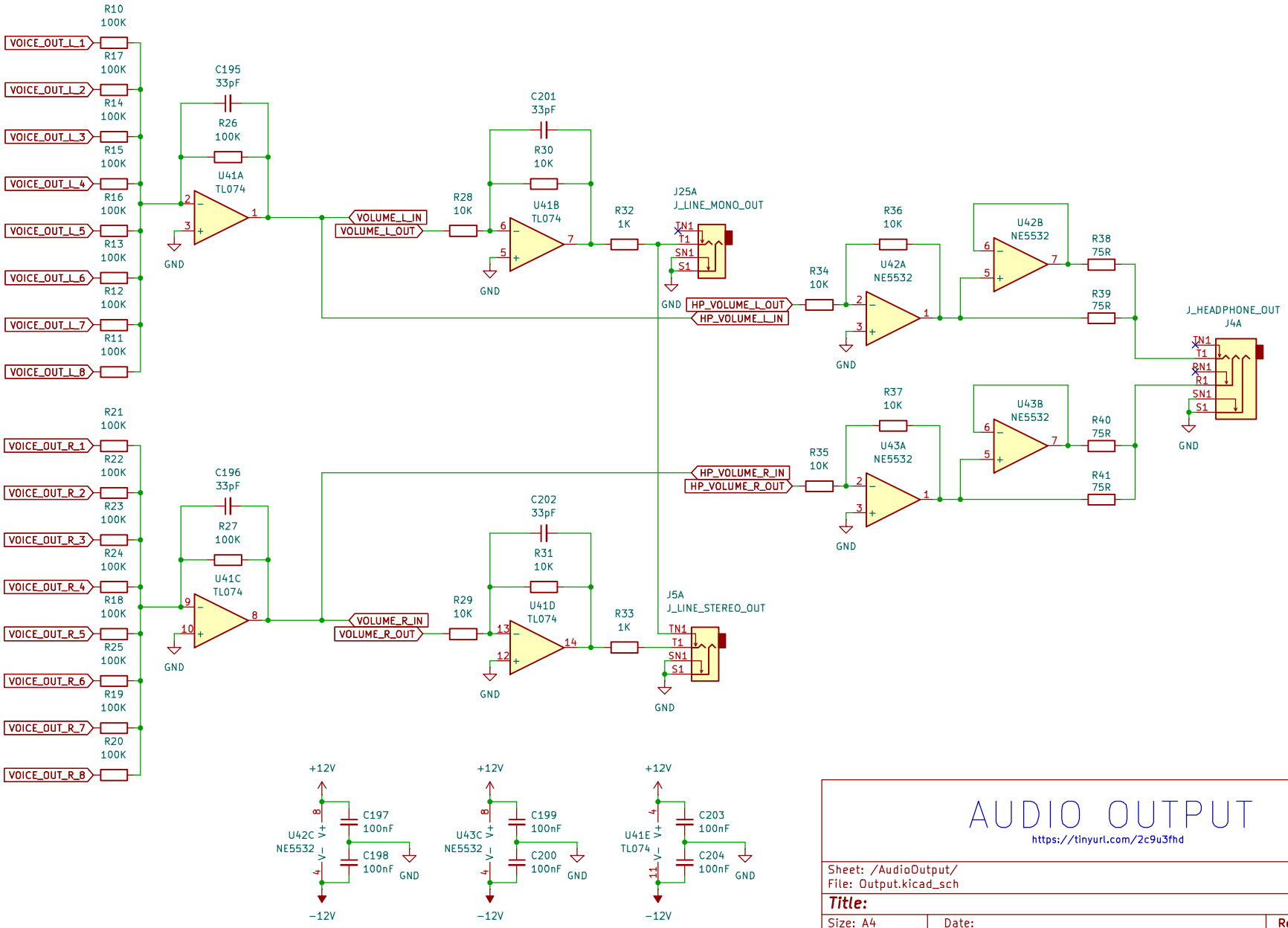

AUDIO OUTPUT

https://tinyurl.com/2c9u3fhd

Sheet: /AudioOutput/
File: Output.kicad_sch

Title:

Size: A4	Date:	Rev:
KiCad E.D.A. 9.0.6		Id: 14/27

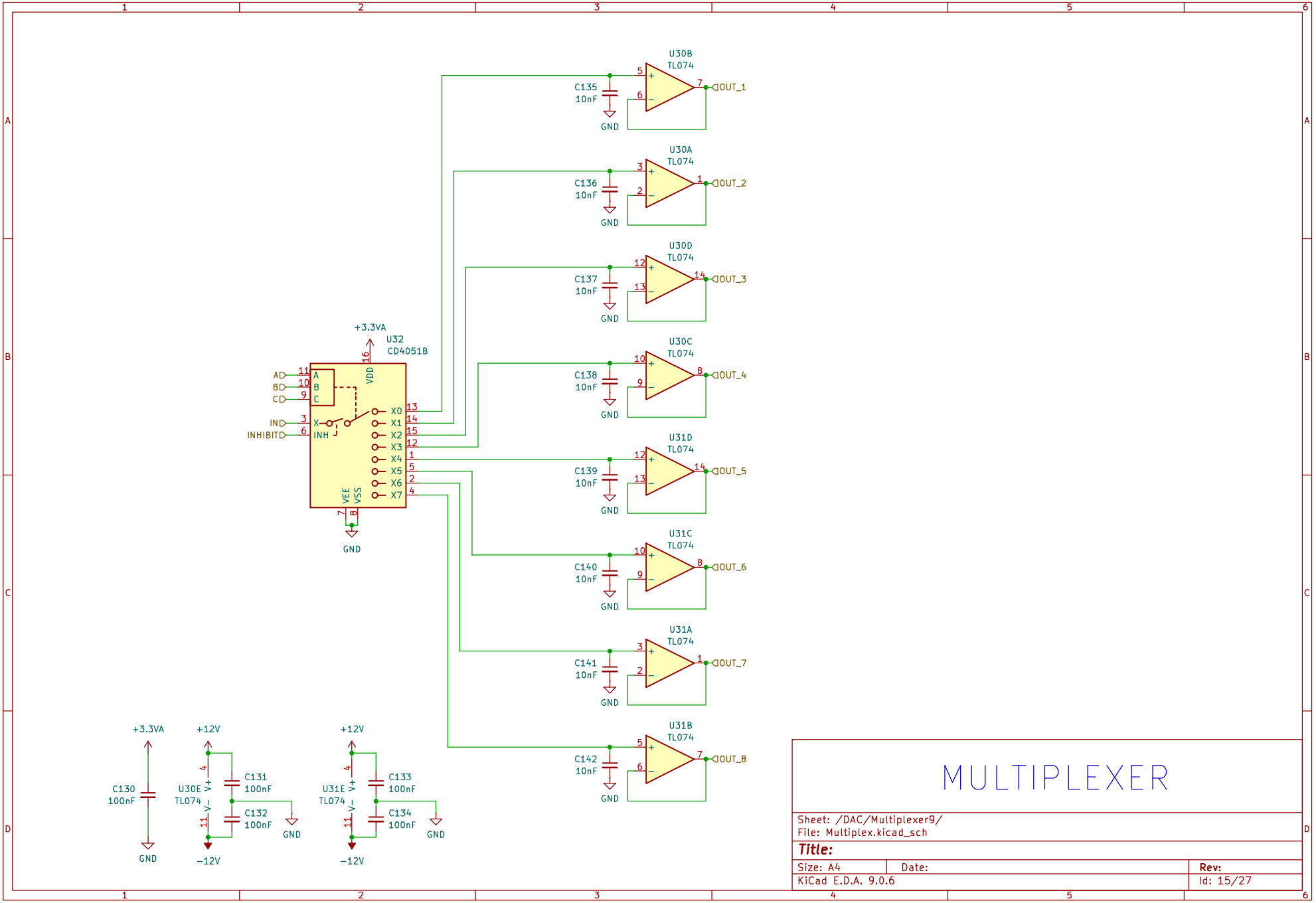
U30B
TL074
C135
10nF
GND
OUT_1
U30A
TL074
C136
10nF
GND
OUT_2
U30D
TL074
C137
10nF
GND
OUT_3
U30C
TL074
C138
10nF
GND
OUT_4
U31D
TL074
C139
10nF
GND
OUT_5
U31C
TL074
C140
10nF
GND
OUT_6
U31A
TL074
C141
10nF
GND
OUT_7
U31B
TL074
C142
10nF
GND
OUT_8
+3.3VA
U32
CD4051B
VDD
A
B
C
X
INH
VEE
VSS
X0
X1
X2
X3
X4
X5
X6
X7
AD
BD
CD
ID
INHIBITD
GND
+3.3VA
C130
100nF
GND
+12V
U30E
TL074
V+
V−
C131
100nF
C132
100nF
GND
−12V
+12V
U31E
TL074
V+
V−
C133
100nF
C134
100nF
GND
−12V
MULTIPLEXER
Sheet: /DAC/Multiplexer9/
File: Multiplex.kicad_sch
Title:
Size: A4
Date:
Rev:
KiCad E.D.A. 9.0.6
Id: 15/27

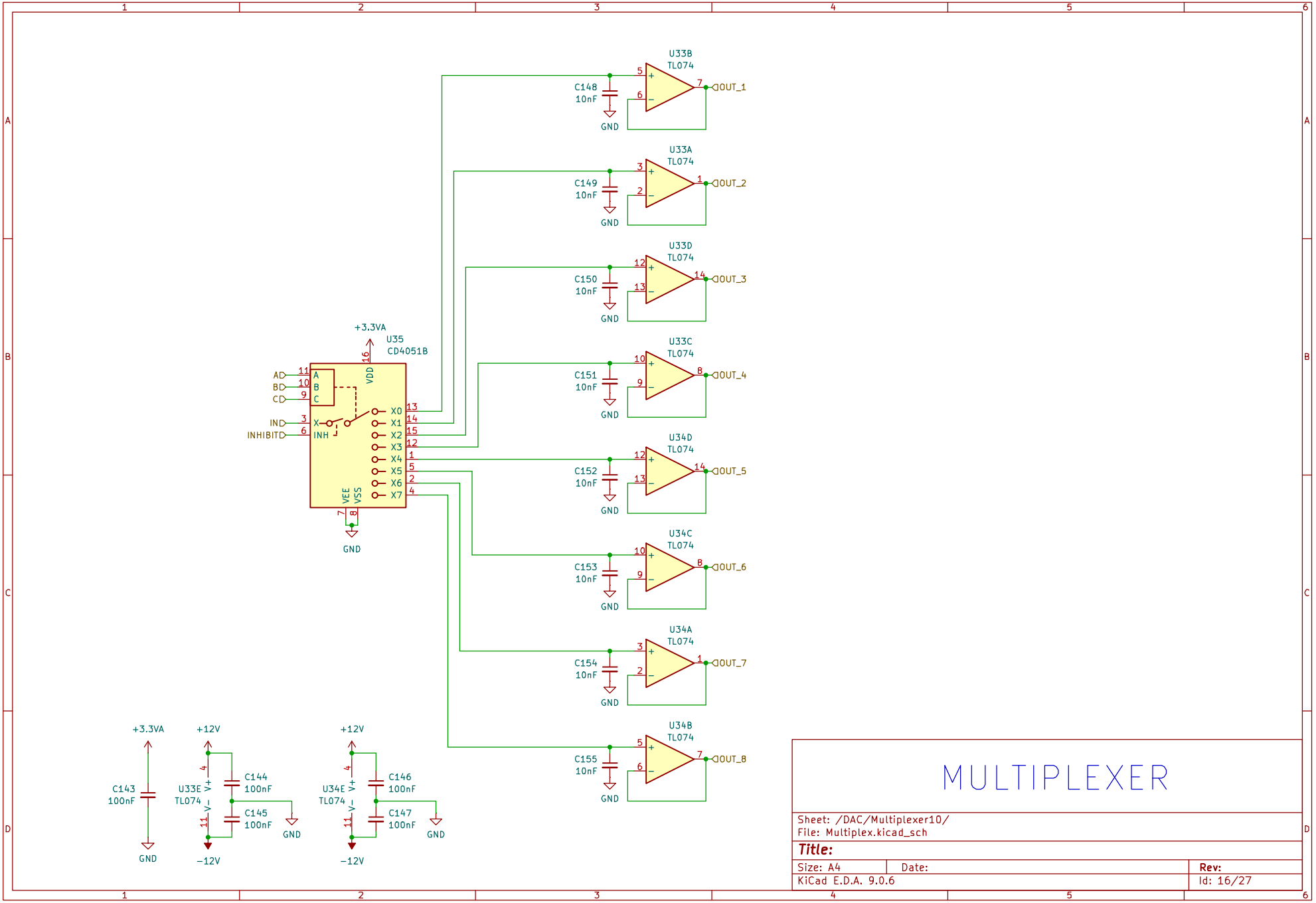
U33B
TL074
C148
10nF
GND
OUT_1
U33A
TL074
C149
10nF
GND
OUT_2
U33D
TL074
C150
10nF
GND
OUT_3
U33C
TL074
C151
10nF
GND
OUT_4
U34D
TL074
C152
10nF
GND
OUT_5
U34C
TL074
C153
10nF
GND
OUT_6
U34A
TL074
C154
10nF
GND
OUT_7
U34B
TL074
C155
10nF
GND
OUT_8
+3.3VA
U35
CD4051B
VDD
A
B
C
X
INH
VEE
VSS
X0
X1
X2
X3
X4
X5
X6
X7
AD
BD
CD
ID
INHIBITD
GND
+3.3VA
C143
100nF
GND
+12V
U33E
TL074
V+
V−
C144
100nF
C145
100nF
GND
−12V
+12V
U34E
TL074
V+
V−
C146
100nF
C147
100nF
GND
−12V
MULTIPLEXER
Sheet: /DAC/Multiplexer10/
File: Multiplex.kicad_sch
Title:
Size: A4
Date:
Rev:
KiCad E.D.A. 9.0.6
Id: 16/27

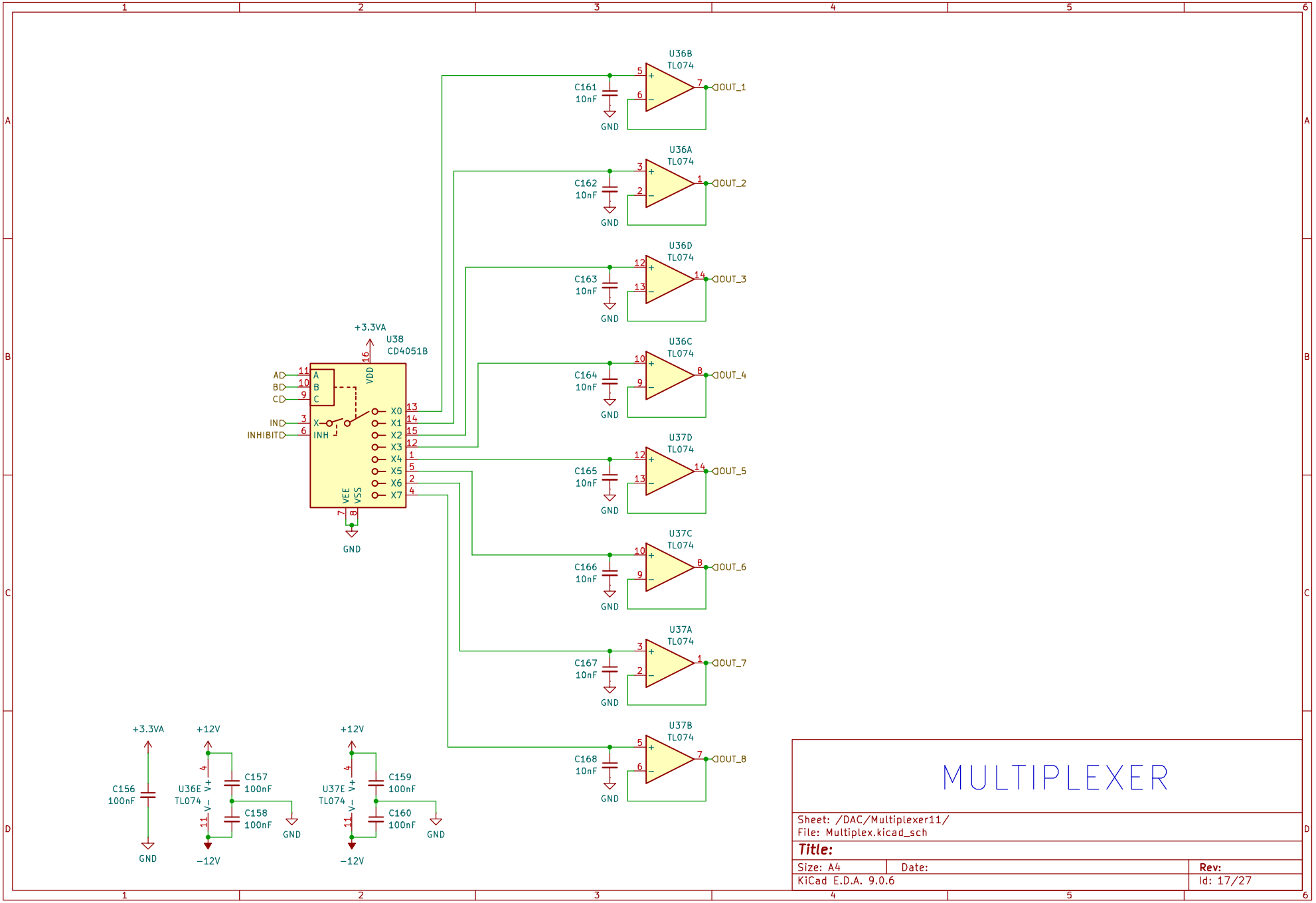
U36B
TL074
C161
10nF
GND
OUT_1
U36A
TL074
C162
10nF
GND
OUT_2
U36D
TL074
C163
10nF
GND
OUT_3
U36C
TL074
C164
10nF
GND
OUT_4
U37D
TL074
C165
10nF
GND
OUT_5
U37C
TL074
C166
10nF
GND
OUT_6
U37A
TL074
C167
10nF
GND
OUT_7
U37B
TL074
C168
10nF
GND
OUT_8
+3.3VA
U38
CD4051B
VDD
A
B
C
X
INH
VEE
VSS
X0
X1
X2
X3
X4
X5
X6
X7
AD
BD
CD
ID
INHIBITD
GND
+3.3VA
C156
100nF
GND
+12V
U36E
TL074
V+
V−
C157
100nF
C158
100nF
GND
−12V
+12V
U37E
TL074
V+
V−
C159
100nF
C160
100nF
GND
−12V
MULTIPLEXER
Sheet: /DAC/Multiplexer11/
File: Multiplex.kicad_sch
Title:
Size: A4
Date:
Rev:
KiCad E.D.A. 9.0.6
Id: 17/27

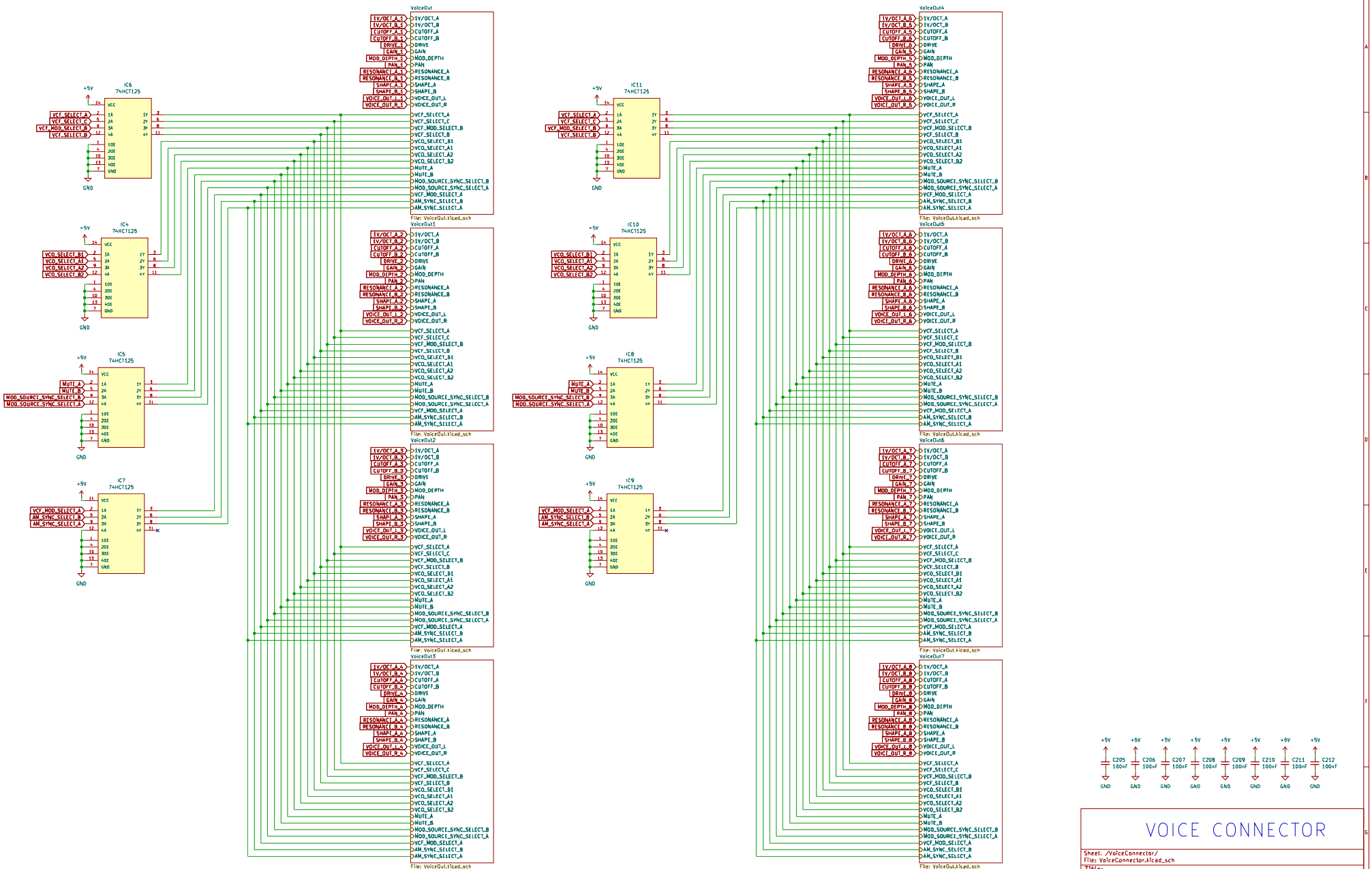

VOICE CONNECTOR

Sheet: /VoiceConnector/
File: VoiceConnector.kicad_sch

Title:

Size: User	Date:	Rev:
KiCad E.D.A. 9.0.6		Id: 18/27

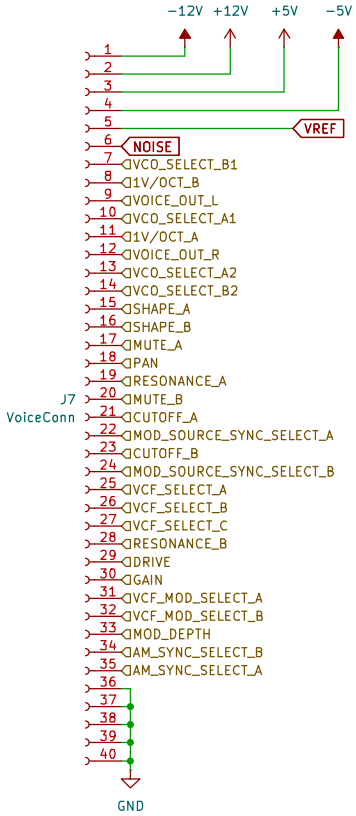

VOICE OUT

Sheet: /VoiceConnector/VoiceOut/
File: VoiceOut.kicad_sch

Title:

Size: A4	Date:	**Rev:**
KiCad E.D.A. 9.0.6		Id: 19/27

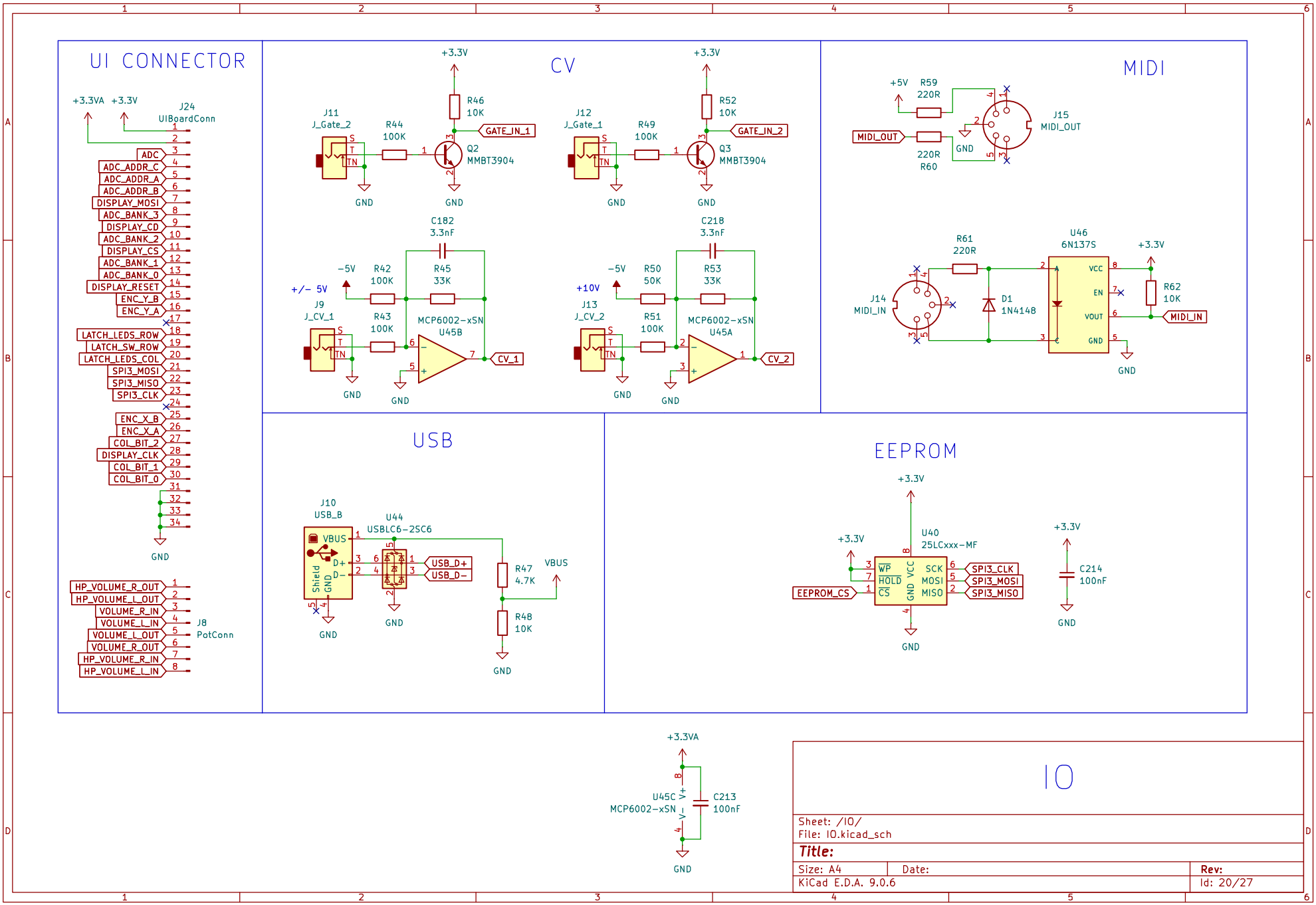

IO

Sheet: /IO/
File: IO.kicad_sch

Title:

Size: A4	Date:	Rev:
KiCad E.D.A. 9.0.6		Id: 20/27

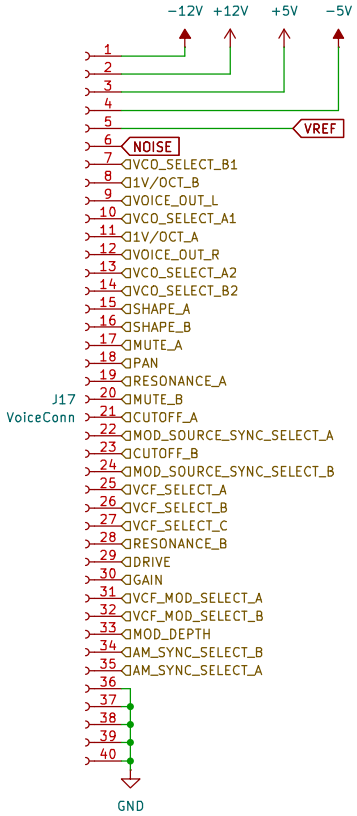

VOICE OUT

Sheet: /VoiceConnector/VoiceOut1/
File: VoiceOut.kicad_sch

Title:

Size: A4	Date:	Rev:
KiCad E.D.A. 9.0.6		Id: 21/27

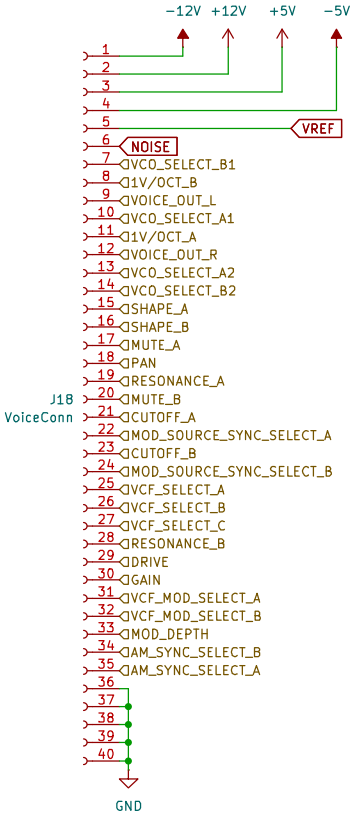

VOICE OUT

Sheet: /VoiceConnector/VoiceOut2/
File: VoiceOut.kicad_sch

Title:

Size: A4	Date:	**Rev:**
KiCad E.D.A. 9.0.6		Id: 22/27

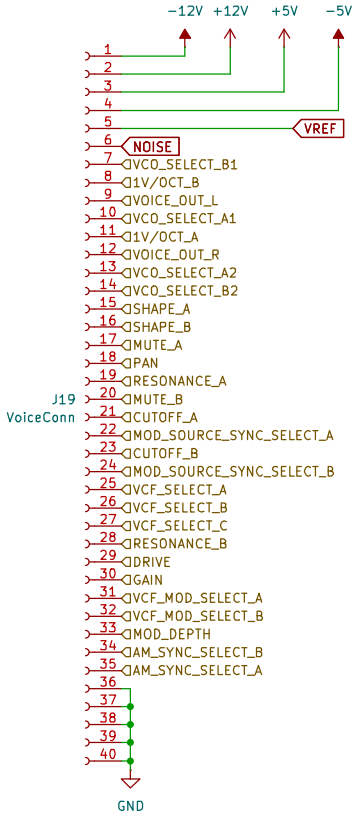

VOICE OUT

Sheet: /VoiceConnector/VoiceOut3/
File: VoiceOut.kicad_sch

Title:

Size: A4	Date:	**Rev:**
KiCad E.D.A. 9.0.6		Id: 23/27

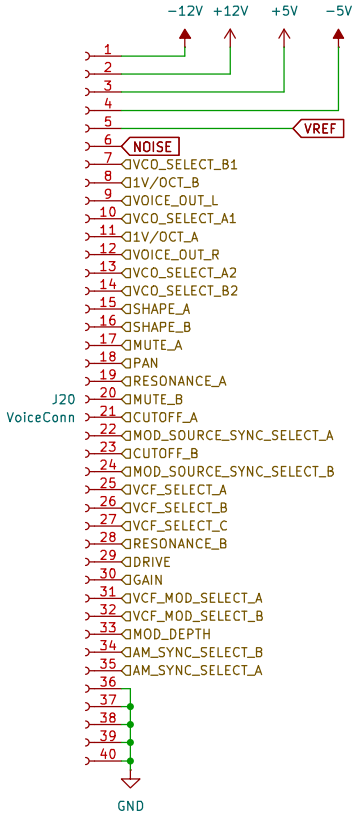

VOICE OUT

Sheet: /VoiceConnector/VoiceOut4/
File: VoiceOut.kicad_sch

Title:

Size: A4	Date:	Rev:
KiCad E.D.A. 9.0.6		Id: 24/27

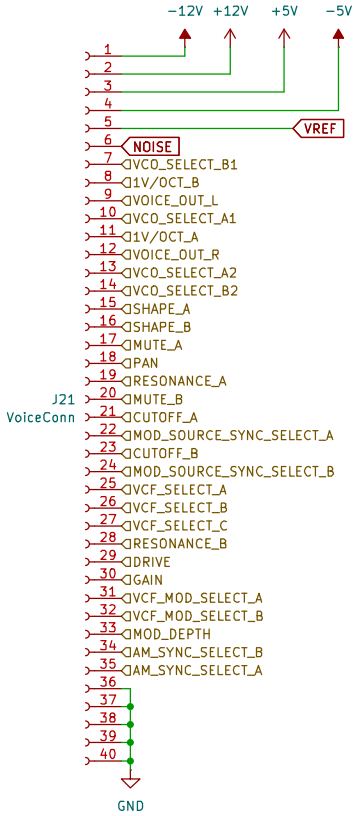

VOICE OUT

Sheet: /VoiceConnector/VoiceOut5/
File: VoiceOut.kicad_sch

Title:

Size: A4	Date:	Rev:
KiCad E.D.A. 9.0.6		Id: 25/27

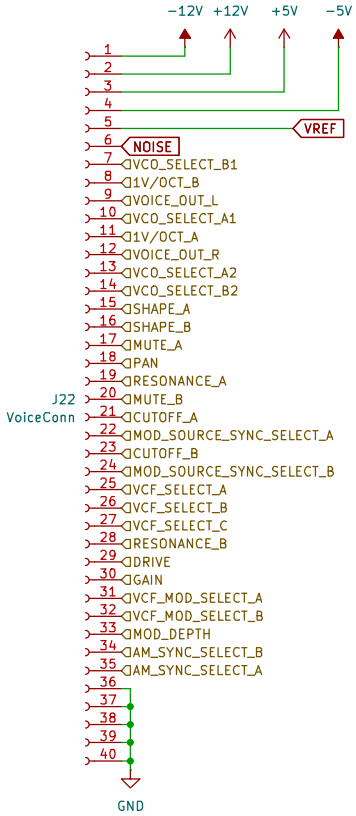

VOICE OUT

Sheet: /VoiceConnector/VoiceOut6/
File: VoiceOut.kicad_sch

Title:

Size: A4	Date:	**Rev:**
KiCad E.D.A. 9.0.6		Id: 26/27

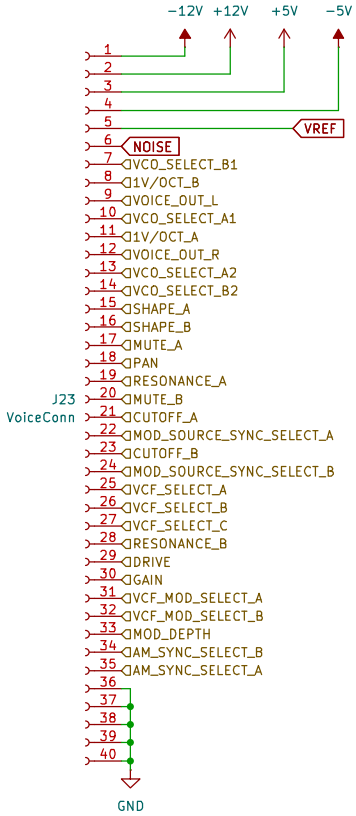

VOICE OUT

Sheet: /VoiceConnector/VoiceOut7/
File: VoiceOut.kicad_sch

Title:

Size: A4	Date:	Rev:
KiCad E.D.A. 9.0.6		Id: 27/27