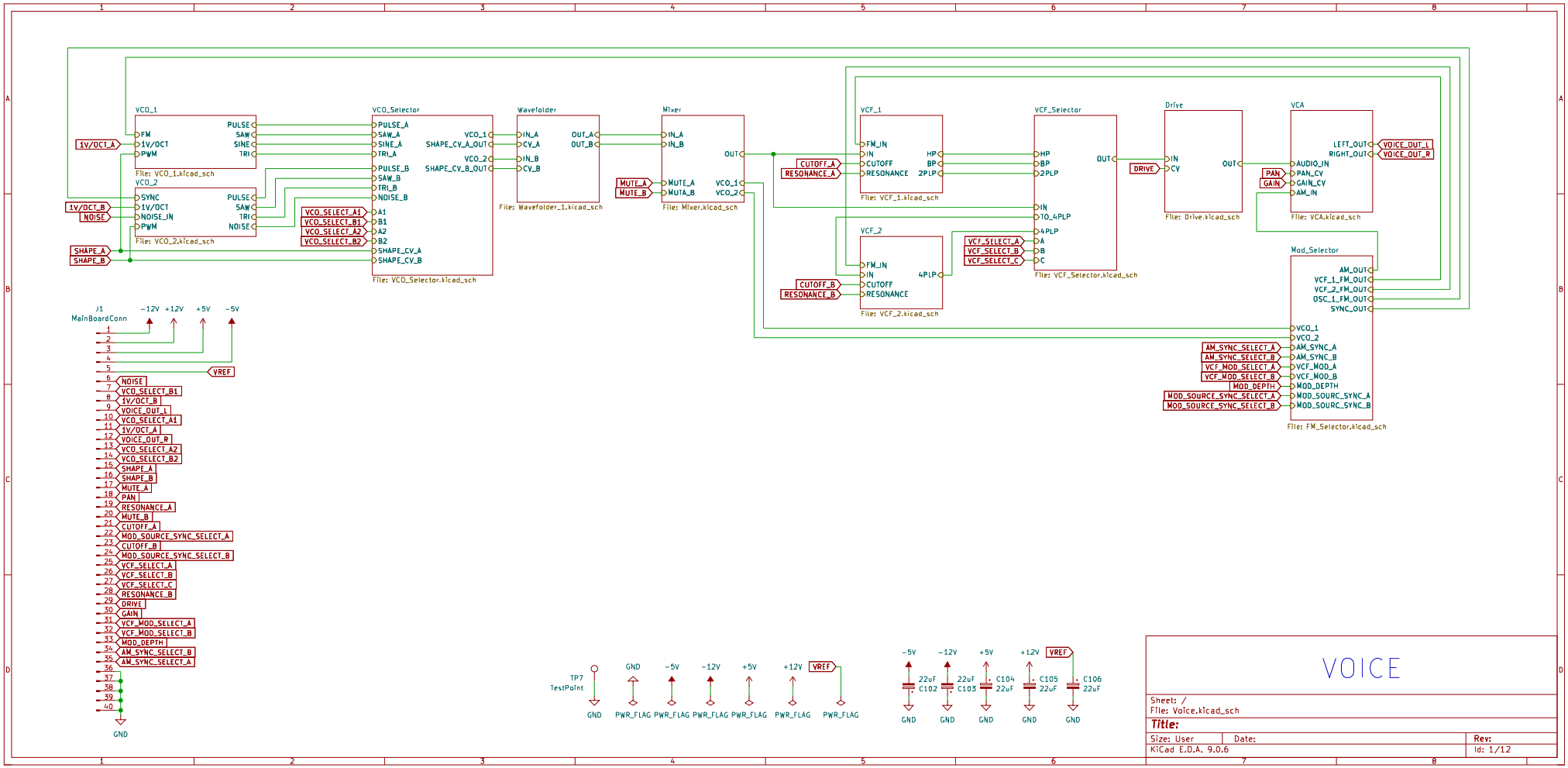

VOICE

Sheet: /
File: Voice.kicad_sch

Title:

Size: User	Date:	Rev:
KiCad E.D.A. 9.0.6		Id: 1/12

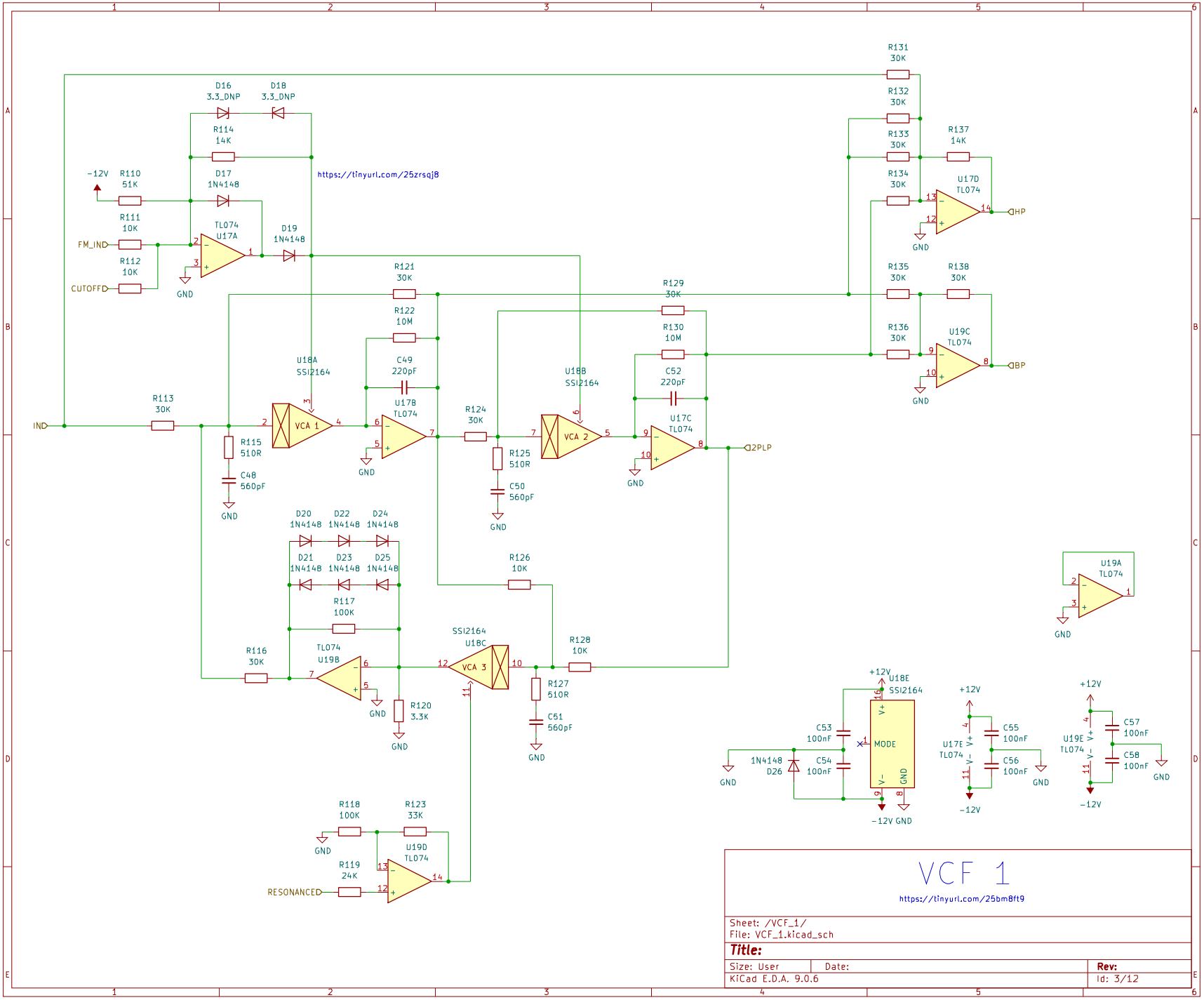

VCF 1

https://tinyurl.com/25bm8ft9

Sheet: /VCF_1/
File: VCF_1.kicad_sch

Title:

Size: User	Date:	Rev:
KiCad E.D.A. 9.0.6		Id: 3/12

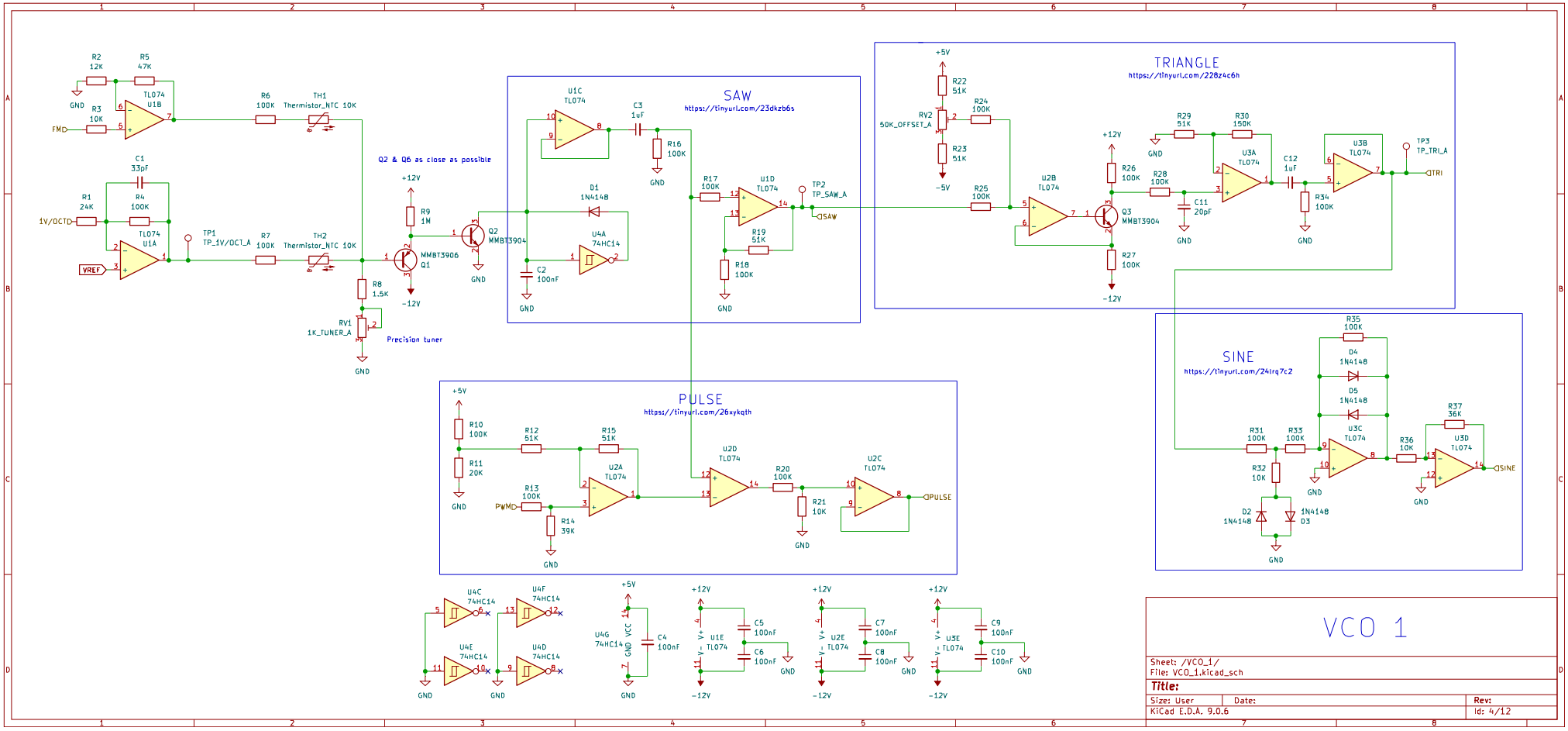

VCO 1

Sheet: /VCO_1/
File: VCO_1.kicad_sch

Title:

Size: User	Date:	Rev:
KiCad E.D.A. 9.0.6		Id: 4/12

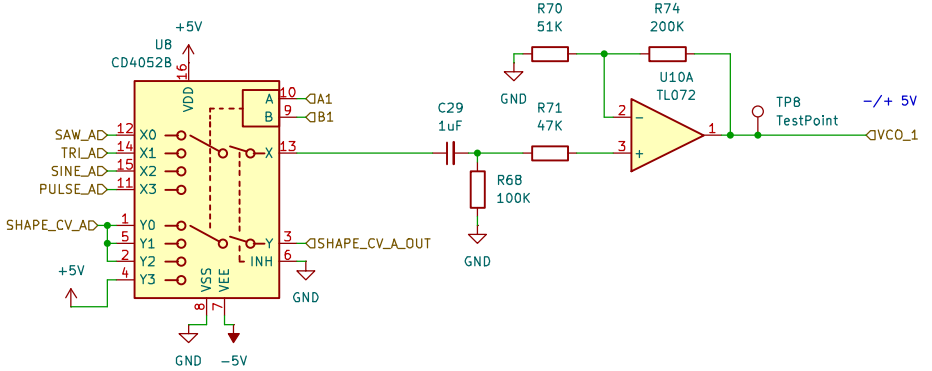

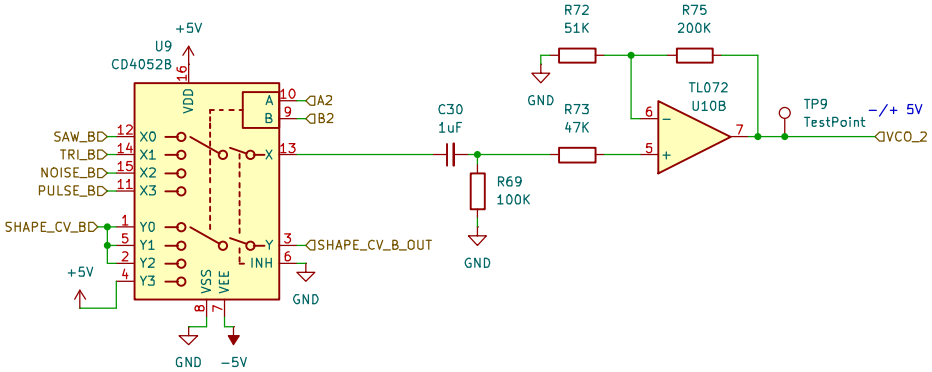

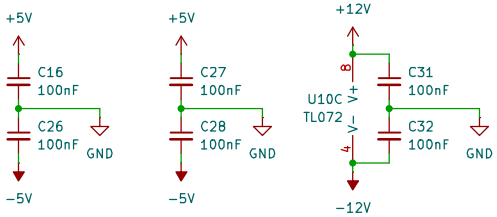

VCO SELECTOR

Sheet: /VCO_Selector/
File: VCO_Selector.kicad_sch

Title:

Size: A4	Date:	Rev:
KiCad E.D.A. 9.0.6		Id: 5/12

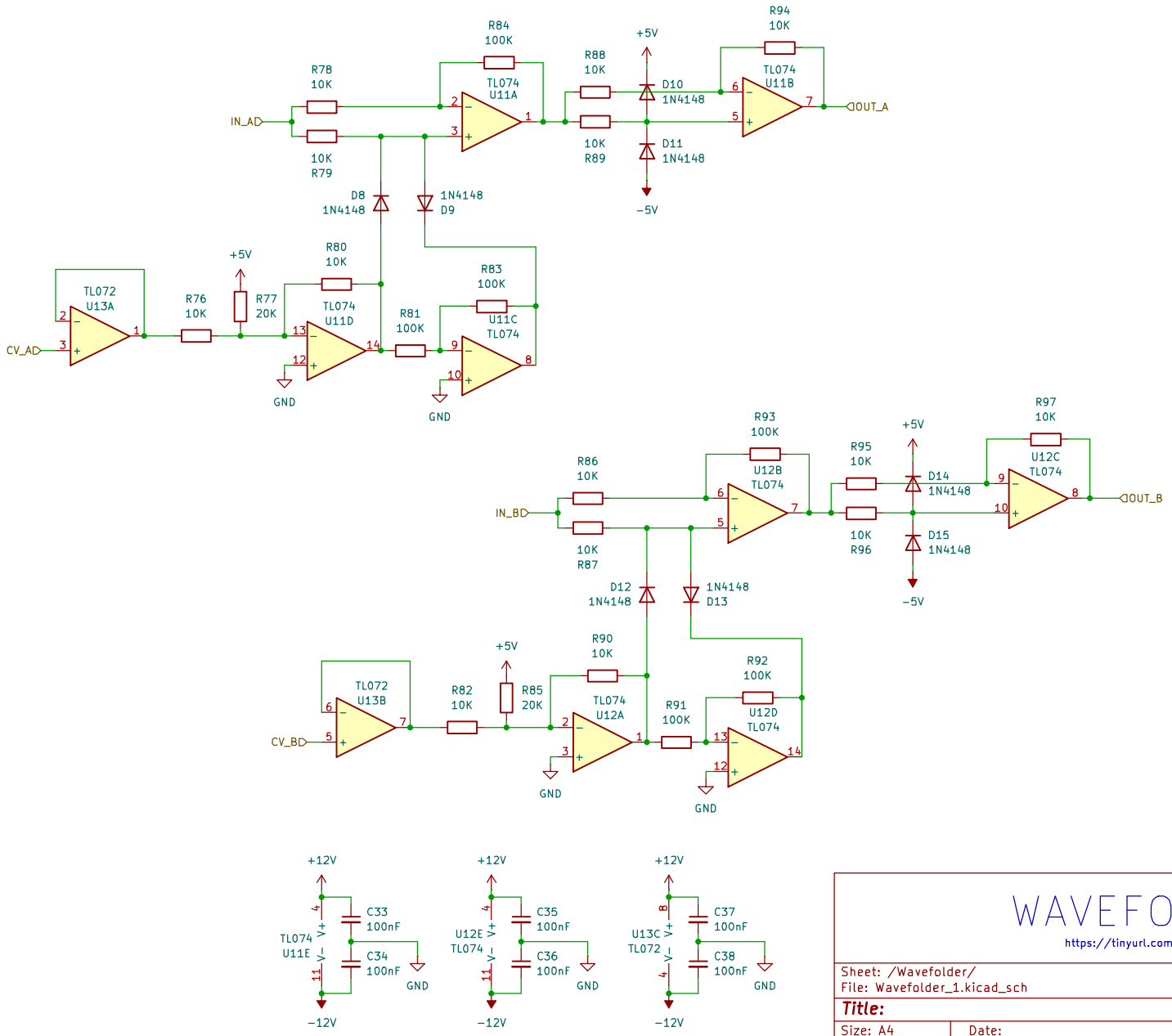

WAVEFOLDER

https://tinyurl.com/24r7tumc

Sheet: /Wavefolder/		
File: Wavefolder_1.kicad_sch		
Title:		
Size: A4	Date:	**Rev:**
KiCad E.D.A. 9.0.6		Id: 6/12

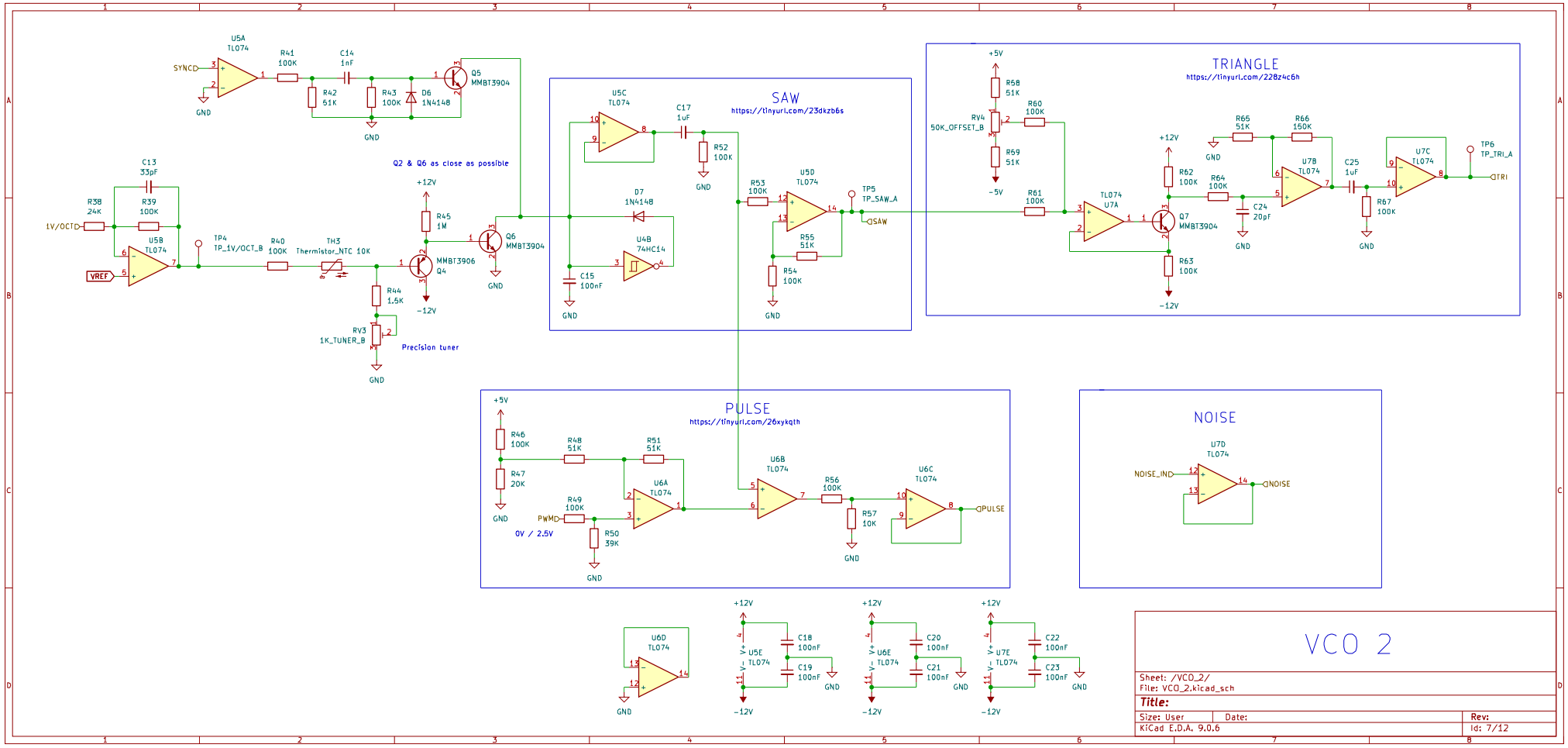
SAW
https://tinyurl.com/23dkzb6s
TRIANGLE
https://tinyurl.com/228z4c6h
PULSE
https://tinyurl.com/26xykqth
NOISE
Q2 & Q6 as close as possible
Precision tuner
SYNCD
1V/OCTD
VREF
PWMD
0V / 2.5V
NOISE_IND
TP4 TP_1V/OCT_B
TP5 TP_SAW_A
TP6 TP_TRI_A
SAW
TRI
PULSE
NOISE
U5A TL074
U5B TL074
U5C TL074
U5D TL074
U5E TL074
U6A TL074
U6B TL074
U6C TL074
U6D TL074
U6E TL074
U7A TL074
U7B TL074
U7C TL074
U7D TL074
U7E TL074
Q4 MMBT3906
Q5 MMBT3904
Q6 MMBT3904
Q7 MMBT3904
D6 1N4148
D7 1N4148
U4B 74HC14
TH3 Thermistor_NTC 10K
RV3 1K_TUNER_B
RV4 50K_OFFSET_B
R38 24K
R39 100K
R40 100K
R41 100K
R42 51K
R43 100K
R44 1.5K
R45 1M
R46 100K
R47 20K
R48 51K
R49 100K
R50 39K
R51 51K
R52 100K
R53 100K
R54 100K
R55 51K
R56 100K
R57 10K
R58 51K
R59 51K
R60 100K
R61 100K
R62 100K
R63 100K
R64 100K
R65 51K
R66 150K
R67 100K
C13 33pF
C14 1nF
C15 100nF
C17 1uF
C18 100nF
C19 100nF
C20 100nF
C21 100nF
C22 100nF
C23 100nF
C24 20pF
C25 1uF
+12V
-12V
+5V
-5V
GND
VCO 2
Sheet: /VCO_2/
File: VCO_2.kicad_sch
Title:
Size: User
Date:
Rev:
KiCad E.D.A. 9.0.6
Id: 7/12

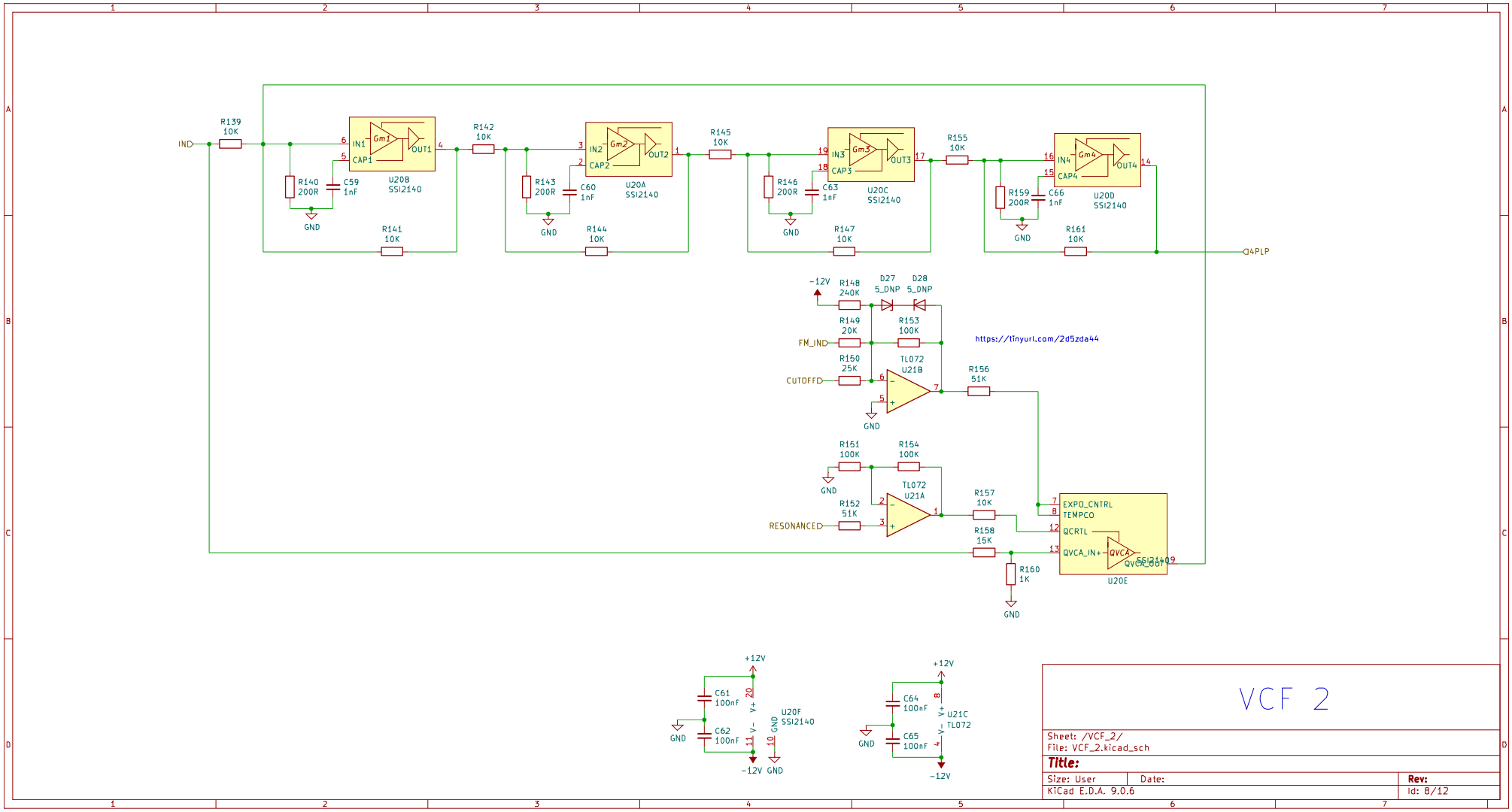
IND
R139 10K
R140 200R
C59 1nF
GND
U20B SSI2140
IN1 Gm1 OUT1 CAP1
R141 10K
R142 10K
R143 200R
C60 1nF
U20A SSI2140
IN2 Gm2 OUT2 CAP2
R144 10K
R145 10K
R146 200R
C63 1nF
U20C SSI2140
IN3 Gm3 OUT3 CAP3
R147 10K
R155 10K
R159 200R
C66 1nF
U20D SSI2140
IN4 Gm4 OUT4 CAP4
R161 10K
4PLP
-12V
R148 240K
D27 5_DNP
D28 5_DNP
R149 20K
R153 100K
FM_IND
https://tinyurl.com/2d5zda44
R150 25K
CUTOFFD
TL072 U21B
R156 51K
R151 100K
R154 100K
TL072 U21A
R152 51K
RESONANCED
R157 10K
R158 15K
R160 1K
EXPO_CNTRL
TEMPCO
QCRTL
QVCA_IN+
QVCA
QVCA_OUT
SSI2409
U20E
+12V
C61 100nF
C62 100nF
U20F SSI2140
V+ V- GND
C64 100nF
C65 100nF
U21C TL072
VCF 2
Sheet: /VCF_2/
File: VCF_2.kicad_sch
Title:
Size: User
Date:
Rev:
KiCad E.D.A. 9.0.6
Id: 8/12

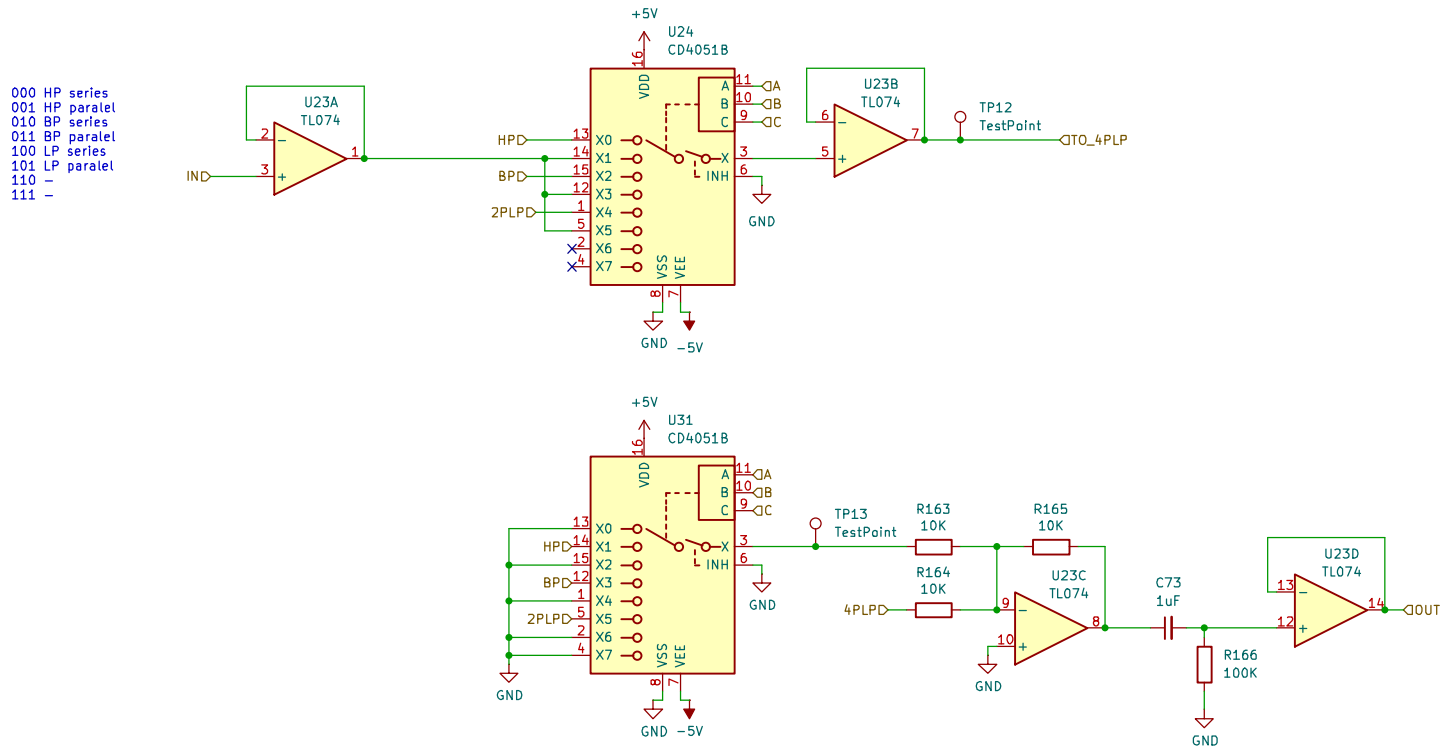

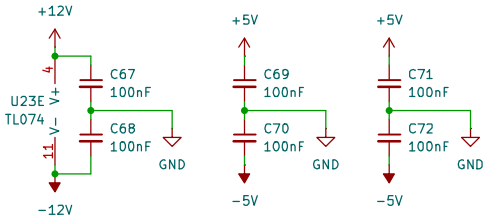

VCF SELECTOR

Sheet: /VCF_Selector/
File: VCF_Selector.kicad_sch

Title:

Size: A4	Date:	Rev:
KiCad E.D.A. 9.0.6		Id: 9/12

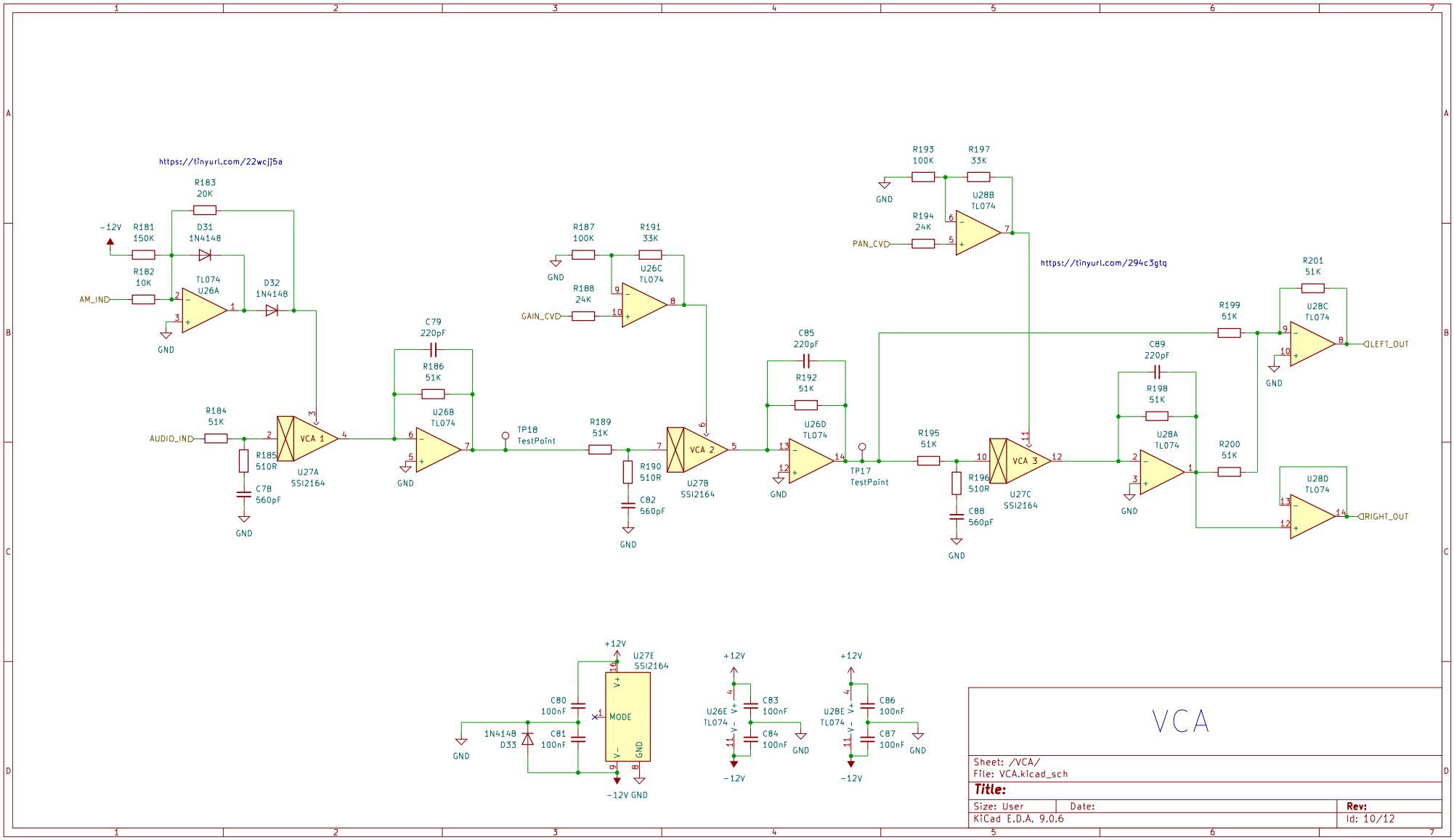

VCA

Sheet: /VCA/
File: VCA.kicad_sch

Title:

Size: User	Date:	Rev:
KiCad E.D.A. 9.0.6		Id: 10/12

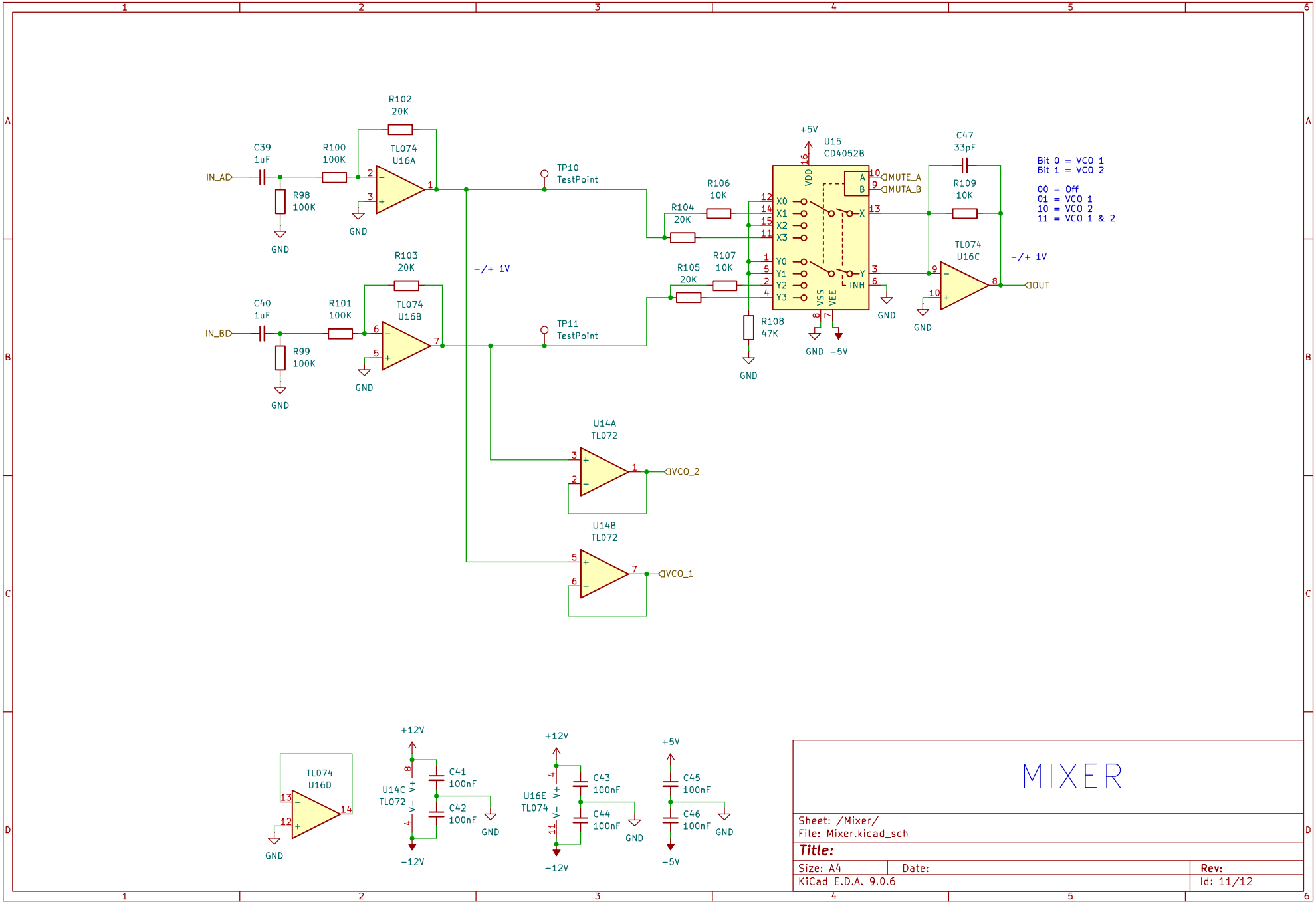

MIXER

Sheet: /Mixer/
File: Mixer.kicad_sch

Title:

Size: A4	Date:	Rev:
KiCad E.D.A. 9.0.6		Id: 11/12

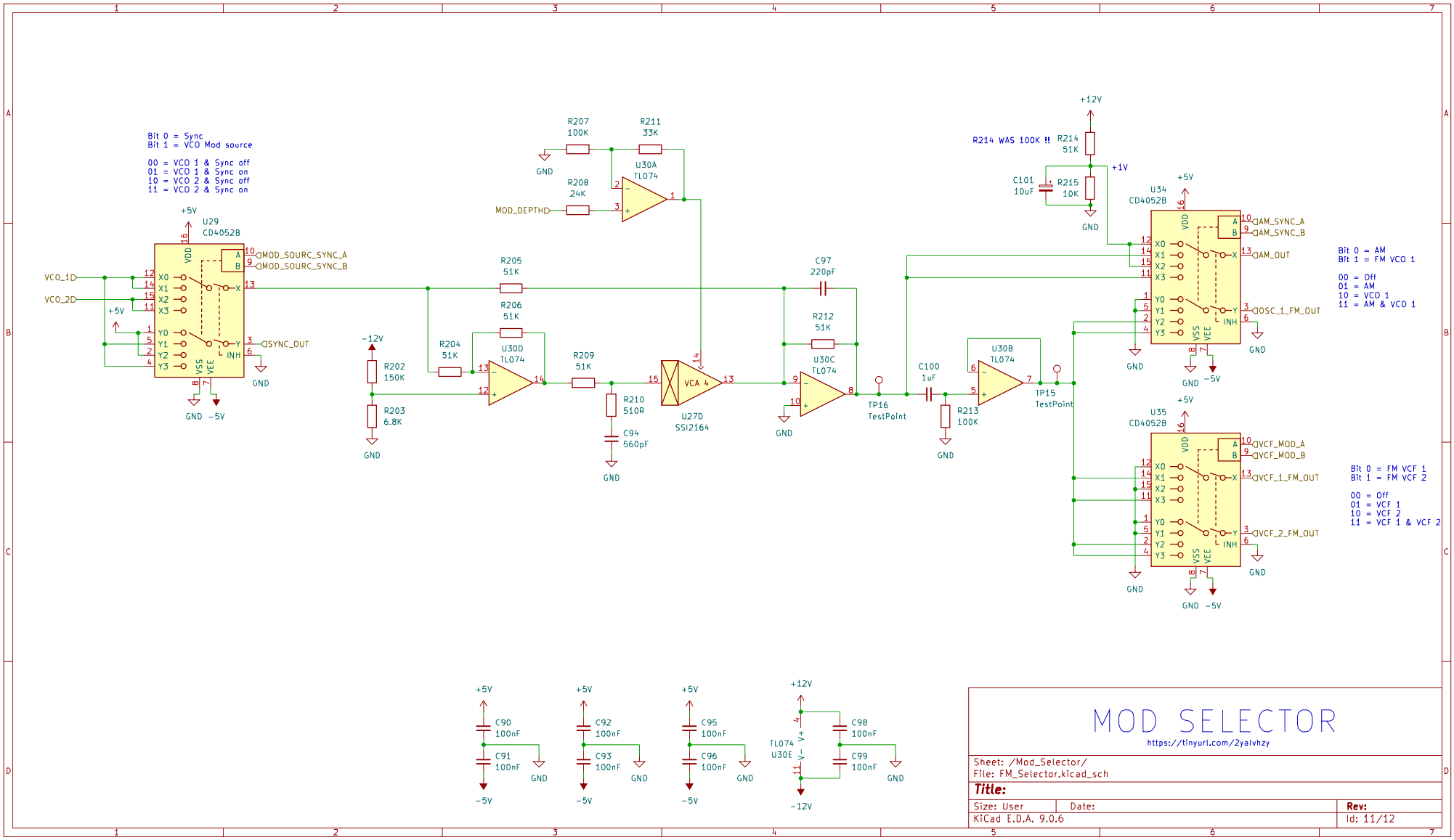
Bit 0 = Sync
Bit 1 = VCO Mod source
00 = VCO 1 & Sync off
01 = VCO 1 & Sync on
10 = VCO 2 & Sync off
11 = VCO 2 & Sync on
U29
CD4052B
VCO_1D
VCO_2D
MOD_SOURC_SYNC_A
MOD_SOURC_SYNC_B
SYNC_OUT
R207
100K
R211
33K
U30A
TL074
R208
24K
MOD_DEPTH
R205
51K
R206
51K
R204
51K
U30D
TL074
R202
150K
R203
6.8K
R209
51K
R210
510R
C94
560pF
VCA 4
U27D
SSI2164
C97
220pF
R212
51K
U30C
TL074
TP16
TestPoint
C100
1uF
R213
100K
U30B
TL074
TP15
TestPoint
R214 WAS 100K !!
R214
51K
R215
10K
C101
10uF
U34
CD4052B
AM_SYNC_A
AM_SYNC_B
AM_OUT
OSC_1_FM_OUT
Bit 0 = AM
Bit 1 = FM VCO 1
00 = Off
01 = AM
10 = VCO 1
11 = AM & VCO 1
U35
CD4052B
VCF_MOD_A
VCF_MOD_B
VCF_1_FM_OUT
VCF_2_FM_OUT
Bit 0 = FM VCF 1
Bit 1 = FM VCF 2
00 = Off
01 = VCF 1
10 = VCF 2
11 = VCF 1 & VCF 2
C90
100nF
C91
100nF
C92
100nF
C93
100nF
C95
100nF
C96
100nF
TL074
U30E
C98
100nF
C99
100nF
MOD SELECTOR
https://tinyurl.com/2yalvhzy
Sheet: /Mod_Selector/
File: FM_Selector.kicad_sch
Title:
Size: User
Date:
Rev:
KiCad E.D.A. 9.0.6
Id: 11/12

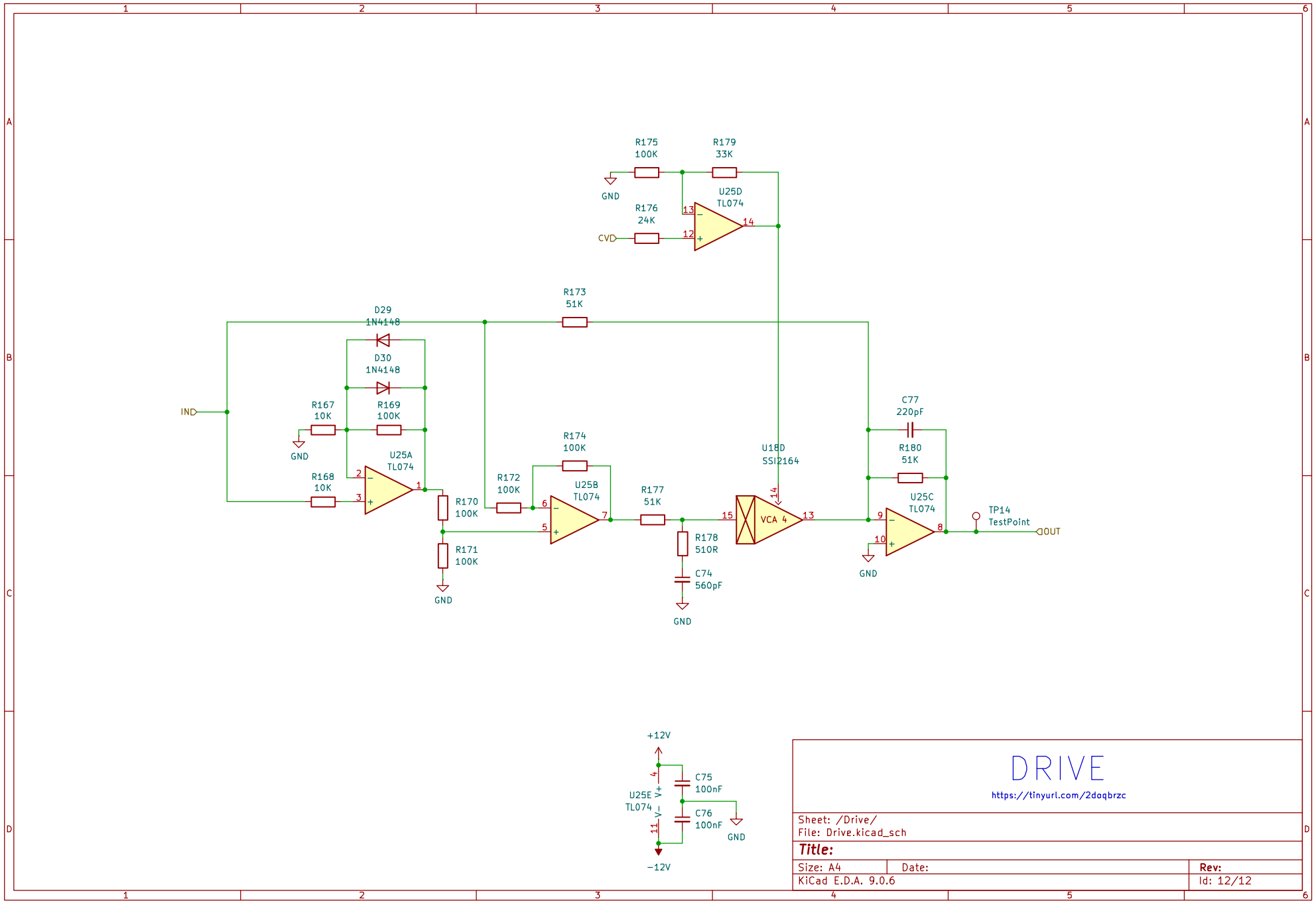
R175
100K
R179
33K
GND
U25D
TL074
R176
24K
CVD
R173
51K
D29
1N4148
D30
1N4148
IND
R167
10K
R169
100K
GND
U25A
TL074
R168
10K
R170
100K
R171
100K
GND
R174
100K
R172
100K
U25B
TL074
R177
51K
R178
510R
C74
560pF
GND
U18D
SSI2164
VCA 4
C77
220pF
R180
51K
U25C
TL074
GND
TP14
TestPoint
OUT
+12V
U25E
TL074
V+
V−
C75
100nF
C76
100nF
GND
−12V
DRIVE
https://tinyurl.com/2daqbrzc
Sheet: /Drive/
File: Drive.kicad_sch
Title:
Size: A4
Date:
Rev:
KiCad E.D.A. 9.0.6
Id: 12/12