PARTS LIST			
ITEM	QTY	PART NUMBER	DESCRIPTION
1	1	Base Enclosure	Enclosure
2	1	Motor	Vibration Motor
3	1	Nano	Microcontroller
4	1	Battery management	Charging management
5	1	Battery	Internal Lipo battery
6	1	Switch	Power switch
7	1	Lid	Top cover

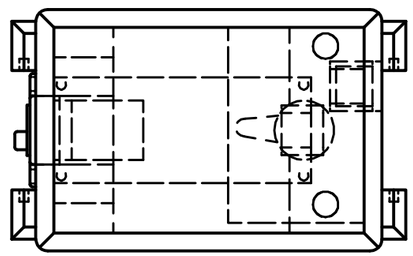

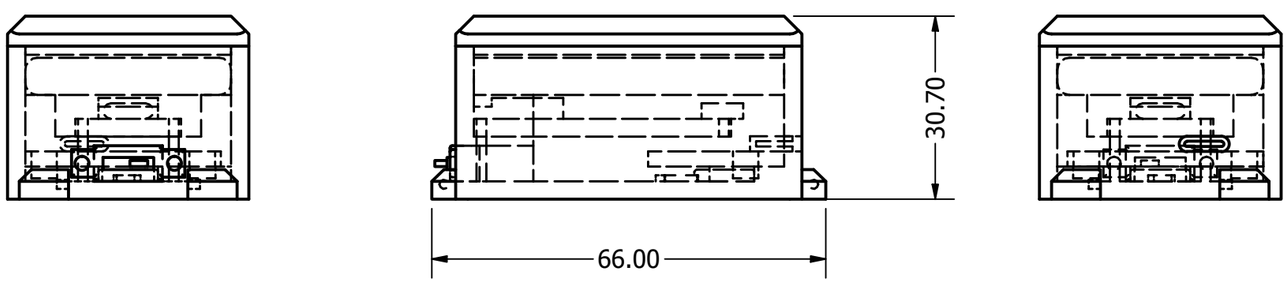

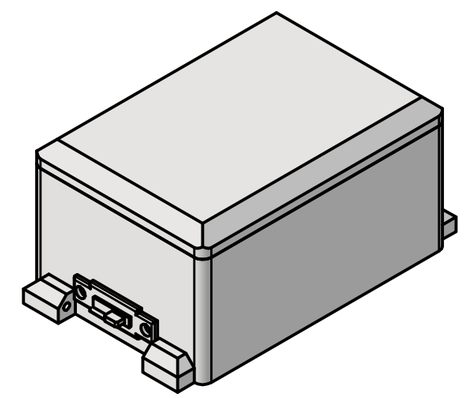

DRAWN udeep	2023-01-18	TITLE	
CHECKED			
QA			
MFG			
APPROVED			
		SIZE B	DWG NO Hardware_assembly_dwg	REV
		SCALE 1 : 1	SHEET 1 OF 1