AWESOMATIX A800RR — SETUP SHEET

NAME	dw	DATE	TEMP. °C AIR / TRACK /
COUNTRY	germ	TRACK SURFACE	ASPHALT ☐ CARPET ☐
RACE		TRACK LAYOUT	TECHNICAL ☐ MIXED ☐ FAST ☐
TRACK		TRACTION	LOW ☐ MEDIUM ☐ HIGH ☐

FRONT

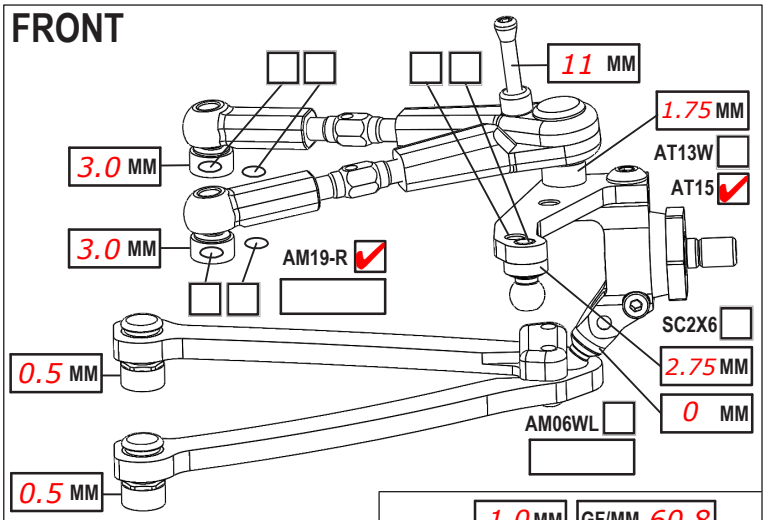

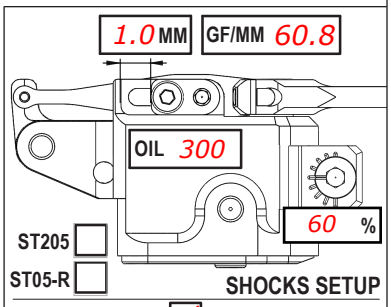

CAMBER ANGLE / °	2
CASTER ANGLE / °	4
TOE ANGLE / °	1.5
RIDE HEIGHT / MM	5.0
DOWNSTOP / MM	5.8
ANTI-ROLL BAR Ø / MM	1.1
ARB STIFFENER 1/4 ☐ 1/2 ☐ 3/4 ☐ 1 ☐	
LOWER ARM EXTENSION / MM	0
STEER. ARM AM14LS ☐	
2ND SPRING SPR-P2 ☐ P1 ☐	
WHEEL SPACER / MM	
DRIVE SPOOL ☐ DIFF ☐	
DRIVE POSITION DOWN ☐ UP ☑ +1 ☐	
DIFF OIL	DIFF SHIMS

DAMPER D4 ☑	
ROTOR 2 HOLES ☑	
SPRING STD ☐	S ☑
SRS/RHS ARR. I ☑	II ☐
PSS SETUP 30% ☐ 25% ☐ 15% ☐	
DAMPING LINEAR ☐ P1 ☐	P2 ☑
DAMPER SPACER / MM	
C45 YES ☐	NO ☑

REAR

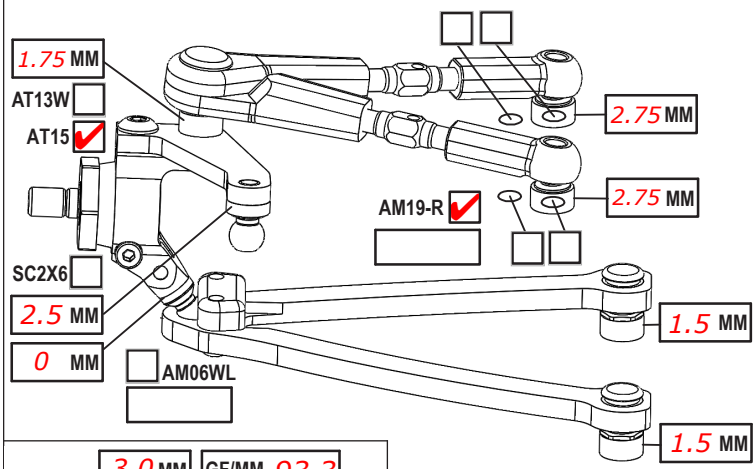

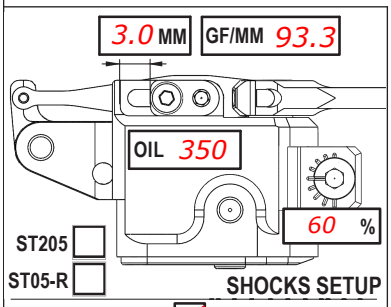

CAMBER ANGLE / °	2
CASTER ANGLE / °	3
TOE ANGLE / °	2.5
RIDE HEIGHT / MM	5.2
DOWNSTOP / MM	4.8
ANTI-ROLL BAR Ø / MM	1.1
ARB STIFFENER 1/4 ☐ 1/2 ☐ 3/4 ☐ 1 ☐	
LOWER ARM EXTENSION / MM	0
STEER. ARM AM23-1 ☐	
2ND SPRING SPR-P2 ☐ P1 ☐	
WHEEL SPACER / MM	0
DRIVE DIFF ☐	
DRIVE POSITION DOWN ☐ UP ☐ +1 ☑	
DIFF OIL 8000	DIFF SHIMS ss

DAMPER D4 ☑	
ROTOR 2 HOLES ☑	
SPRING STD ☐	S ☑
SRS/RHS ARR. I ☑	II ☐
PSS SETUP 30% ☐ 25% ☐ 15% ☐	
DAMPING LINEAR ☐ P1 ☐	P2 ☑
DAMPER SPACER / MM	
C45 YES ☑	NO ☐

CHASSIS FLEX AND WEIGHT SETTINGS

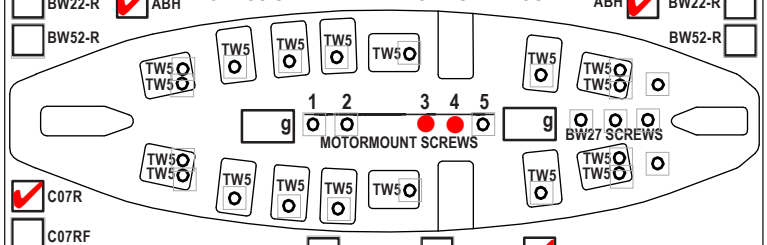

LOWER DECK C01B-RAF ☐ C01B-RC ☐ C01RS ☑ OTHER _____

☐ BUMPER TOP PLATE CUT FRONT BUMPER P15L ☑ OTHER _____

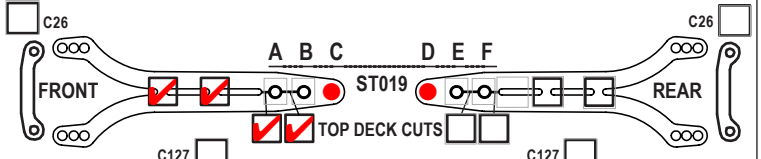

FRONT TOP DECK C127 ☐ C127S ☑ OTHER _____

REAR TOP DECK C127 ☐ C127S ☑ OTHER _____

SINGLE TOP DECK C27MMX ☐ OTHER _____

BELT TENSIONER AM279 ☑ OTHER _____

TIRES	rush 28
INSERTS	
SIDE WALLS GLUE Ø / MM F R	
ADDITIVE	TIME MIN. F 20 R 20
TOTAL WEIGHT 1300	WEIGHT DISTRIBUTION % F 50 R 50

NOTES:

MOTOR LATERAL SHIFT / MM	SERVO
MOTOR	SERVOHORN / HEIGHT 17mm
SPUR 102 PINION 43 RATIO 4.51	ACKERMANN POSITION backward
BODY Wolv .4	STEER TRAVEL IN 25 OUT 17
WING Wolv .4	BATTERY
ESC	RECEIVER
ESC SETTING	RADIO
BEST LAPTIME	QUALIF./FINAL POSITION /

BODY POSITION

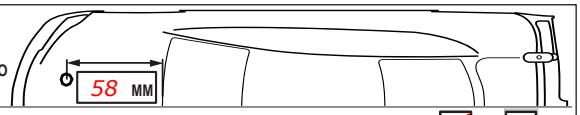

BOTTOM WINDOW LINE TO BODY POST DISTANCE 58 MM

FRONT BODY POST

ORING YES ☐ NO ☑

HOLE # 4

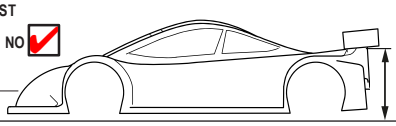

WINGLET YES ☑ NO ☐

REAR HRB SETTING / MM 2.25

SURFACE TO WING MOUNT DISTANCE / MM _____

COMMENTS: