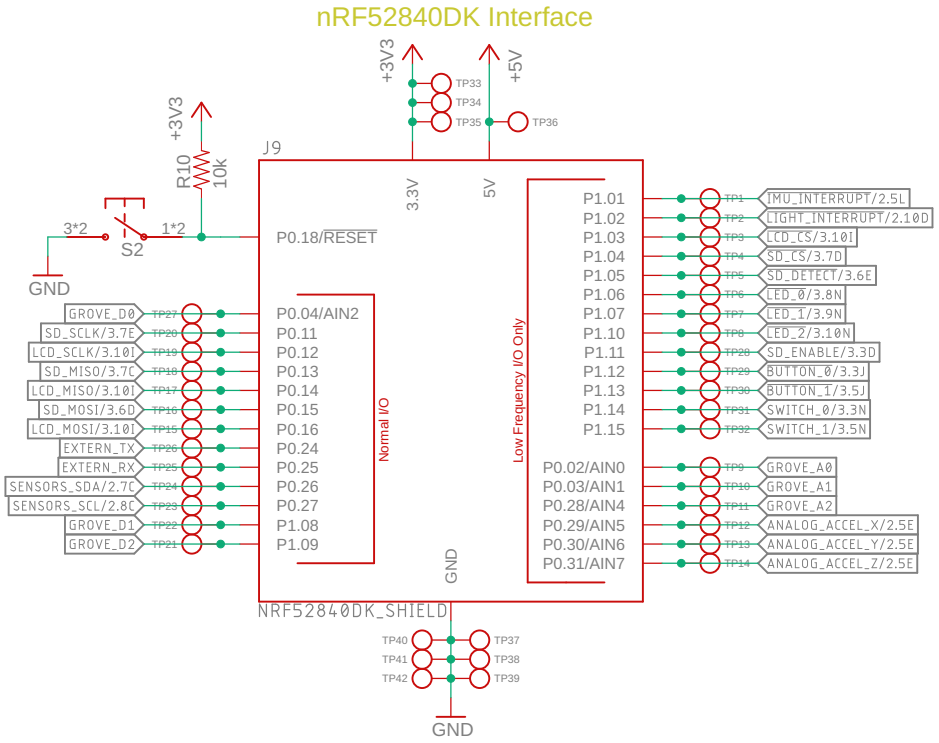

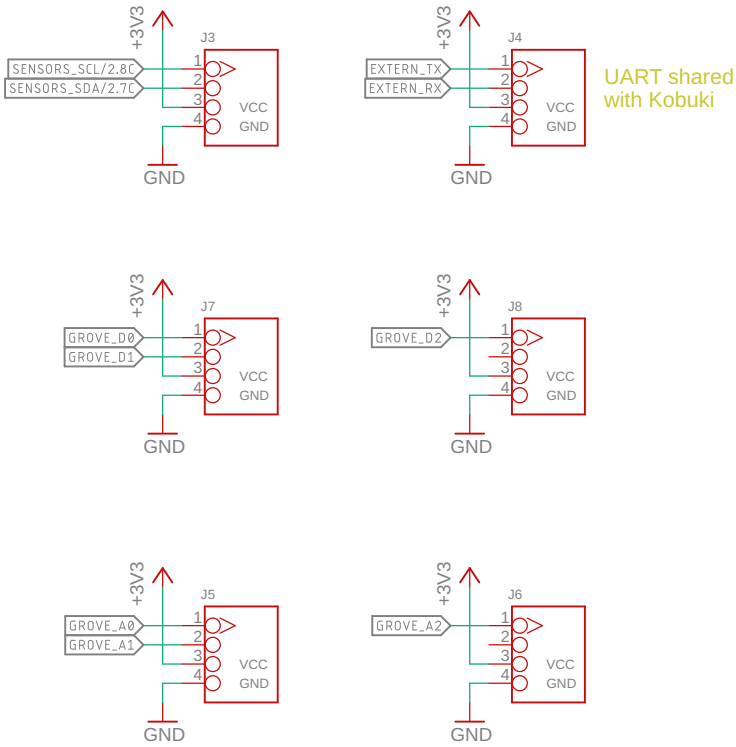

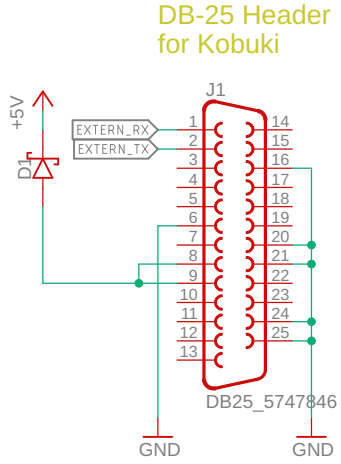

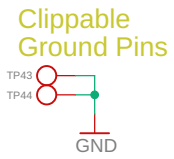

Berkeley Buckler	REV: A
Author: Branden Ghena	
Date: 8/2/18 6:26 PM	Sheet: 1/3

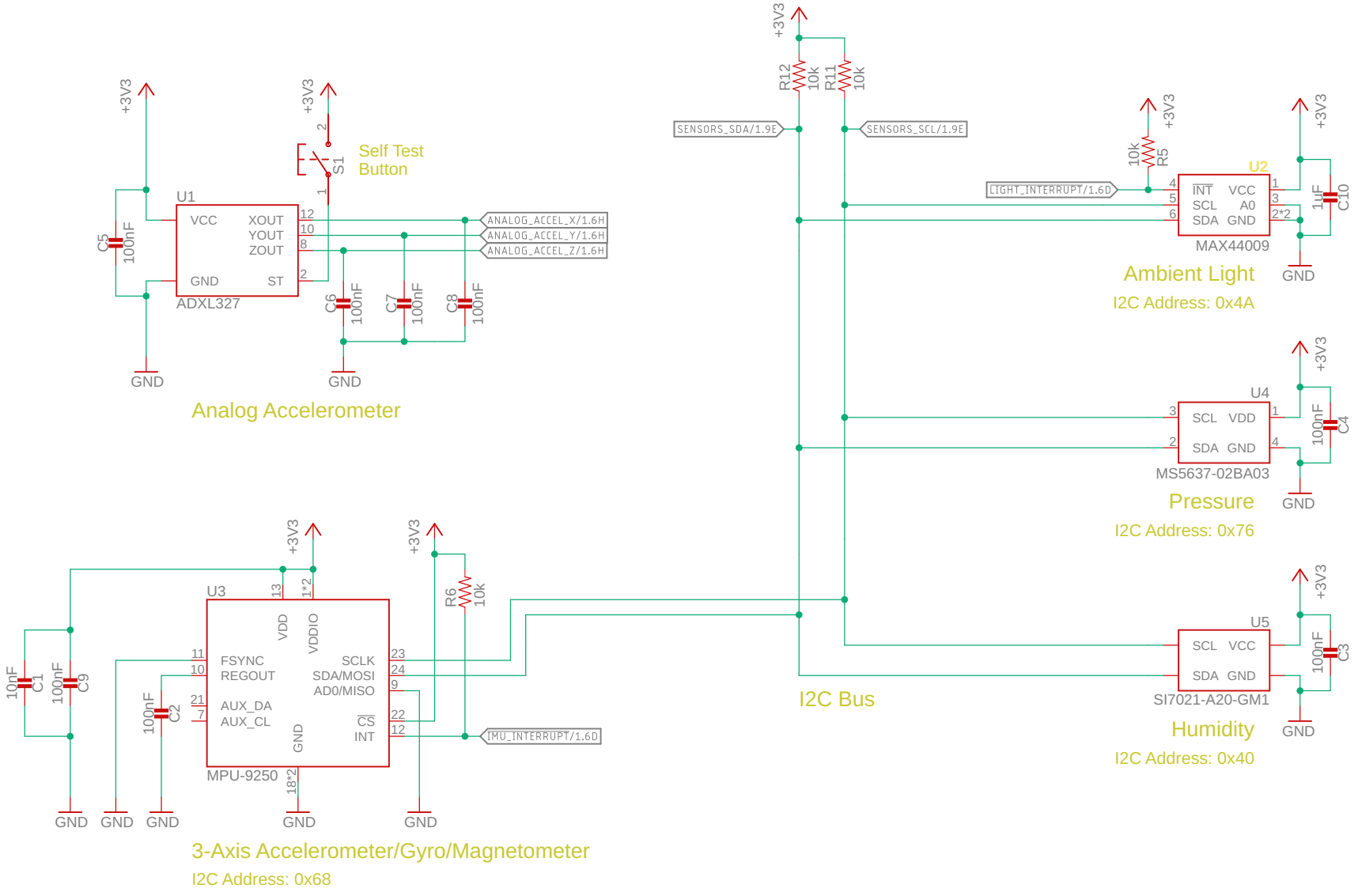

Berkeley Buckler	REV: A
Author: Branden Ghena	
Date: 8/2/18 6:26 PM	Sheet: 2/3

SD Card Adapter

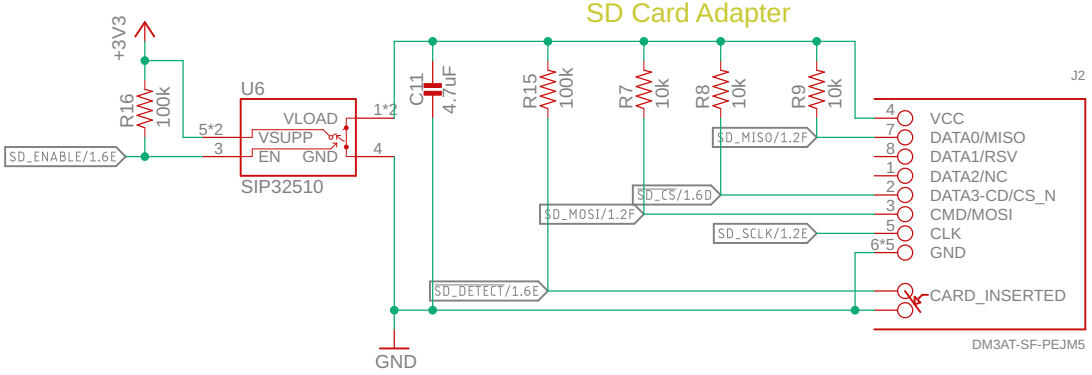

Push Buttons (Momentary)

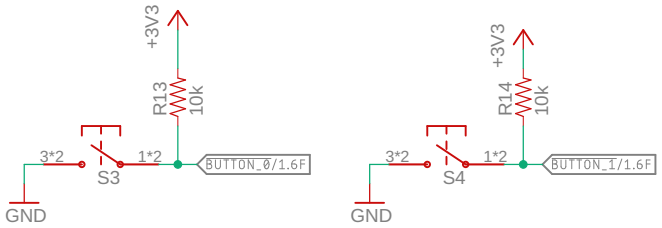

2x16 LCD Screen

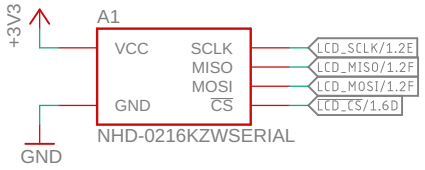

Switches

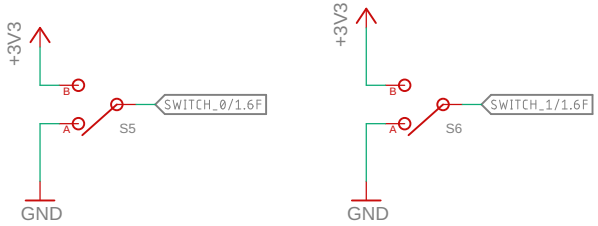

LEDs (Various Colors)

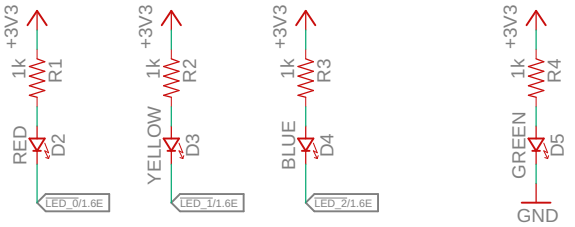

Power Indicator

Berkeley Buckler	REV: A
Author: Branden Ghena	
Date: 8/2/18 6:26 PM	Sheet: 3/3

Top and Bottom Layers

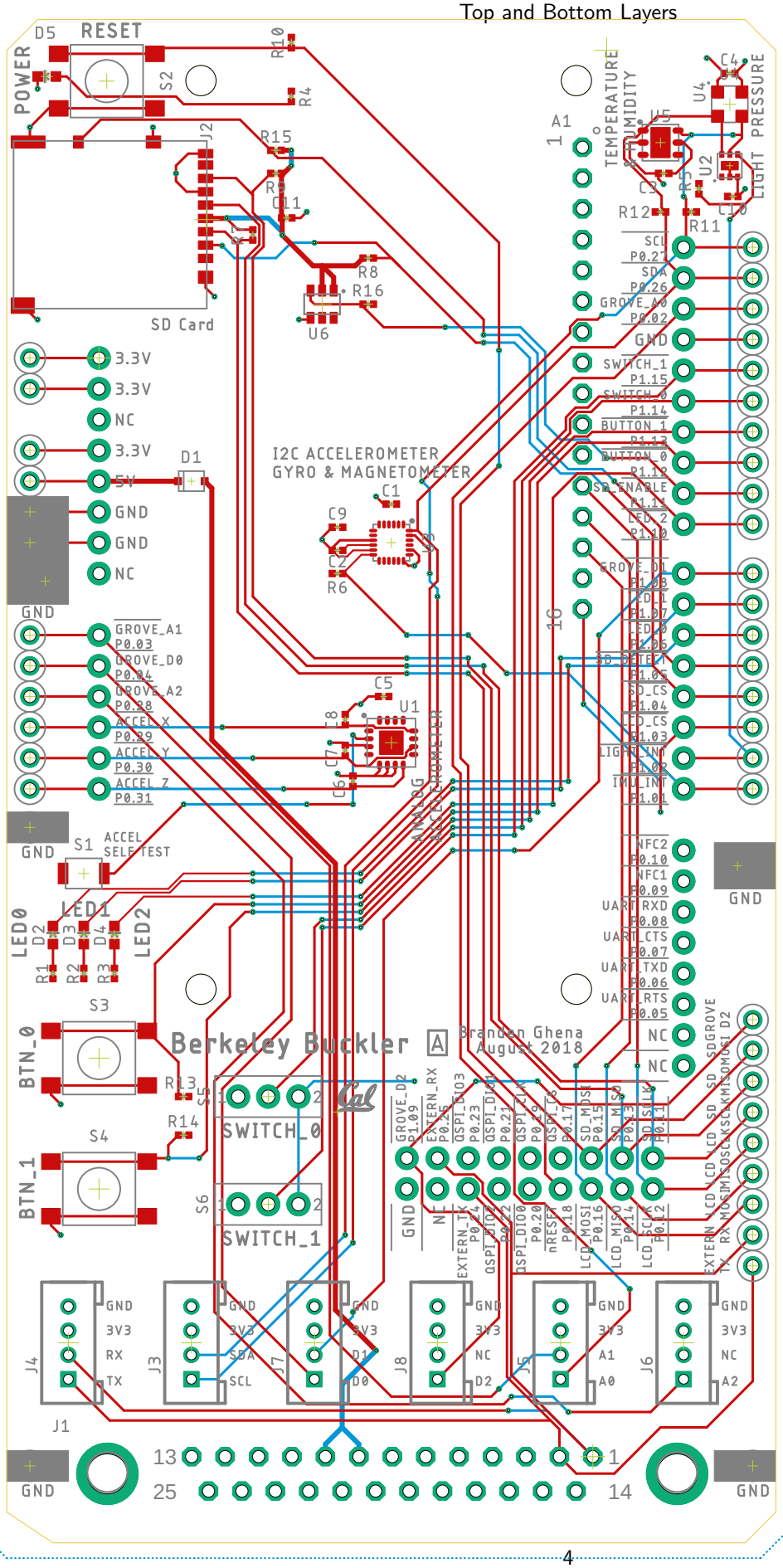

Top Layer

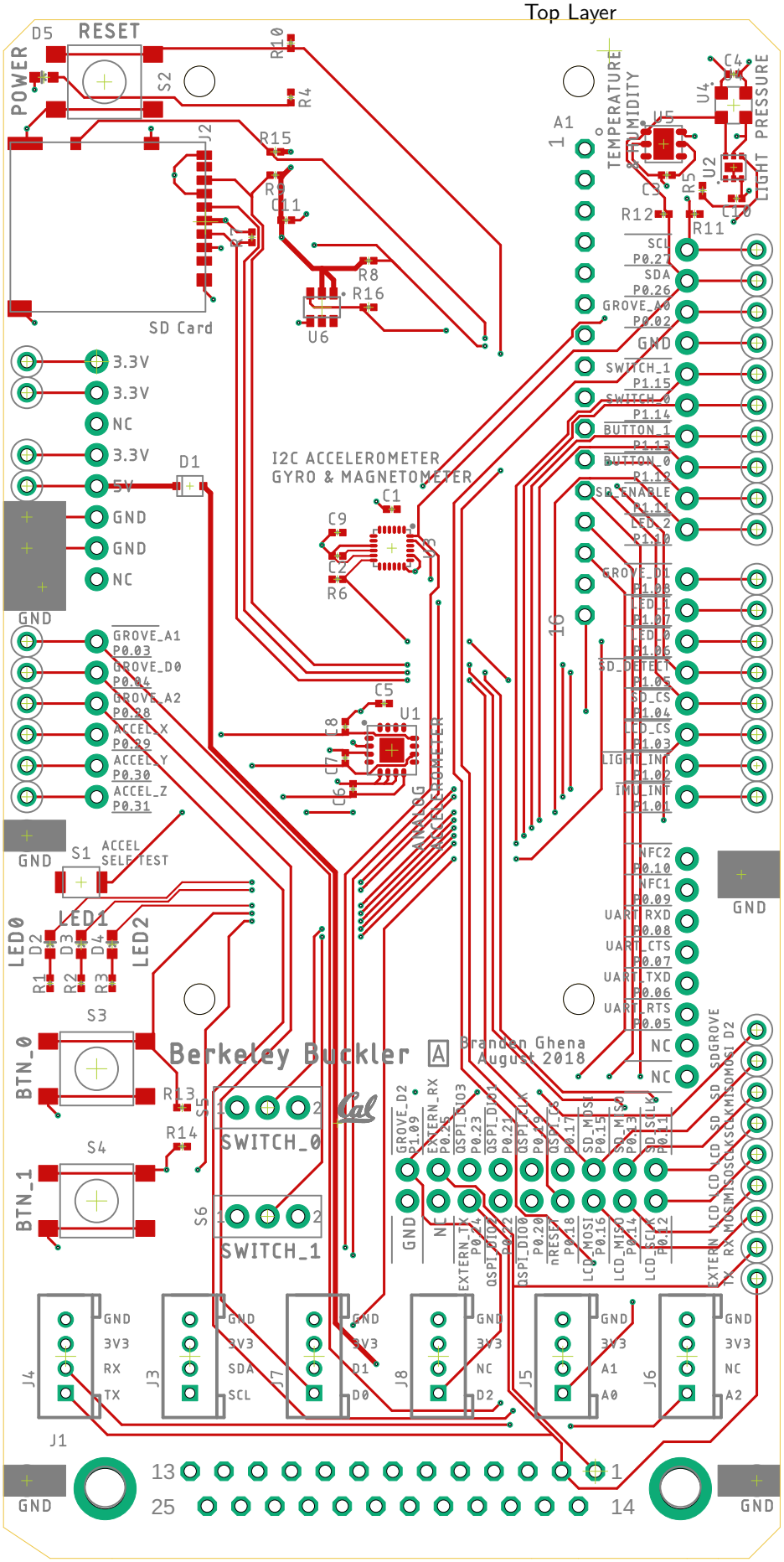

RESET
POWER
SD Card
TEMPERATURE
HUMIDITY
LIGHT
PRESSURE
I2C ACCELEROMETER
GYRO & MAGNETOMETER
ANALOG ACCELEROMETER
ACCEL SELF TEST
LED0
LED1
LED2
BTN_0
BTN_1
SWITCH_0
SWITCH_1
Berkeley Buckler
Branden Ghena
August 2018
3.3V
5V
GND
NC
GROVE_A1
GROVE_D0
GROVE_A2
ACCEL_X
ACCEL_Y
ACCEL_Z
SCL
SDA
GROVE_A0
SWITCH_1
SWITCH_0
BUTTON_1
BUTTON_0
SD_ENABLE
LED_2
GROVE_D1
LED_1
LED_0
SD_DETECT
SD_CS
LCD_CS
LIGHT_INT
IMU_INT
NFC2
NFC1
UART_RXD
UART_CTS
UART_TXD
UART_RTS
GROVE_D2
EXTERN_RX
QSPI_DIO3
QSPI_DIO1
QSPI_CLK
QSPI_CS
SD_MOSI
SD_MISO
SD_SCLK
EXTERN_TX
QSPI_DIO2
QSPI_DIO0
nRESET
LCD_MOSI
LCD_MISO
LCD_SCLK
3V3
RX
TX
SDA
SCL
D1
D0
D2
A1
A0
A2
J1
J3
J4
J5
J6
J7
J8

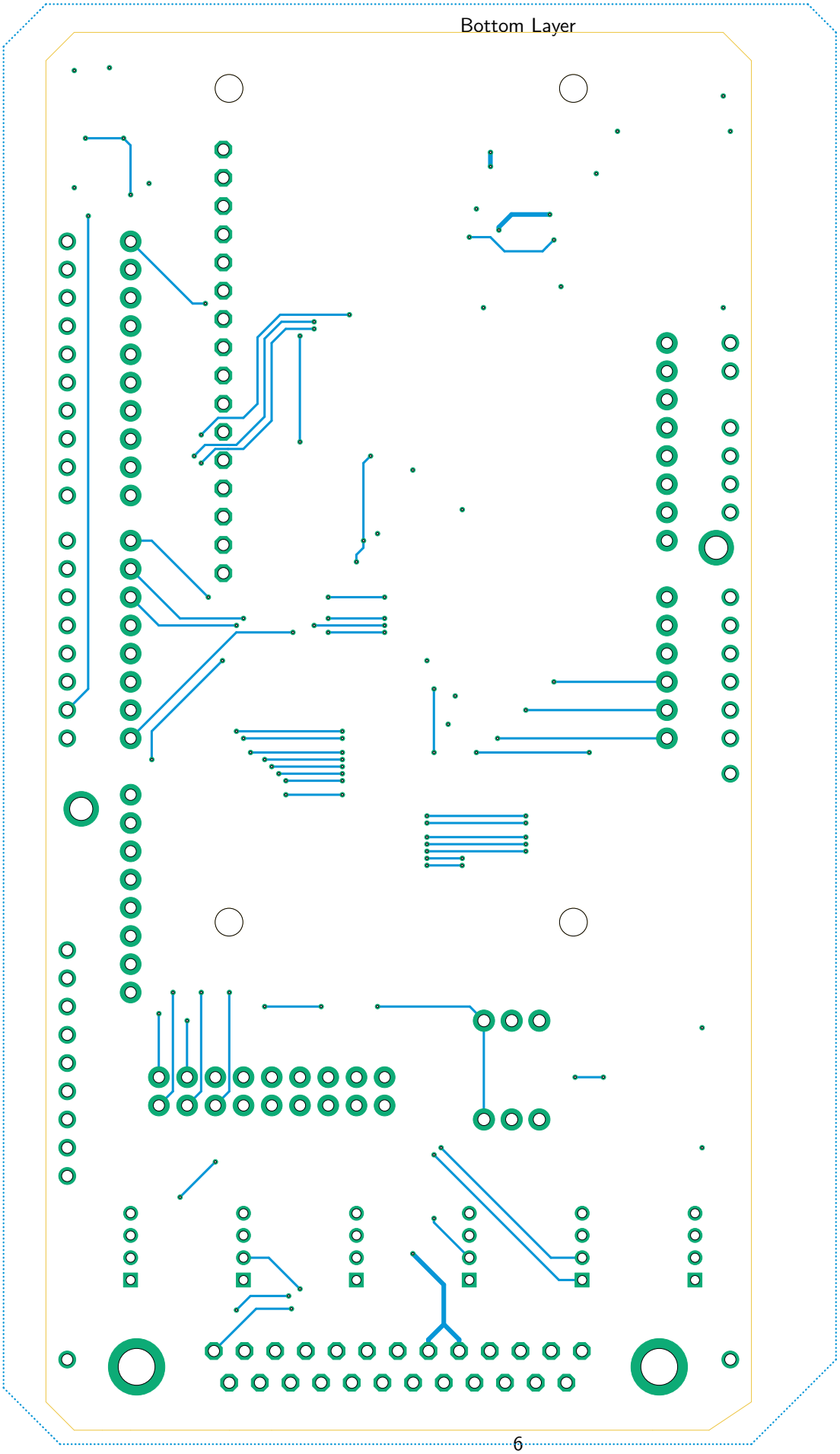
Bottom Layer

Top Copper Layer

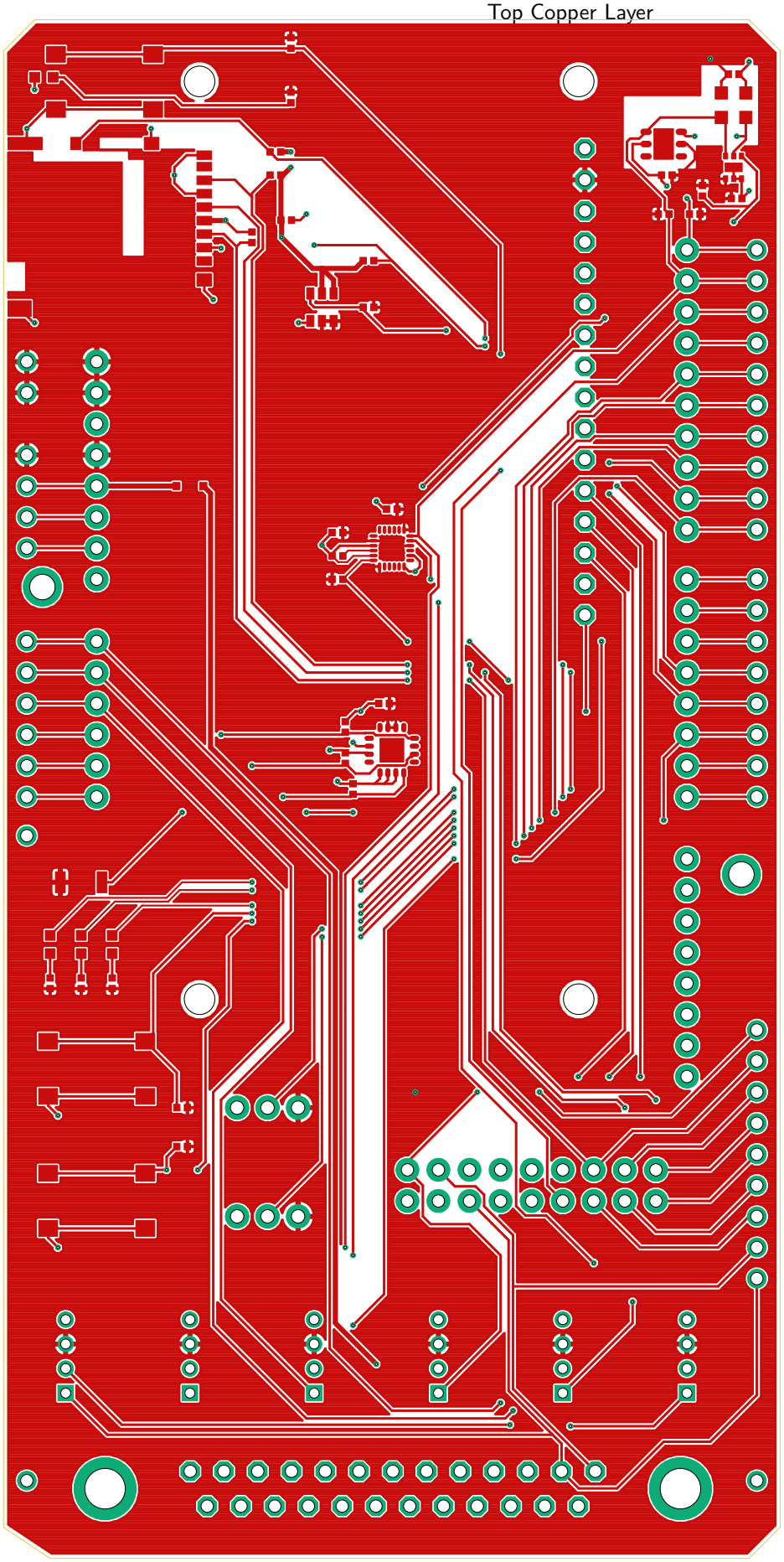

Bottom Copper Layer

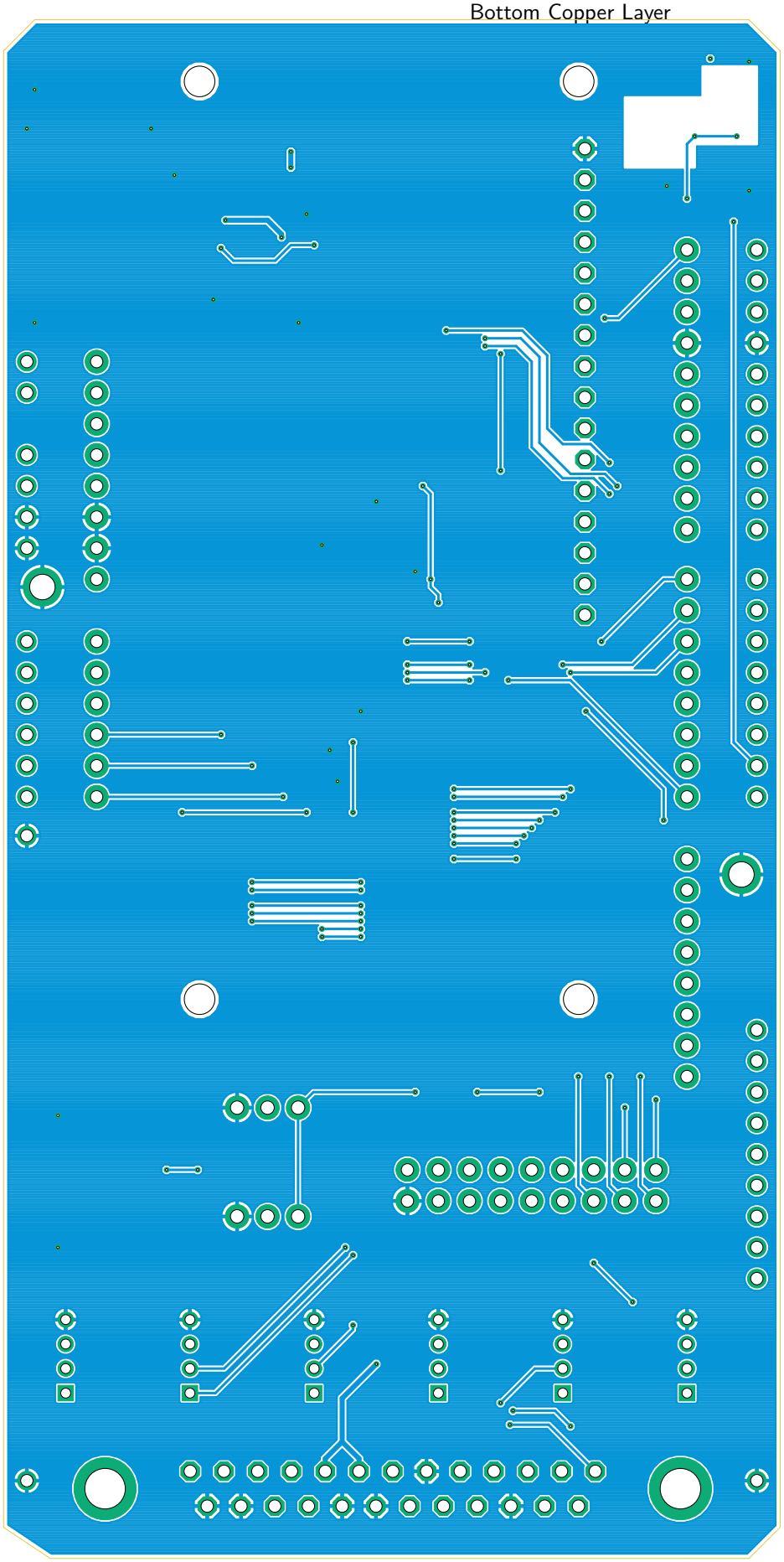

Top Paste Layer with Silkscreen

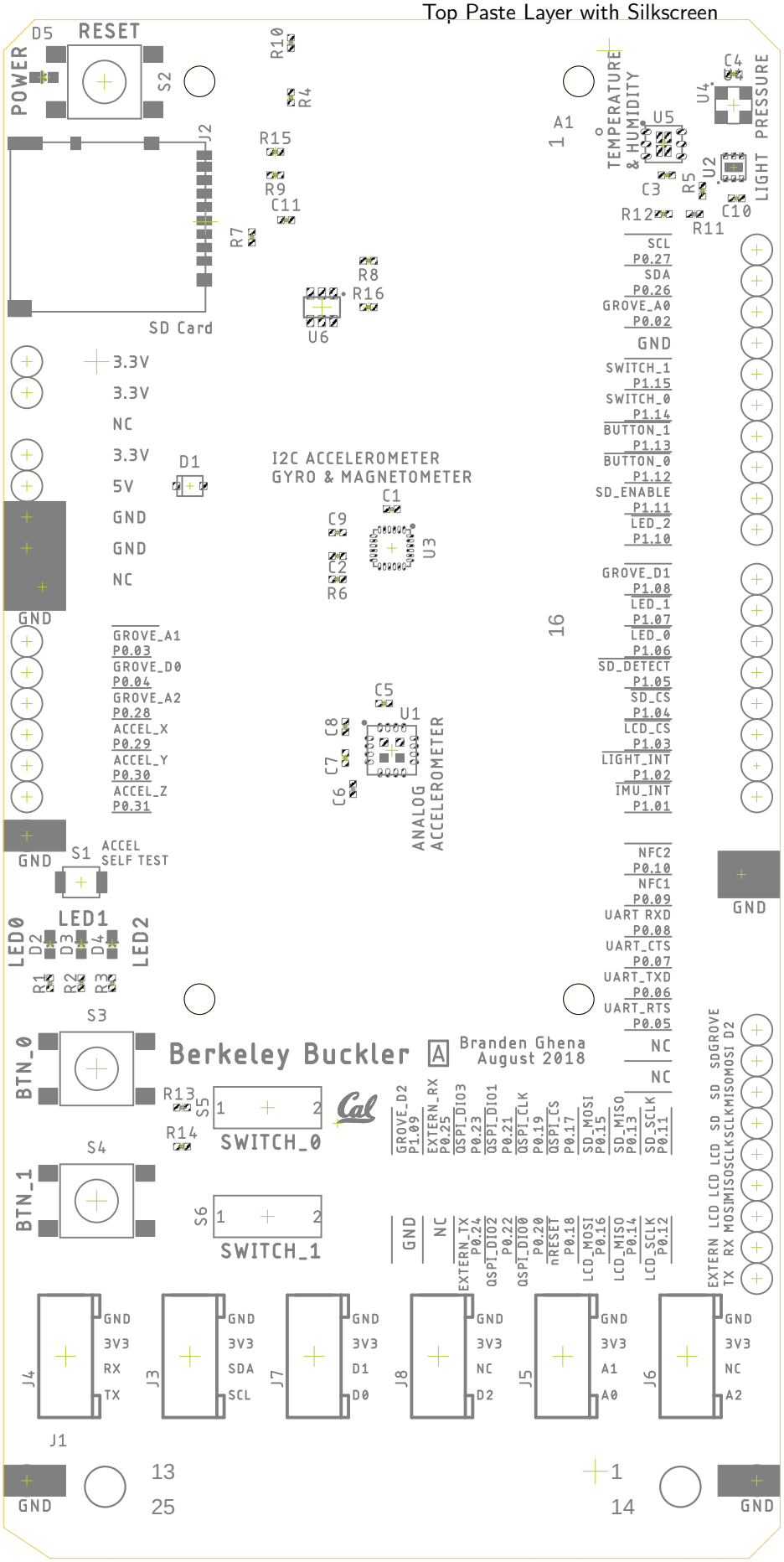

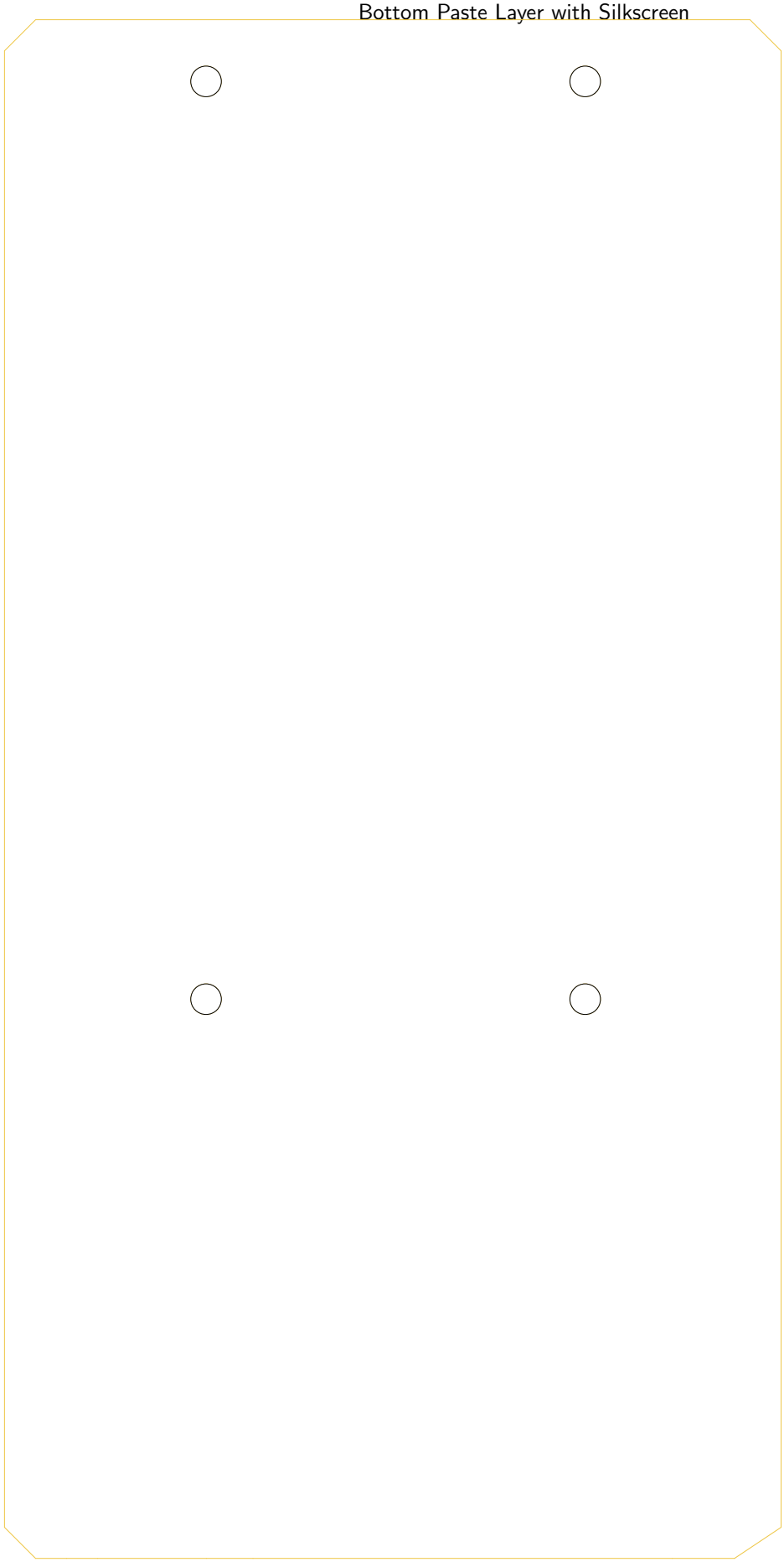

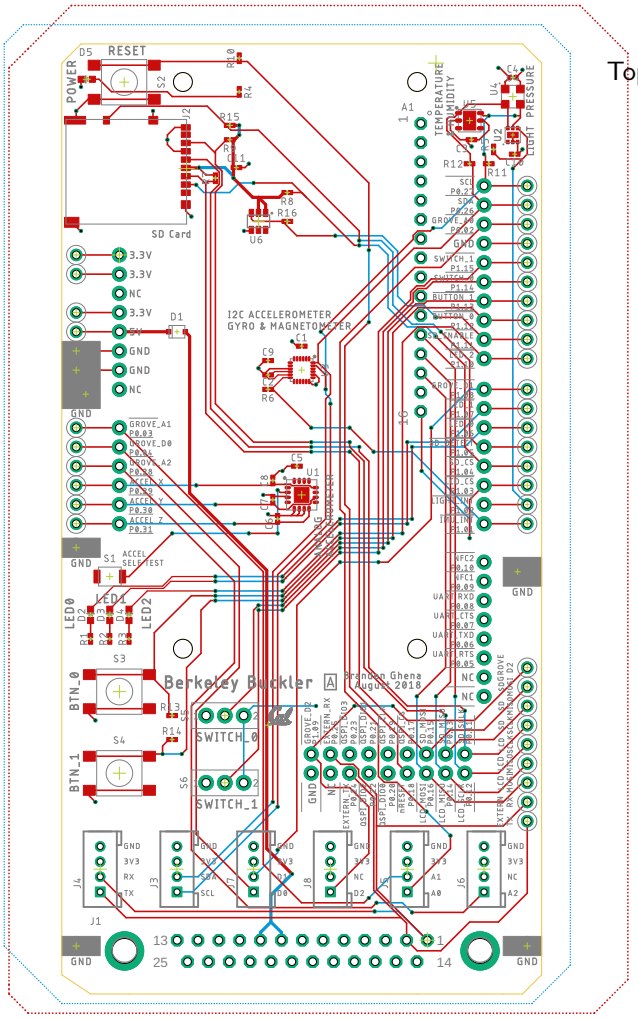

Top and Bottom Layers 1:1 Scale

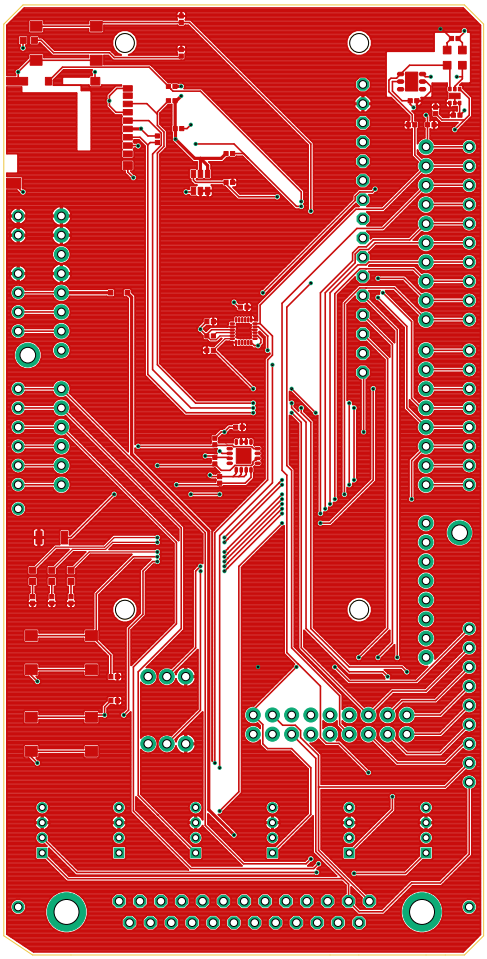

Top Layer 1:1 Scale

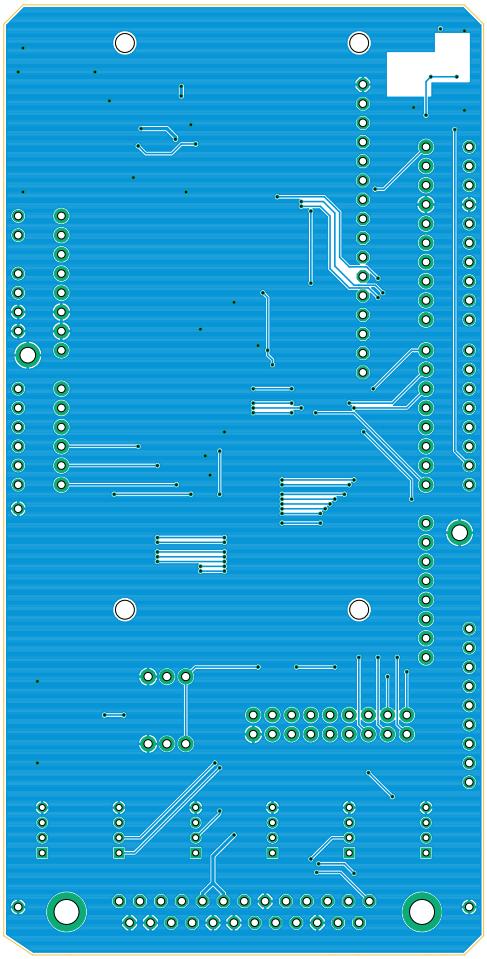

Bottom Copper Layer 1:1 Scale