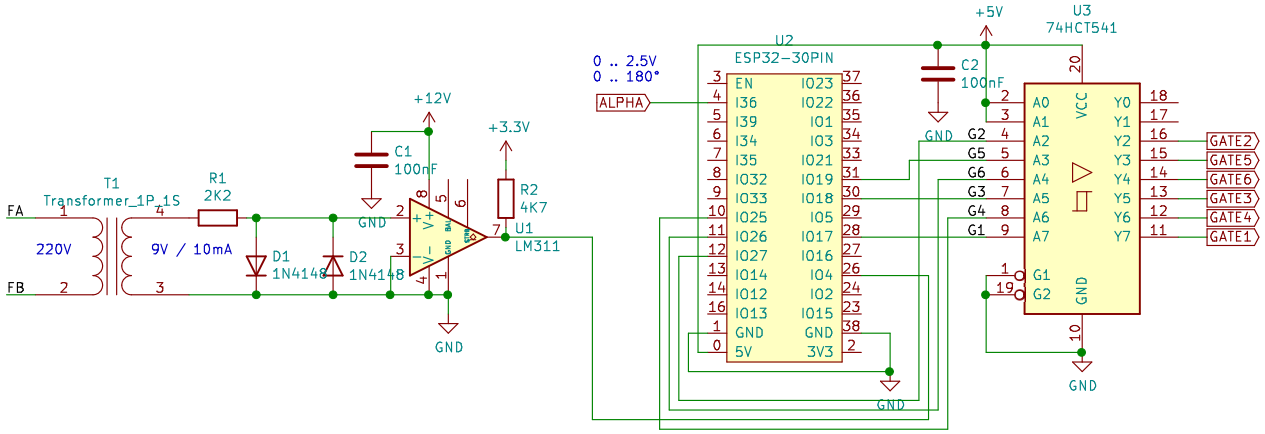

Power

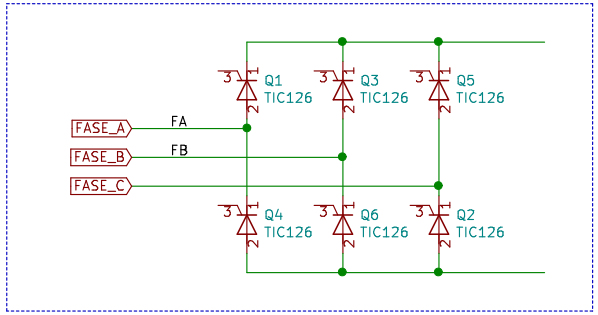

Gate Driver (amplifier and isolator)

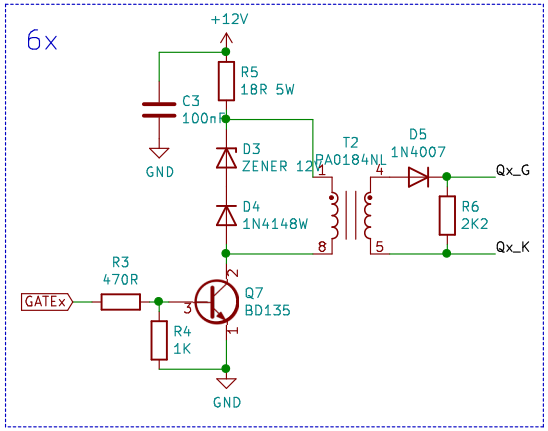

Sheet: /
File: connection1.sch

Title:

Size: A4	Date:	Rev:
KiCad E.D.A. kicad 5.1.9+dfsg1-1		Id: 1/1