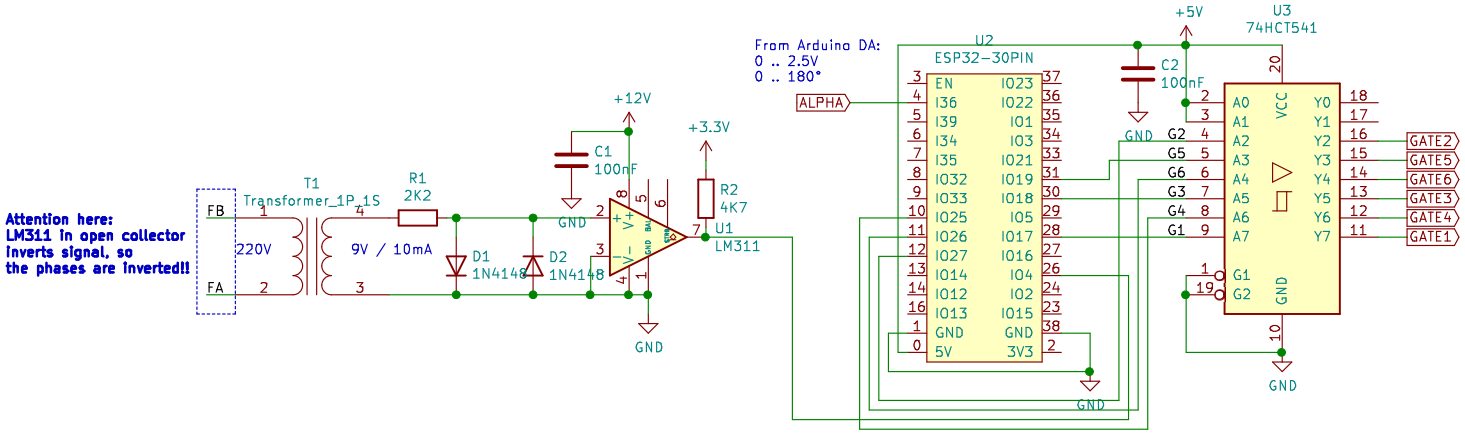

Power

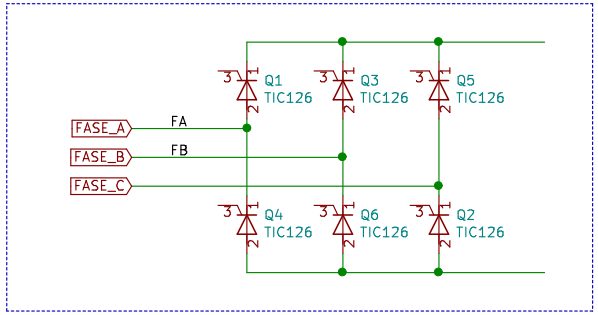

Gate Driver (amplifier and isolator)

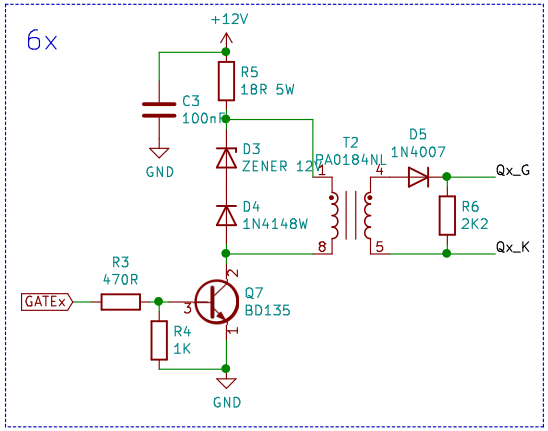

Sheet: /		
File: connection1.sch		
Title:		
Size: A4	Date:	**Rev:**
KiCad E.D.A. kicad 5.1.9+dfsg1-1		Id: 1/1