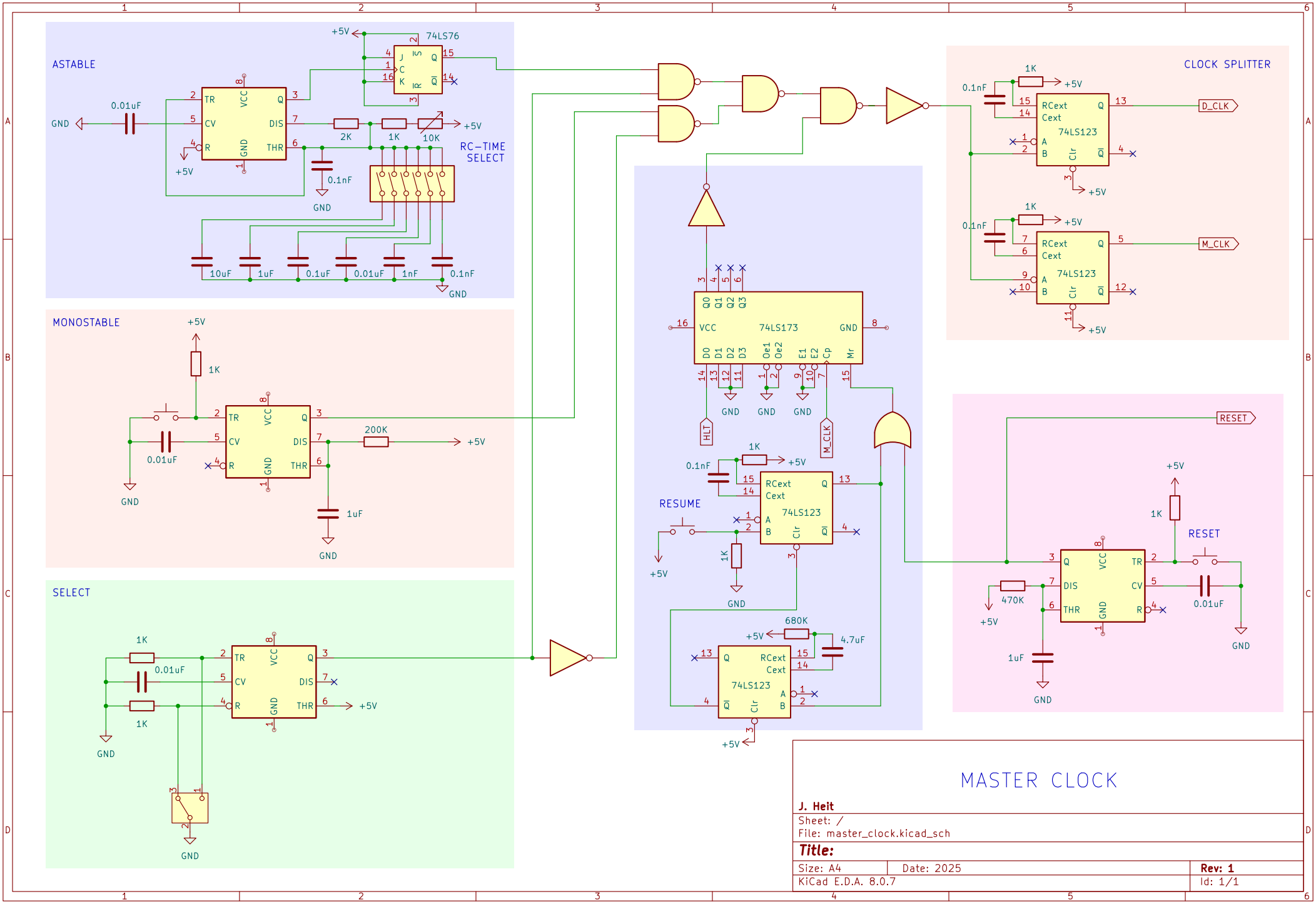
ASTABLE
74LS76
0.01uF
GND
+5V
2K
1K
10K
RC-TIME SELECT
0.1nF
10uF
1uF
0.1uF
0.01uF
1nF
0.1nF
MONOSTABLE
200K
SELECT
CLOCK SPLITTER
74LS123
D_CLK
M_CLK
74LS173
HLT
RESUME
680K
4.7uF
470K
RESET
MASTER CLOCK
J. Heit
Sheet: /
File: master_clock.kicad_sch
Title:
Size: A4
Date: 2025
Rev: 1
KiCad E.D.A. 8.0.7
Id: 1/1