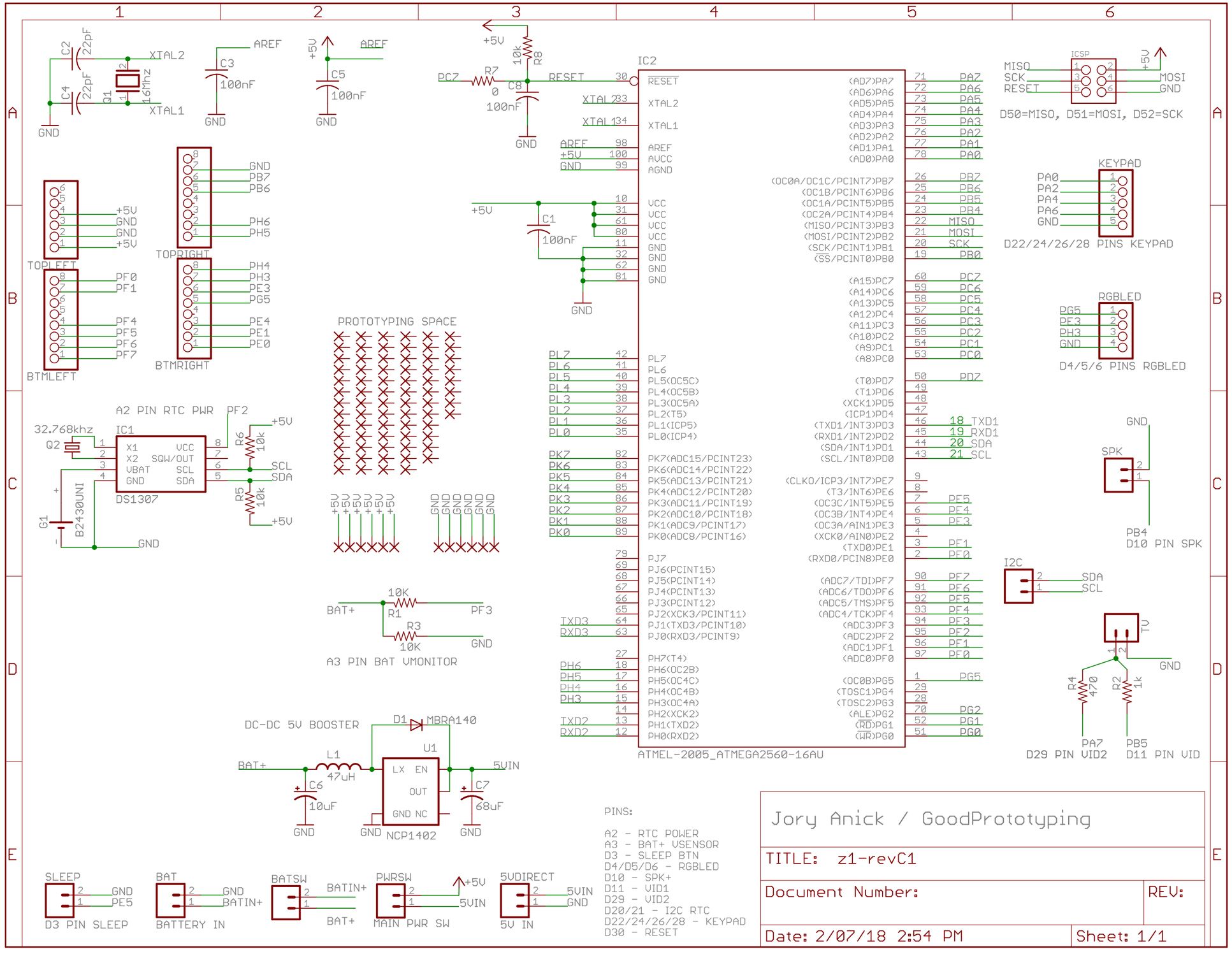
C2 22pF
C4 22pF
XTAL2
XTAL1
G1 16Mhz
GND
AREF
C3 100nF
C5 100nF
+5V
PC7
R7 0
R8 10k
C8 100nF
RESET
IC2
ATMEL-2005_ATMEGA2560-16AU
C1 100nF
TOPLEFT
TOPRIGHT
BTMLEFT
BTMRIGHT
PROTOTYPING SPACE
A2 PIN RTC PWR
PF2
32.768khz
Q2
IC1
DS1307
X1
X2
VBAT
GND
VCC
SQW/OUT
SCL
SDA
R6 10k
R5 10k
G1 B2430UNI
A3 PIN BAT VMONITOR
BAT+
R1 10K
R3 10K
PF3
DC-DC 5V BOOSTER
D1 MBRA140
U1
L1 47uH
C6 10uF
C7 68uF
LX EN
OUT
GND NC
NCP1402
5VIN
SLEEP
D3 PIN SLEEP
BAT
BATTERY IN
BATSW
BATIN+
PWRSW
MAIN PWR SW
5VDIRECT
5V IN
ICSP
MISO
SCK
RESET
MOSI
D50=MISO, D51=MOSI, D52=SCK
KEYPAD
PA0
PA2
PA4
PA6
D22/24/26/28 PINS KEYPAD
RGBLED
PG5
PE3
PH3
D4/5/6 PINS RGBLED
SPK
PB4
D10 PIN SPK
I2C
SDA
SCL
TV
R4 470
R2 1k
PA7
D29 PIN VID2
PB5
D11 PIN VID
PINS:
A2 - RTC POWER
A3 - BAT+ VSENSOR
D3 - SLEEP BTN
D4/D5/D6 - RGBLED
D10 - SPK+
D11 - VID1
D29 - VID2
D20/21 - I2C RTC
D22/24/26/28 - KEYPAD
D30 - RESET
Jory Anick / GoodPrototyping
TITLE: z1-revC1
Document Number:
REV:
Date: 2/07/18 2:54 PM
Sheet: 1/1