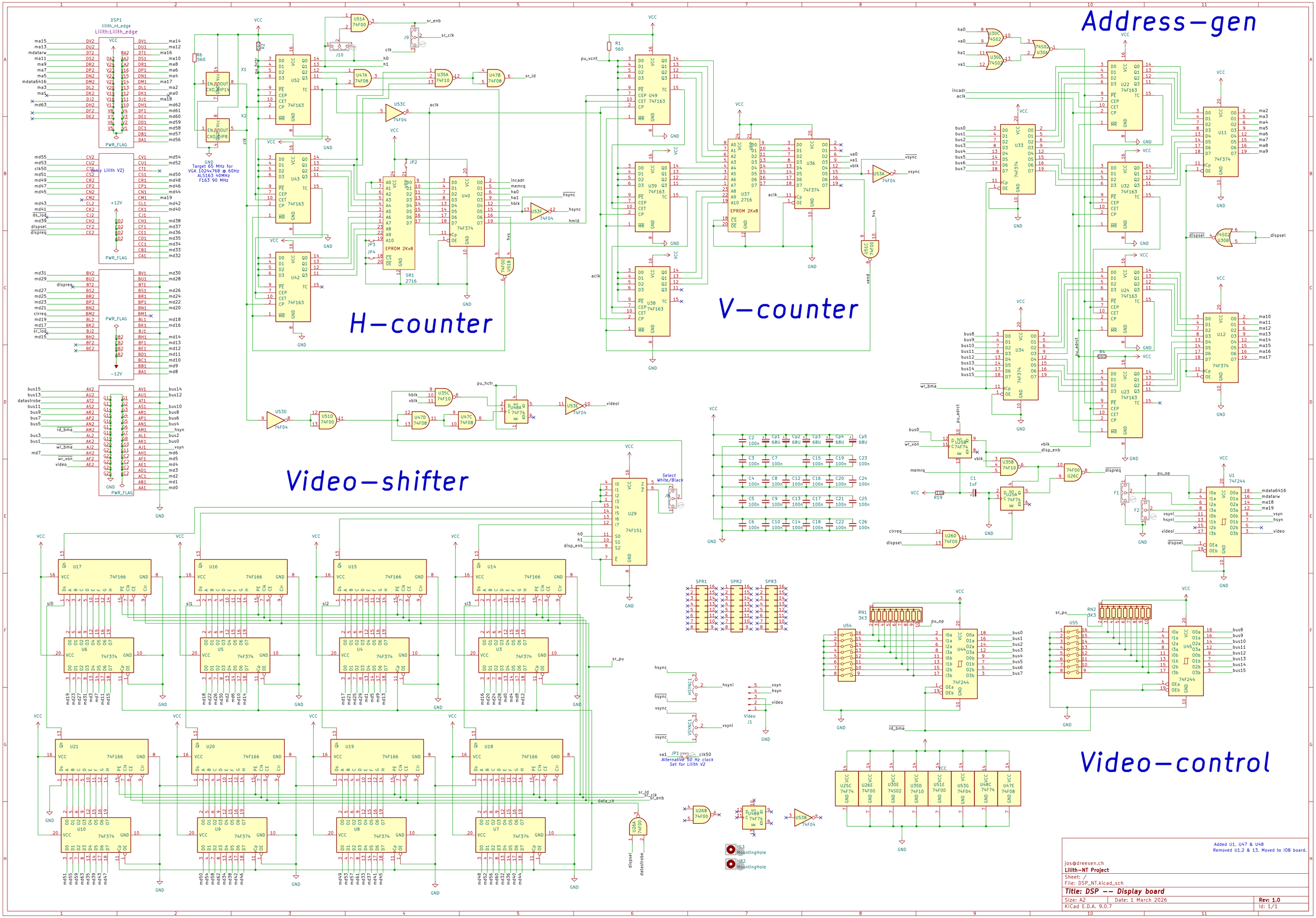
Address-gen
H-counter
V-counter
Video-shifter
Video-control
DSP1
lilith_nt_edge
Lilith:Lilith_edge
Target 65 MHz for
VGA 1024x768 @ 60Hz
ALS163 40MHz
F163 90 MHz
Alternative 50 Hz clock
Set for Lilith V2
Select
White/Black
Video
J1
Added U1, U47 & U48
Removed U1.2 & 13. Moved to IOB board.
jos@dreesen.ch
Lilith-NT Project
Sheet: /
File: DSP_NT.kicad_sch
Title: DSP -- Display board
Size: A2
Date: 1 March 2026
Rev: 1.0
KiCad E.D.A. 9.0.7
Id: 1/1