**Schematic**
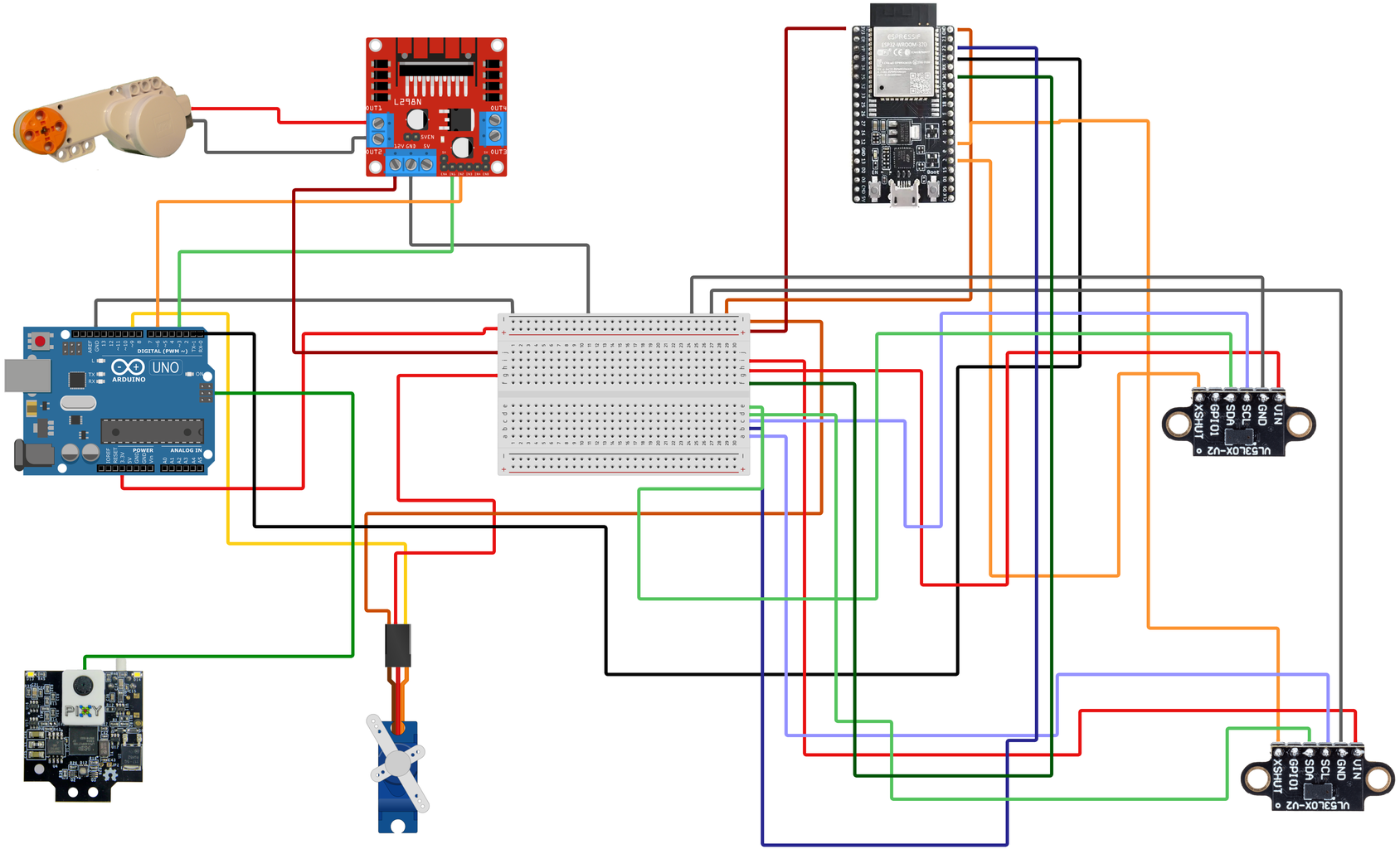
- Arduino Uno
- Breadboard
- H Bridge
- Motor NXT
- Servo Motor SG90
- VL53L0X
- ESP32 Wroom 32D
- Pixy2 Cam