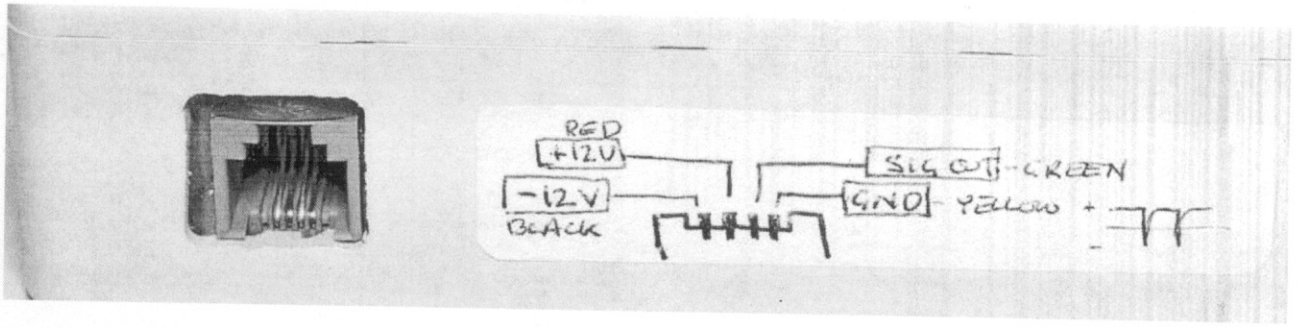

Background photographs from bealecorner.org

total parts count
5 transistors
8 diodes
11 resistors
14 capacitors
0 ICs
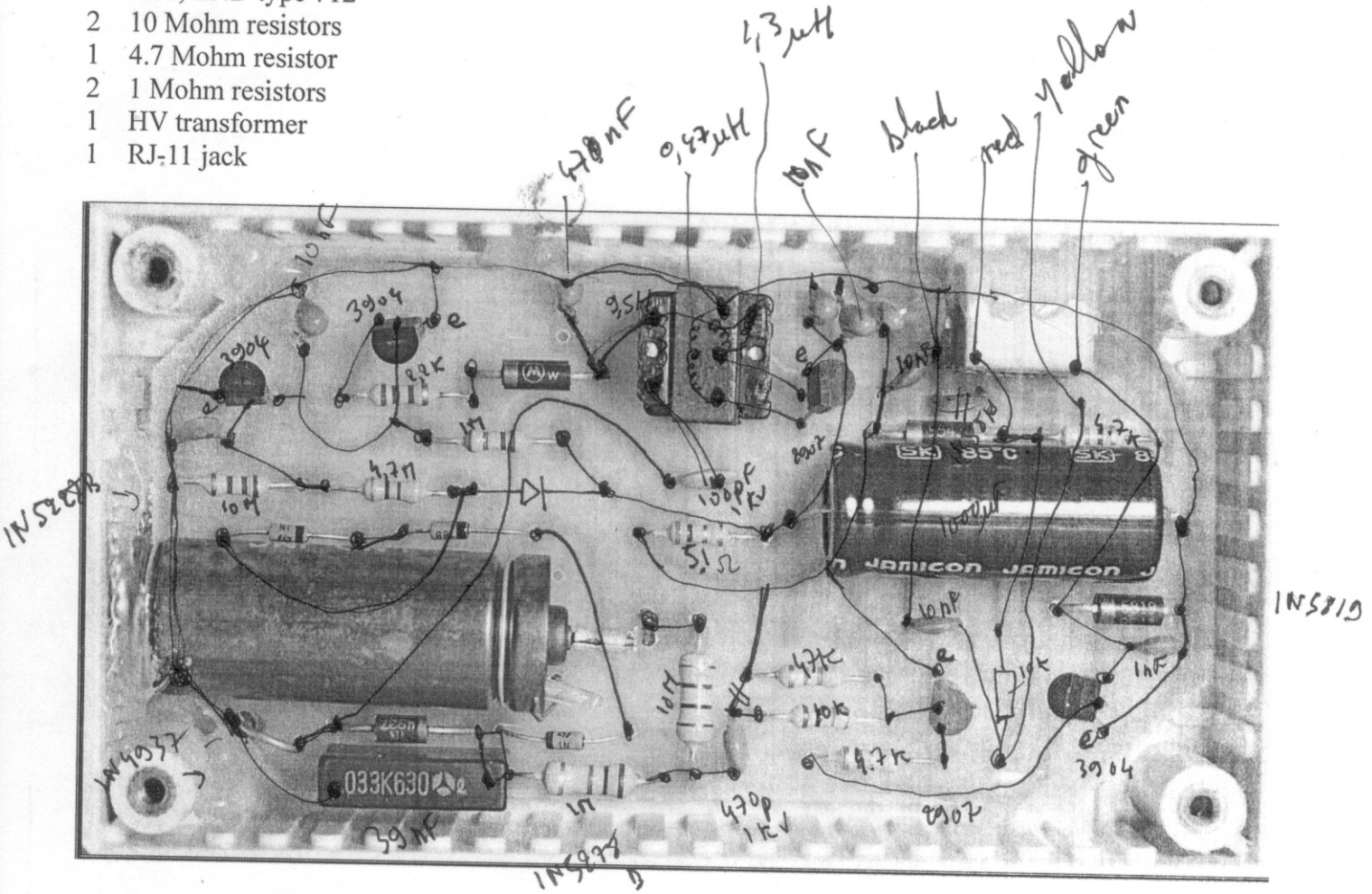
select parts of note
3 2N3904A NPN
2 KN2907 PNP
1 1000 uf 35 V
1 .033 uf square
1 100 pf, 1 kV
1 470 pf, 1 kV
1 tube, LND type 712
2 10 Mohm resistors
1 4.7 Mohm resistor
2 1 Mohm resistors
1 HV transformer
1 RJ-11 jack