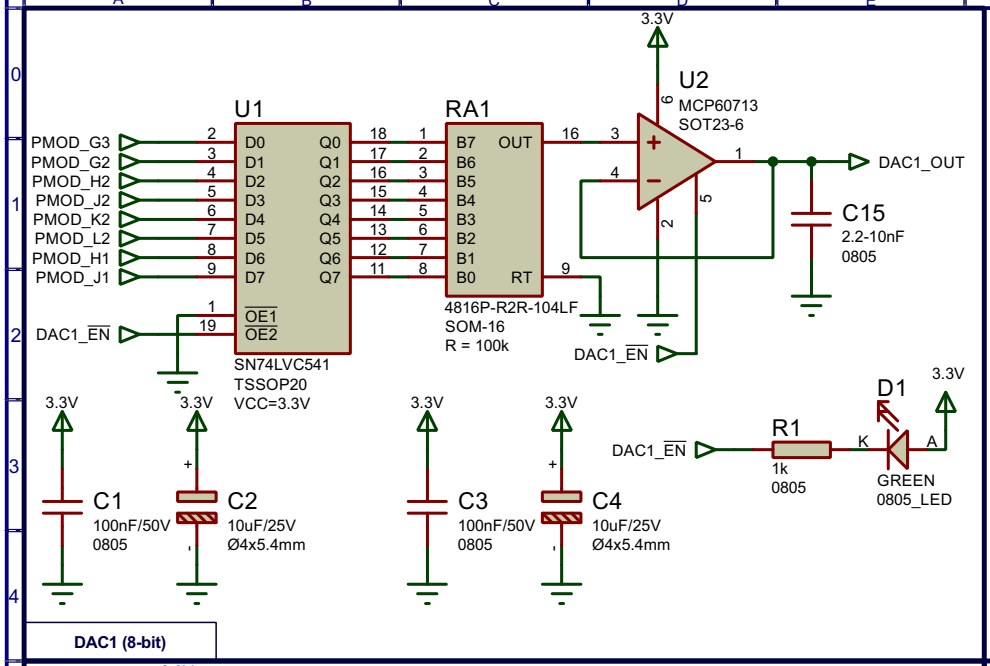

DAC1 (8-bit)

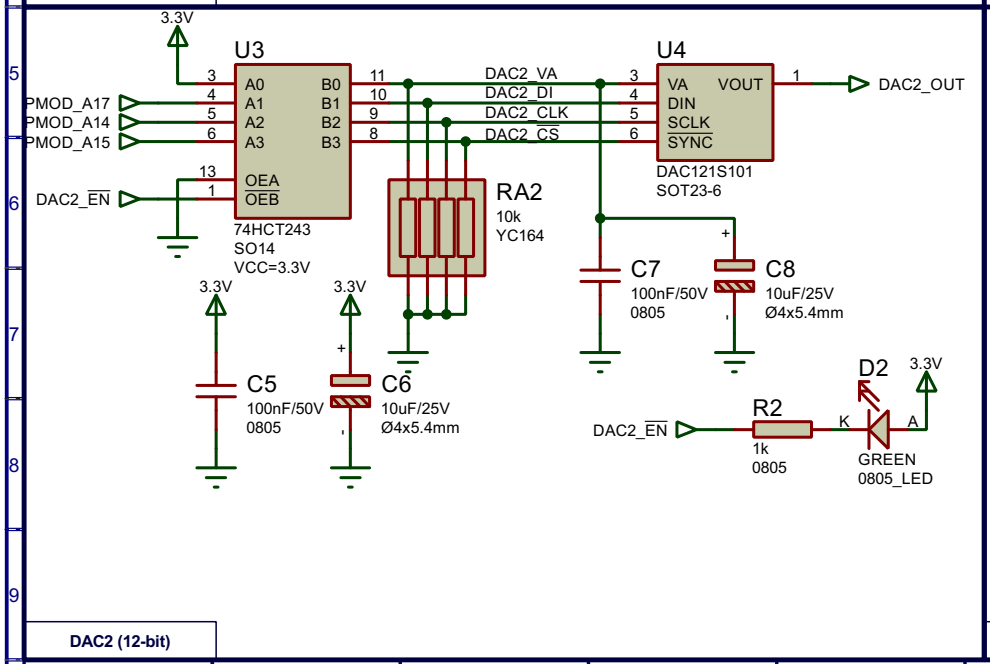

DAC2 (12-bit)

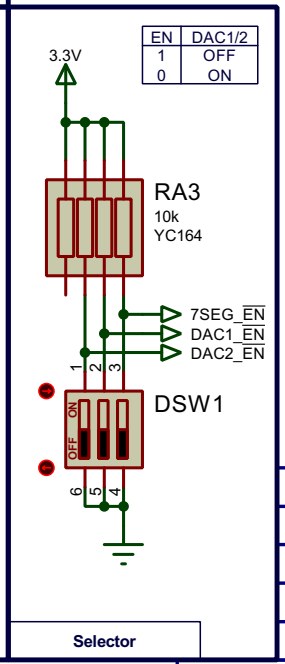

EN	DAC1/2
1	OFF
0	ON

Selector

FILE	BASYS3_Expansion.pdsprj	DATE	
TITLE	BASYS 3 Expansion Board	11/07/2026	
SHEET	DAC 1&2	PAGE	
		1 of 3	
BY	José Perry (GitHub: joseperry)	REV	v1.0

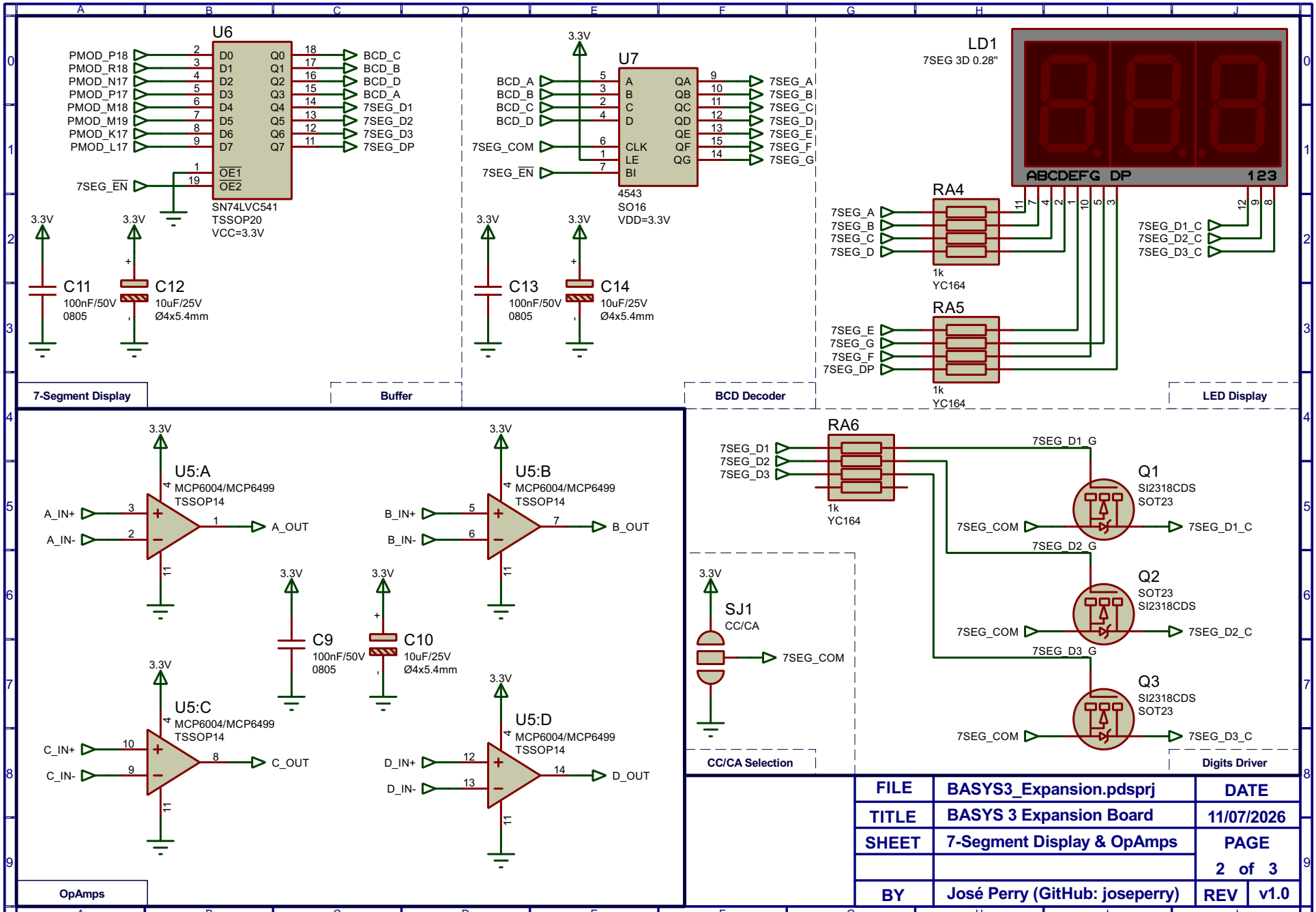
U6
PMOD_P18
PMOD_R18
PMOD_N17
PMOD_P17
PMOD_M18
PMOD_M19
PMOD_K17
PMOD_L17
7SEG_EN
D0 D1 D2 D3 D4 D5 D6 D7
Q0 Q1 Q2 Q3 Q4 Q5 Q6 Q7
OE1 OE2
BCD_C
BCD_B
BCD_D
BCD_A
7SEG_D1
7SEG_D2
7SEG_D3
7SEG_DP
SN74LVC541
TSSOP20
VCC=3.3V
3.3V
C11
100nF/50V
0805
C12
10uF/25V
Ø4x5.4mm
7-Segment Display
Buffer
U7
BCD_A
BCD_B
BCD_C
BCD_D
7SEG_COM
7SEG_EN
A B C D CLK LE BI
QA QB QC QD QE QF QG
7SEG_A
7SEG_B
7SEG_C
7SEG_D
7SEG_E
7SEG_F
7SEG_G
4543
SO16
VDD=3.3V
C13
100nF/50V
0805
C14
10uF/25V
Ø4x5.4mm
BCD Decoder
LD1
7SEG 3D 0.28"
ABCDEFG DP 123
RA4
RA5
1k
YC164
7SEG_D1_C
7SEG_D2_C
7SEG_D3_C
LED Display
U5:A
U5:B
U5:C
U5:D
MCP6004/MCP6499
TSSOP14
A_IN+
A_IN-
A_OUT
B_IN+
B_IN-
B_OUT
C_IN+
C_IN-
C_OUT
D_IN+
D_IN-
D_OUT
C9
100nF/50V
0805
C10
10uF/25V
Ø4x5.4mm
OpAmps
RA6
7SEG_D1
7SEG_D2
7SEG_D3
7SEG_D1_G
7SEG_D2_G
7SEG_D3_G
Q1
Q2
Q3
SI2318CDS
SOT23
7SEG_COM
SJ1
CC/CA
CC/CA Selection
Digits Driver
FILE
BASYS3_Expansion.pdsprj
DATE
TITLE
BASYS 3 Expansion Board
11/07/2026
SHEET
7-Segment Display & OpAmps
PAGE
2 of 3
BY
José Perry (GitHub: joseperry)
REV
v1.0

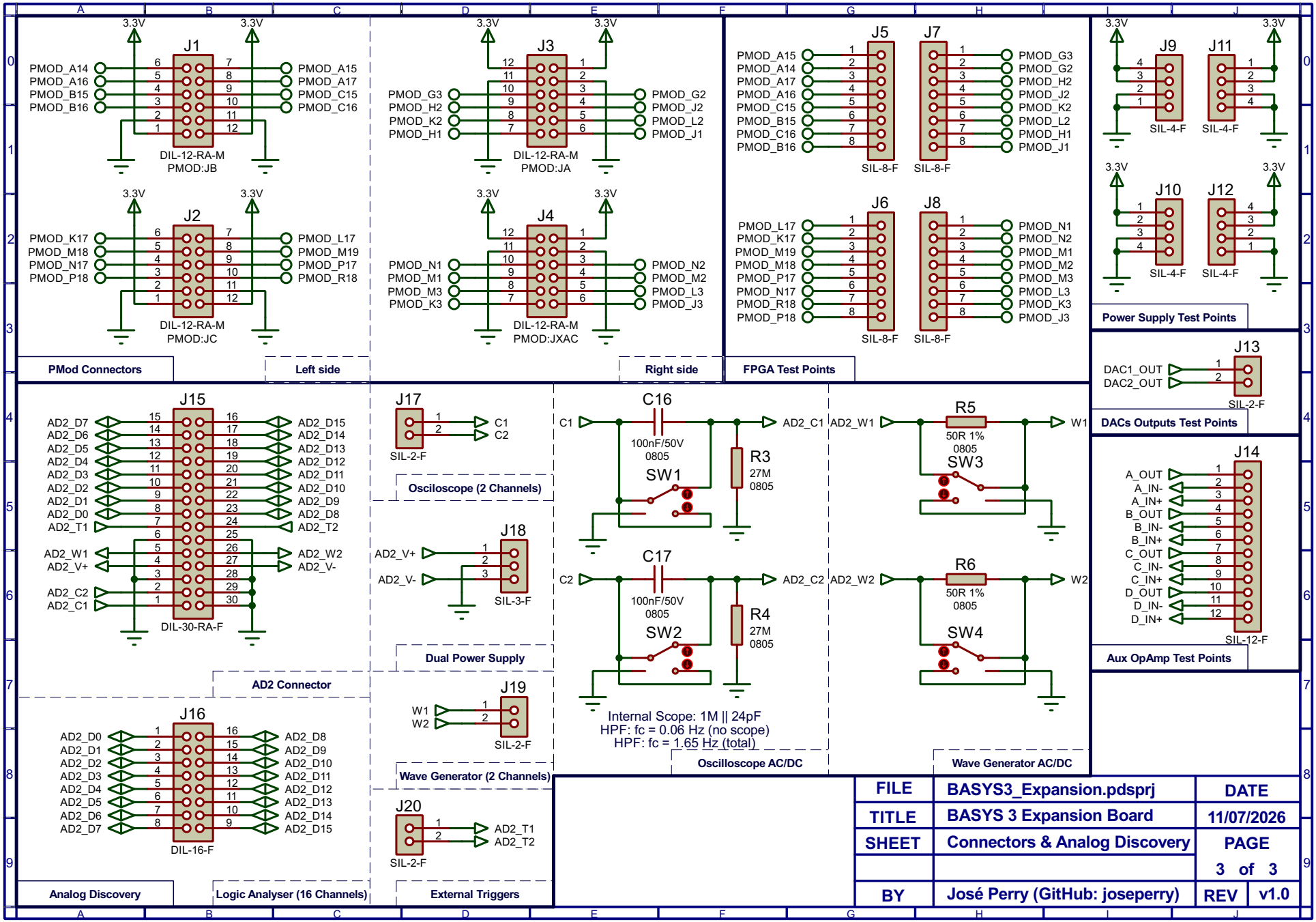
J1
PMOD_A14
PMOD_A16
PMOD_B15
PMOD_B16
PMOD_A15
PMOD_A17
PMOD_C15
PMOD_C16
DIL-12-RA-M
PMOD:JB
J2
PMOD_K17
PMOD_M18
PMOD_N17
PMOD_P18
PMOD_L17
PMOD_M19
PMOD_P17
PMOD_R18
DIL-12-RA-M
PMOD:JC
PMOD Connectors
Left side
J3
PMOD_G3
PMOD_H2
PMOD_K2
PMOD_H1
PMOD_G2
PMOD_J2
PMOD_L2
PMOD_J1
DIL-12-RA-M
PMOD:JA
J4
PMOD_N1
PMOD_M1
PMOD_M3
PMOD_K3
PMOD_N2
PMOD_M2
PMOD_L3
PMOD_J3
DIL-12-RA-M
PMOD:JXAC
Right side
J5
J7
J6
J8
PMOD_A15
PMOD_A14
PMOD_A17
PMOD_A16
PMOD_C15
PMOD_B15
PMOD_C16
PMOD_B16
PMOD_G3
PMOD_G2
PMOD_H2
PMOD_J2
PMOD_K2
PMOD_L2
PMOD_H1
PMOD_J1
PMOD_L17
PMOD_K17
PMOD_M19
PMOD_M18
PMOD_P17
PMOD_N17
PMOD_R18
PMOD_P18
PMOD_N1
PMOD_N2
PMOD_M1
PMOD_M2
PMOD_M3
PMOD_L3
PMOD_K3
PMOD_J3
SIL-8-F
FPGA Test Points
J9
J11
J10
J12
SIL-4-F
Power Supply Test Points
J13
DAC1_OUT
DAC2_OUT
SIL-2-F
DACs Outputs Test Points
J14
A_OUT
A_IN-
A_IN+
B_OUT
B_IN-
B_IN+
C_OUT
C_IN-
C_IN+
D_OUT
D_IN-
D_IN+
SIL-12-F
Aux OpAmp Test Points
J15
AD2_D7
AD2_D6
AD2_D5
AD2_D4
AD2_D3
AD2_D2
AD2_D1
AD2_D0
AD2_T1
AD2_W1
AD2_V+
AD2_C2
AD2_C1
AD2_D15
AD2_D14
AD2_D13
AD2_D12
AD2_D11
AD2_D10
AD2_D9
AD2_D8
AD2_T2
AD2_W2
AD2_V-
DIL-30-RA-F
AD2 Connector
J17
C1
C2
SIL-2-F
Osciloscope (2 Channels)
J18
AD2_V+
AD2_V-
SIL-3-F
Dual Power Supply
J19
W1
W2
SIL-2-F
Wave Generator (2 Channels)
J20
AD2_T1
AD2_T2
SIL-2-F
External Triggers
J16
AD2_D0
AD2_D1
AD2_D2
AD2_D3
AD2_D4
AD2_D5
AD2_D6
AD2_D7
AD2_D8
AD2_D9
AD2_D10
AD2_D11
AD2_D12
AD2_D13
AD2_D14
AD2_D15
DIL-16-F
Analog Discovery
Logic Analyser (16 Channels)
C16
100nF/50V
0805
SW1
R3
27M
0805
AD2_C1
C17
100nF/50V
0805
SW2
R4
27M
0805
AD2_C2
Internal Scope: 1M || 24pF
HPF: fc = 0.06 Hz (no scope)
HPF: fc = 1.65 Hz (total)
Oscilloscope AC/DC
R5
50R 1%
0805
SW3
W1
R6
50R 1%
0805
SW4
W2
Wave Generator AC/DC
FILE
BASYS3_Expansion.pdsprj
DATE
TITLE
BASYS 3 Expansion Board
11/07/2026
SHEET
Connectors & Analog Discovery
PAGE
3 of 3
BY
José Perry (GitHub: joseperry)
REV
v1.0